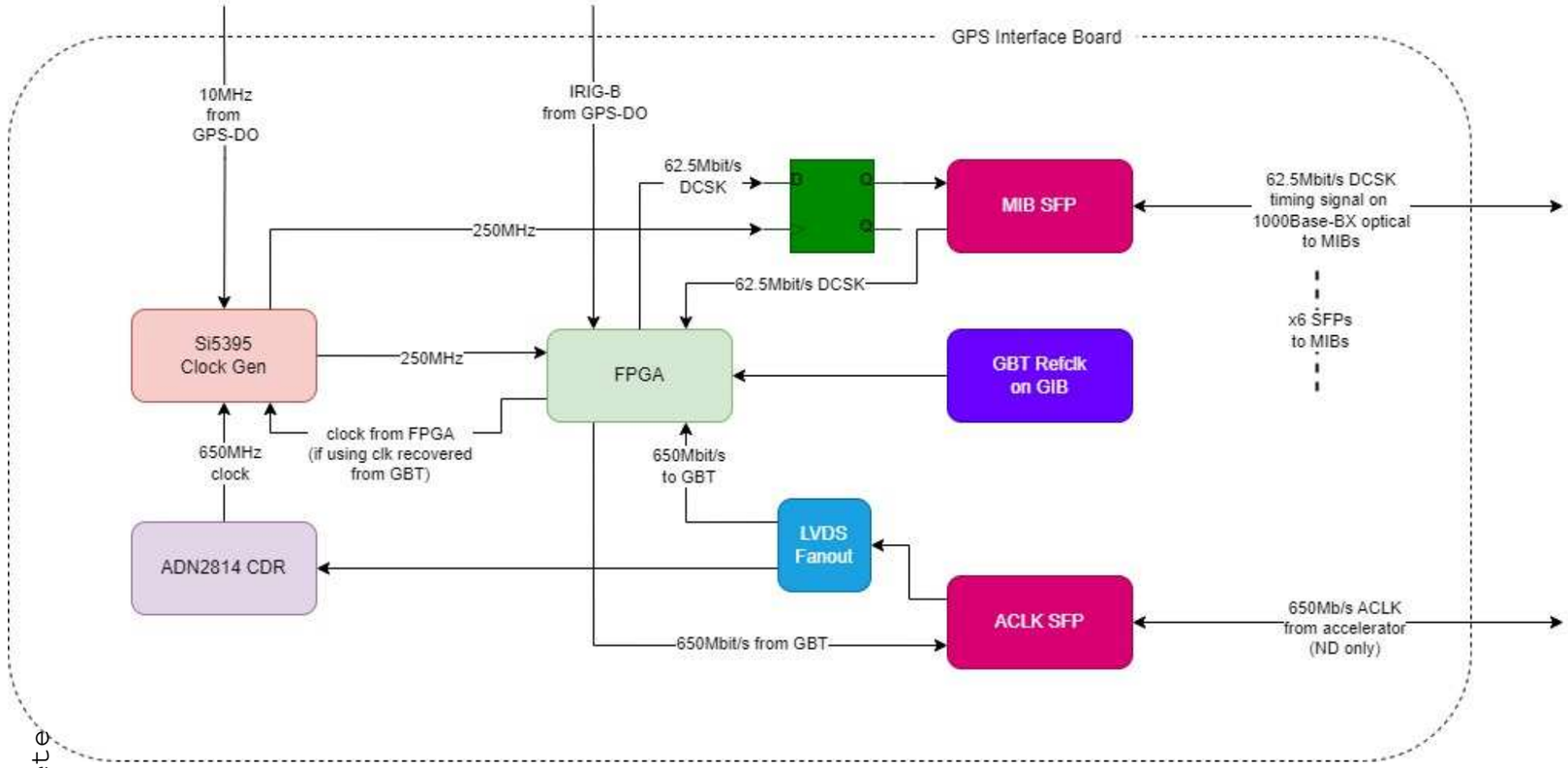

Part	I2C Address
ACLK SFP	0x50
ACLK CDR	0x40
SFP 1	0x50
SFP 2	
SFP 3	
SFP 4	
SFP 5	
SFP 6	

Part	I2C Address
Board ID EEPROM	0x54
SI5395 Clock Gen.	0x68
I2C Extender 1	0x74
I2C Extender 2	0x75
VCC5V Power Monitor	0x67
VCC3V3 Power Monitor	0x6A
VCC2V5 Power Monitor	0x69
I2C Switch	0x70
Temperature Monitor	0x48

This power consumption table is obsolete
Update/Remove

Power Estimate			Max Current (mA)				
Part	Description	Occurence	VCC5V	VCC3V3	VCC2V5	VCC1V8	12V Main PWR
LTC6957-2	Sine Wave to LVDS	1		72			
MAX9371	Low Jitter 5V TTL to LVDS	2	16				
SN74avc2t45	5V <--> 3.3V	1	100	100			
SN74avc2t45	3.3V <--> 2.5V	5		100	100		
SI5395	Clock Generator	1		302		300	
LTC2945	Power Monitor	4	1.2				
24AA025E48T	Board ID EEPROM	1		3			
LEDs		13		20			
NB7V52M	Diff. Flip-Flop	6			90		
ADN2814	CDR	6		145			
SFP		6		280			
SN74lvc1g32	OR Gate	12		100			
PCA9539	I2C Extender	2		160			
TCA9548A	I2C Switch	1			100		
LM75A	Temp Monitor	1		20			
NC7SZ08	AND Gate	1		50			
SN65LVDM176	LVDS Transceiver	2		15			
TXB0104(6)	Level Translator	2		100	100		
	Totals	Current (A)	0.14	5.41	1.14	0.30	
		Power (W)	0.68	17.84	3.76	0.54	22.83
	Max Power Supply	Current (A)	2	8			4
		Power (W)	11	28			48

UNIVERSITY OF PENNSYLVANIA
HIGH ENERGY PHYSICS
209 S 33rd Street
Philadelphia PA 19104

Design Title: GPS Interface Board
Schematic Title: 00. GIB Top
Page Title: 01. Address Table

Size	Date:	Document Number:	Rev
B	Monday, July 07, 2025	<Doc>	<RevCode>
Designer: Jon Sensenig		Sheet: 1 of 23	

VCCIO (2.5V or 3.3V) is set on the Enclustra PM3 board using a DIP switch.
The GIB requires 2.5V!

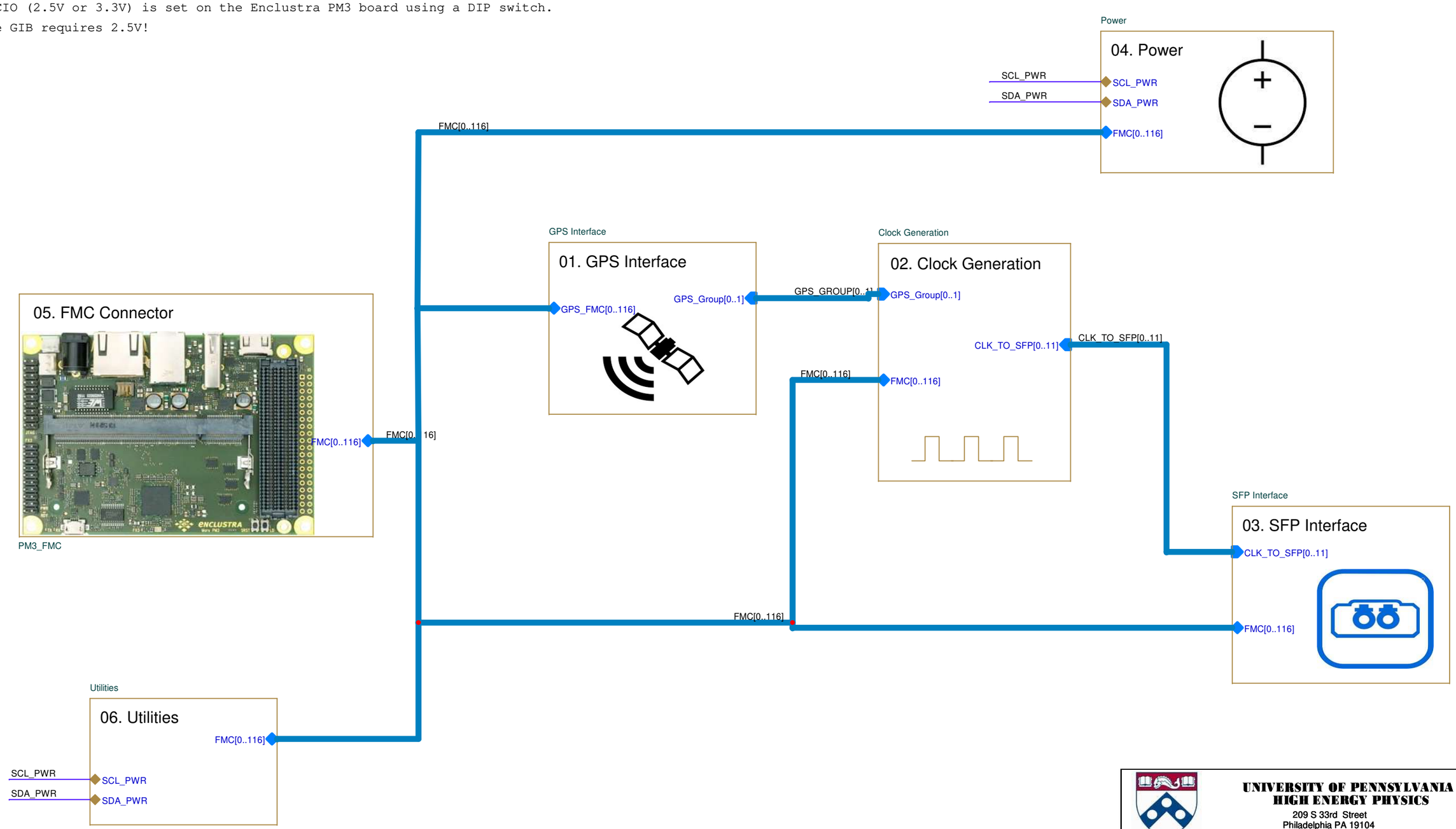

UNIVERSITY OF PENNSYLVANIA
HIGH ENERGY PHYSICS
209 S 33rd Street
Philadelphia PA 19104

Design Title:	GPS Interface Board
Schematic Title:	00. GIB Top
Page Title:	02. Top Level

Size	Date:	Document Number:	Rev
B	Tuesday, July 08, 2025		
Designer: Jon Sensenig		Sheet: 2 of 23	

Sine Wave to LVDS

Disconnect FILTER_A, FILTER_B , GPS_CLK_EN
(Re-use for IRIG???)

10MHz Clock

J1 SIG 1 GPS_CLK_IN
SH1 SH2 SH3 S1 S2 2 BNC/R
R3704 49.9 Ohm
C3721 0.1UF 25V
R3702 1k
R3703 1k
C3726 0.1UF 25V
C3719 0.1UF 25V
R3701 1k
VCC5V_LFILT
C3720 0.1UF 25V
C3727 0.1UF 25V
-IN VCCI/VCCO *Q +IN VEE Q
LTC6754ISC6TRMPBF U108
gps_clk_lvds_n
gps_clk_lvds_p
VCC3V3
U1107 SY58608UMG
IN VT IN VREF-AC EP
VCC_1 VCC_2 VCC_3 VCC_4 GND_1 GND_2 GND_3 GND_4
Q0 Q0 Q1 Q1
GPS_CLK_OUT_P
GPS_CLK_OUT_N
GPS_GROUP[0..1]
GPS_GROUP.GPS_CLK_P
GPS_GROUP.GPS_CLK_N
GPS_GROUP[0..1]
NetGroup
GPS_Group[0..1]
VCC3V3
C3722 0.1UF 25V
C3723 0.1UF 25V
C3724 1000PF 50V
C3725 1000PF 50V
GPS_CLK_COPY_P
GPS_CLK_COPY_N

IRIG-B

J4 SIG 1 GPS_IRIGB_IN
SH1 SH2 SH3 S1 S2 2 BNC/R
R3705 DNP
VCC5V_LFILT
VCC3V3 VCC5V VCC2V5
5V Input
3.3V Input
R265 ZERO
R266 DNP
Only stuff *one* of resistors supplying VCCA
C5 0.1UF
R10 1k
C6 0.1UF
U47 SN74LVC2T45DCU
VCCA VCCB A1 A2 DIR GND B1 B2
High A --> B ?
IC?

1 PPS

J5 SIG 1 GPS_PPS_IN
SH1 SH2 SH3 S1 S2 2 BNC/R
R3706 49.9 Ohm
U2 MAX9371ESA
VCC D Q Q NC1 NC2 NC3 GND
PPS_OUT_P
PPS_OUT_N
R11 133
R12 133
R13 68
R14 68

SYNC

J6 SIG 1 GPS_SYNC_IN
SH1 SH2 SH3 S1 S2 2 BNC/R
R3707 49.9 Ohm
U3 MAX9371ESA
VCC5V_LFILT
VCC D Q Q NC1 NC2 NC3 GND
SYNC_OUT_P
SYNC_OUT_N
R15 133
R16 133
R17 68
R18 68

Voltage divide PECL down to LVDS.

FMC[0..116] NetGroup
FMC.GPS_CLK_COPY_P
FMC.GPS_CLK_COPY_N
FMC[0..116]
GPS_FMC[0..116]
FMC.GPS_IRIGB
FMC.GPS_PPS_P
FMC.GPS_PPS_N
FMC.GPS_SYNC_OUT_P
FMC.GPS_SYNC_OUT_N

Translator Power Filtering

VCC5V
C10 10UF 10V
120 Ohm@100MHz L2 1 2
C11 0.1UF 25V
C12 10UF 10V
VCC5V_LFILT

GPS BNC Connectors

Use RA BNC Conn. TE 1-1634612-0

---------- Level Translators ----------

UNIVERSITY OF PENNSYLVANIA
HIGH ENERGY PHYSICS
209 S 33rd Street
Philadelphia PA 19104

Design Title:	GPS Interface Board
Schematic Title:	01. GPS Interface
Page Title:	03. GPS Interface

Size	Date:	Document Number:	Rev
B	Thursday, August 21, 2025	<Doc>	<RevCode>
Designer: Jon Sensenig		Sheet: 3 of 23	

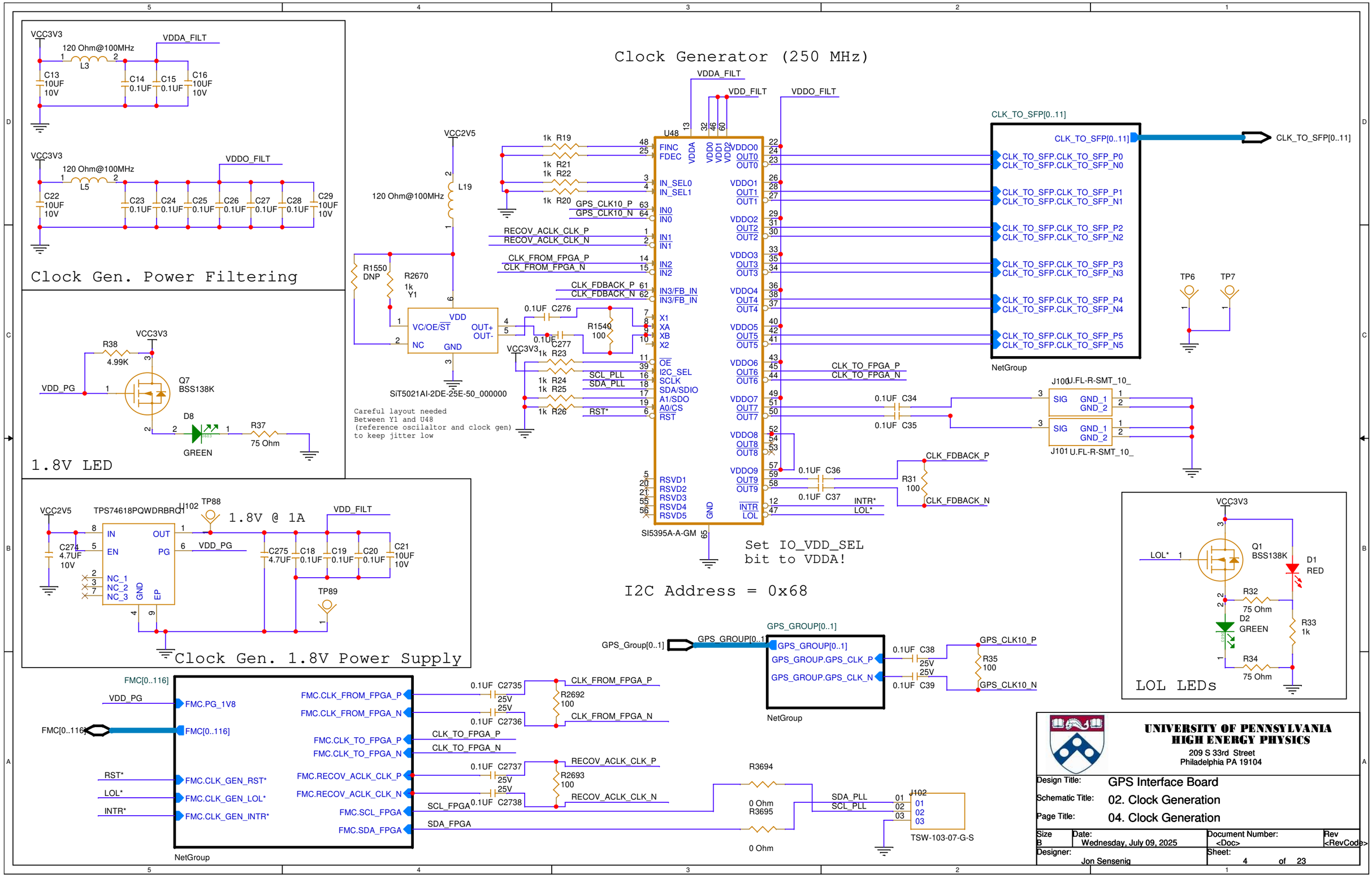
Clock Generator (250 MHz)
Clock Gen. Power Filtering
VCC3V3
120 Ohm@100MHz
L3
VDDA_FILT
C13 10UF 10V
C14 0.1UF
C15 0.1UF
C16 10UF 10V
L5
VDDO_FILT
C22 10UF 10V
C23 0.1UF
C24 0.1UF
C25 0.1UF
C26 0.1UF
C27 0.1UF
C28 0.1UF
C29 10UF 10V
1.8V LED
R38 4.99K
VDD_PG
Q7 BSS138K
D8 GREEN
R37 75 Ohm
Clock Gen. 1.8V Power Supply
VCC2V5
TPS74618PQWDRBRQ1
U102
TP88
1.8V @ 1A
VDD_FILT
C274 4.7UF 10V
C275 4.7UF
C18 0.1UF
C19 0.1UF
C20 0.1UF
C21 10UF 10V
TP89
IN
EN
OUT
PG
NC_1
NC_2
NC_3
GND
EP
VDD_PG
L19
R1550 DNP
R2670 1k
Y1
VDD
VC/OE/ST
OUT+
OUT-
NC
GND
SiT5021AI-2DE-25E-50_000000
Careful layout needed
Between Y1 and U48
(reference oscilaltor and clock gen)
to keep jitter low
U48
VDDA_FILT
VDD_FILT
VDDO_FILT
FINC
FDEC
VDDA
VDD0
VDD1
VDD2
IN_SEL0
IN_SEL1
IN0
IN1
IN2
IN3/FB_IN
X1
XA
XB
X2
OE
I2C_SEL
SCLK
SDA/SDIO
A1/SDO
A0/CS
RST
RSVD1
RSVD2
RSVD3
RSVD4
RSVD5
GND
SI5395A-A-GM
1k R19
1k R21
1k R22
1k R20
GPS_CLK10_P
GPS_CLK10_N
RECOV_ACLK_CLK_P
RECOV_ACLK_CLK_N
CLK_FROM_FPGA_P
CLK_FROM_FPGA_N
CLK_FDBACK_P
CLK_FDBACK_N
0.1UF C276
0.1UF C277
R1540 100
1k R23
1k R24
1k R25
1k R26
SCL_PLL
SDA_PLL
RST*
VDDO0
OUT0
VDDO1
OUT1
VDDO2
OUT2
VDDO3
OUT3
VDDO4
OUT4
VDDO5
OUT5
VDDO6
OUT6
VDDO7
OUT7
VDDO8
OUT8
VDDO9
OUT9
INTR
LOL
CLK_TO_FPGA_P
CLK_TO_FPGA_N
0.1UF C34
0.1UF C35
0.1UF C36
0.1UF C37
INTR*
LOL*
R31 100
CLK_TO_SFP[0..11]
CLK_TO_SFP.CLK_TO_SFP_P0
CLK_TO_SFP.CLK_TO_SFP_N0
CLK_TO_SFP.CLK_TO_SFP_P1
CLK_TO_SFP.CLK_TO_SFP_N1
CLK_TO_SFP.CLK_TO_SFP_P2
CLK_TO_SFP.CLK_TO_SFP_N2
CLK_TO_SFP.CLK_TO_SFP_P3
CLK_TO_SFP.CLK_TO_SFP_N3
CLK_TO_SFP.CLK_TO_SFP_P4
CLK_TO_SFP.CLK_TO_SFP_N4
CLK_TO_SFP.CLK_TO_SFP_P5
CLK_TO_SFP.CLK_TO_SFP_N5
NetGroup
TP6
TP7
J100 U.FL-R-SMT_10_
J101 U.FL-R-SMT_10_
SIG
GND_1
GND_2
Set IO_VDD_SEL
bit to VDDA!
I2C Address = 0x68
GPS_Group[0..1]
GPS_GROUP[0..1]
GPS_GROUP.GPS_CLK_P
GPS_GROUP.GPS_CLK_N
0.1UF C38
0.1UF C39
25V
R35 100
GPS_CLK10_P
GPS_CLK10_N
LOL LEDs
VCC3V3
LOL*
Q1 BSS138K
D1 RED
R32 75 Ohm
D2 GREEN
R33 1k
R34 75 Ohm
FMC[0..116]
VDD_PG
FMC.PG_1V8
FMC[0..116]
RST*
LOL*
INTR*
FMC.CLK_GEN_RST*
FMC.CLK_GEN_LOL*
FMC.CLK_GEN_INTR*
FMC.CLK_FROM_FPGA_P
FMC.CLK_FROM_FPGA_N
FMC.CLK_TO_FPGA_P
FMC.CLK_TO_FPGA_N
FMC.RECOV_ACLK_CLK_P
FMC.RECOV_ACLK_CLK_N
FMC.SCL_FPGA
FMC.SDA_FPGA
0.1UF C2735
0.1UF C2736
0.1UF C2737
0.1UF C2738
R2692 100
R2693 100
R3694 0 Ohm
R3695 0 Ohm
SCL_FPGA
SDA_FPGA
J102
TSW-103-07-G-S
UNIVERSITY OF PENNSYLVANIA
HIGH ENERGY PHYSICS
209 S 33rd Street
Philadelphia PA 19104
Design Title: GPS Interface Board
Schematic Title: 02. Clock Generation
Page Title: 04. Clock Generation
Size B
Date: Wednesday, July 09, 2025
Document Number: <Doc>
Rev <RevCode>
Designer: Jon Sensenig
Sheet: 4 of 23

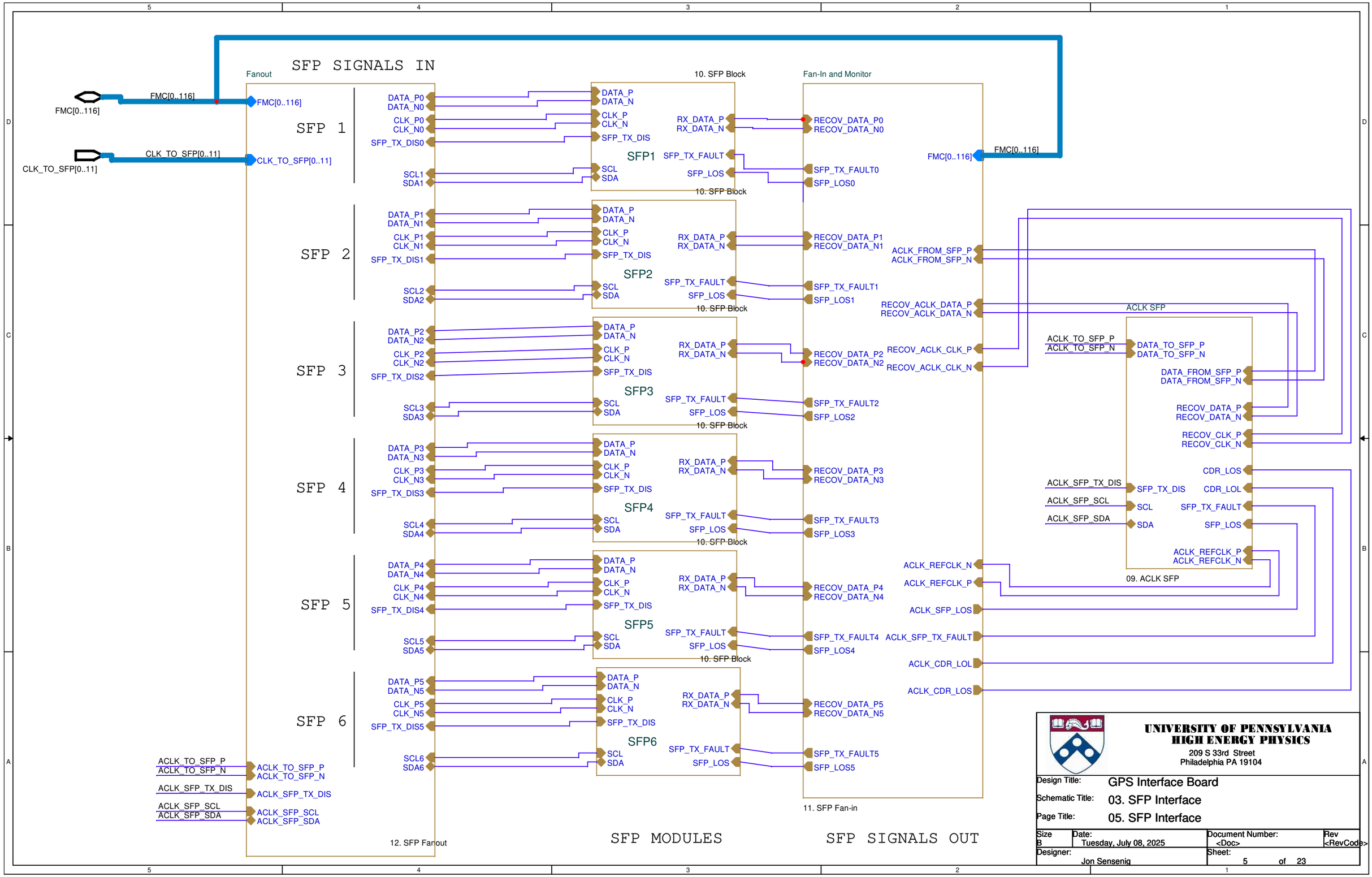

UNIVERSITY OF PENNSYLVANIA
HIGH ENERGY PHYSICS
209 S 33rd Street
Philadelphia PA 19104

Design Title:	GPS Interface Board
Schematic Title:	03. SFP Interface
Page Title:	05. SFP Interface

Size	Date:	Document Number:	Rev
B	Tuesday, July 08, 2025	<Doc>	<RevCode>
Designer: Jon Sensenig		Sheet: 5 of 23	

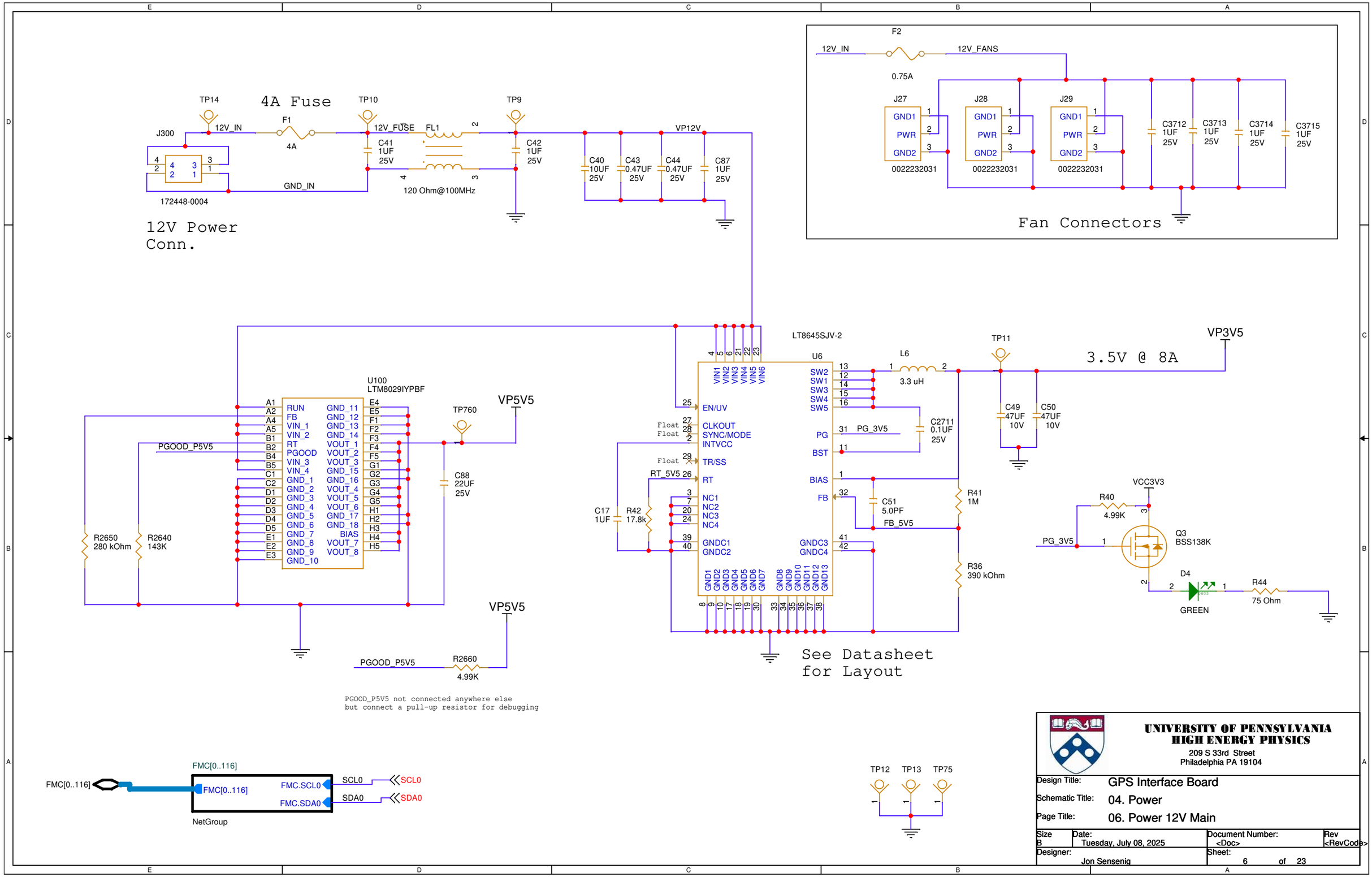

UNIVERSITY OF PENNSYLVANIA
HIGH ENERGY PHYSICS
209 S 33rd Street
Philadelphia PA 19104

Design Title:	GPS Interface Board
Schematic Title:	04. Power
Page Title:	06. Power 12V Main

Size	Date:	Document Number:	Rev
B	Tuesday, July 08, 2025	<Doc>	<RevCode>
Designer: Jon Sensenig		Sheet: 6 of 23	

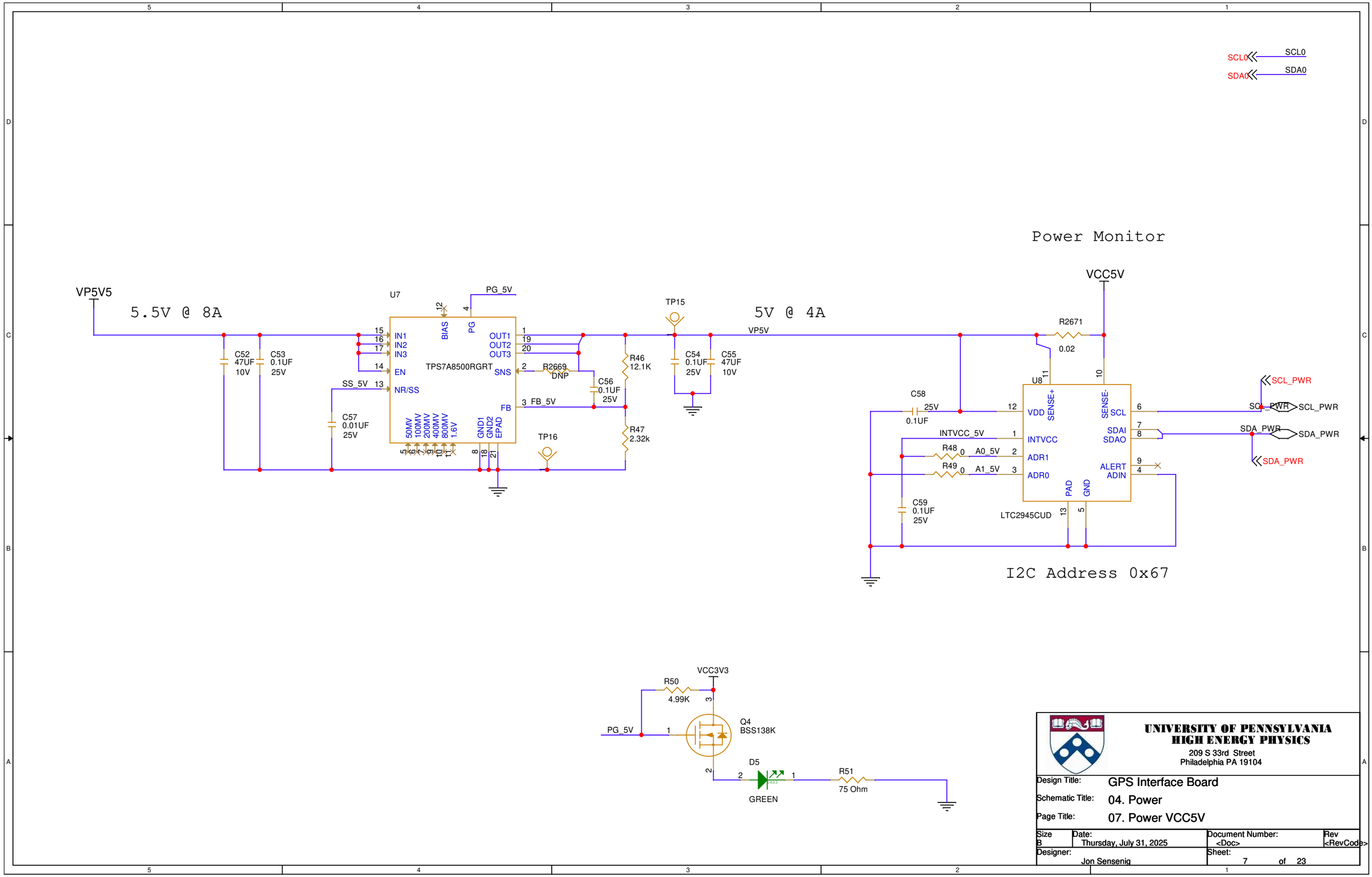

UNIVERSITY OF PENNSYLVANIA
HIGH ENERGY PHYSICS
209 S 33rd Street
Philadelphia PA 19104

Design Title:	GPS Interface Board
Schematic Title:	04. Power
Page Title:	07. Power VCC5V

Size	Date:	Document Number:	Rev
B	Thursday, July 31, 2025	<Doc>	<RevCode>
Designer: Jon Sensenig		Sheet: 7 of 23	

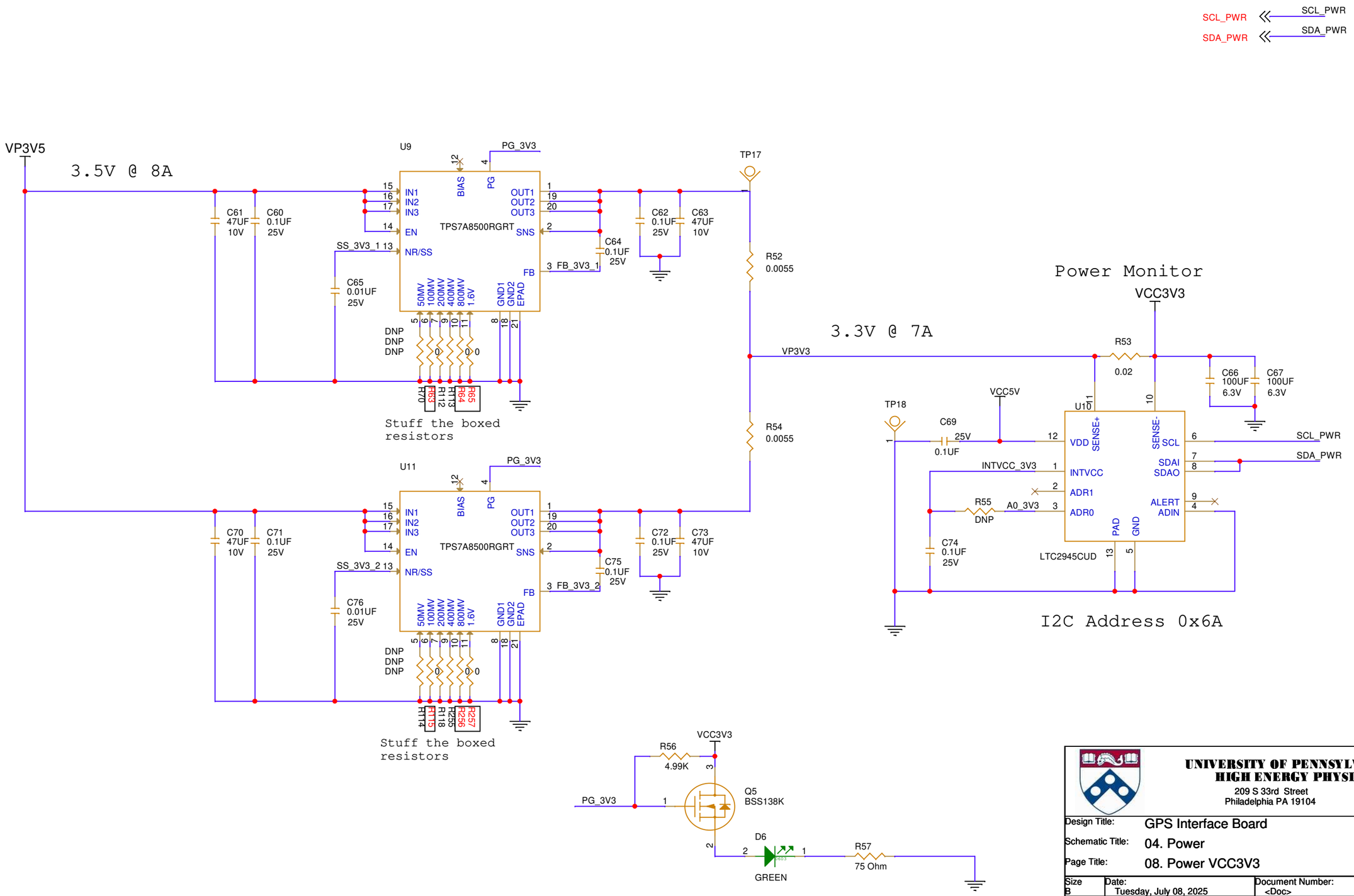

UNIVERSITY OF PENNSYLVANIA
HIGH ENERGY PHYSICS
209 S 33rd Street
Philadelphia PA 19104

Design Title:	GPS Interface Board
Schematic Title:	04. Power
Page Title:	08. Power VCC3V3

Size	Date:	Document Number:	Rev
B	Tuesday, July 08, 2025	<Doc>	<RevCode>
Designer: Jon Sensenig		Sheet: 8 of 23	

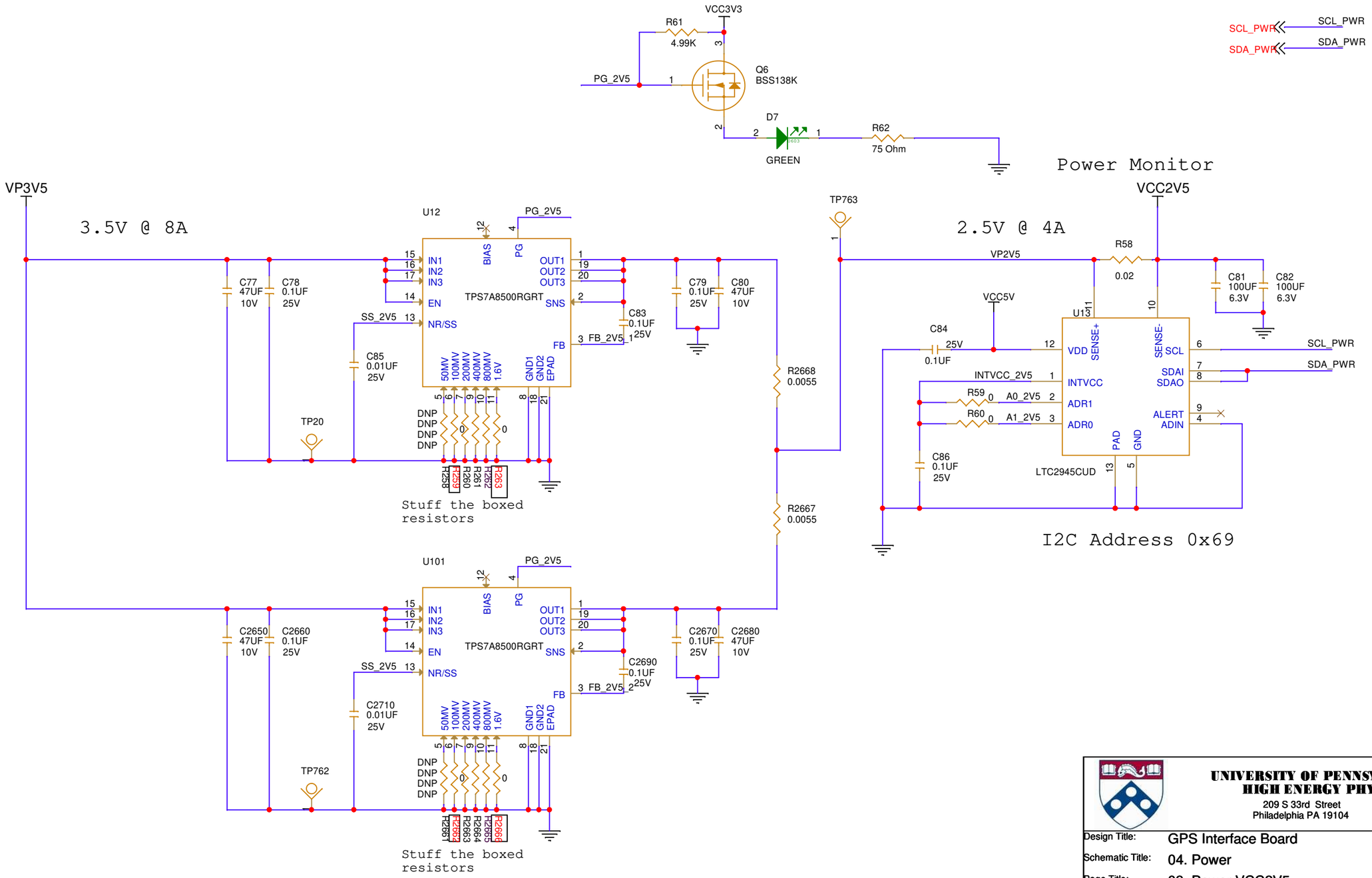

UNIVERSITY OF PENNSYLVANIA
HIGH ENERGY PHYSICS
209 S 33rd Street
Philadelphia PA 19104

Design Title:	GPS Interface Board
Schematic Title:	04. Power
Page Title:	09. Power VCC2V5

Size	Date:	Document Number:	Rev
B	Tuesday, July 08, 2025	<Doc>	<RevCode>
Designer: Jon Sensenig		Sheet: 9 of 23	

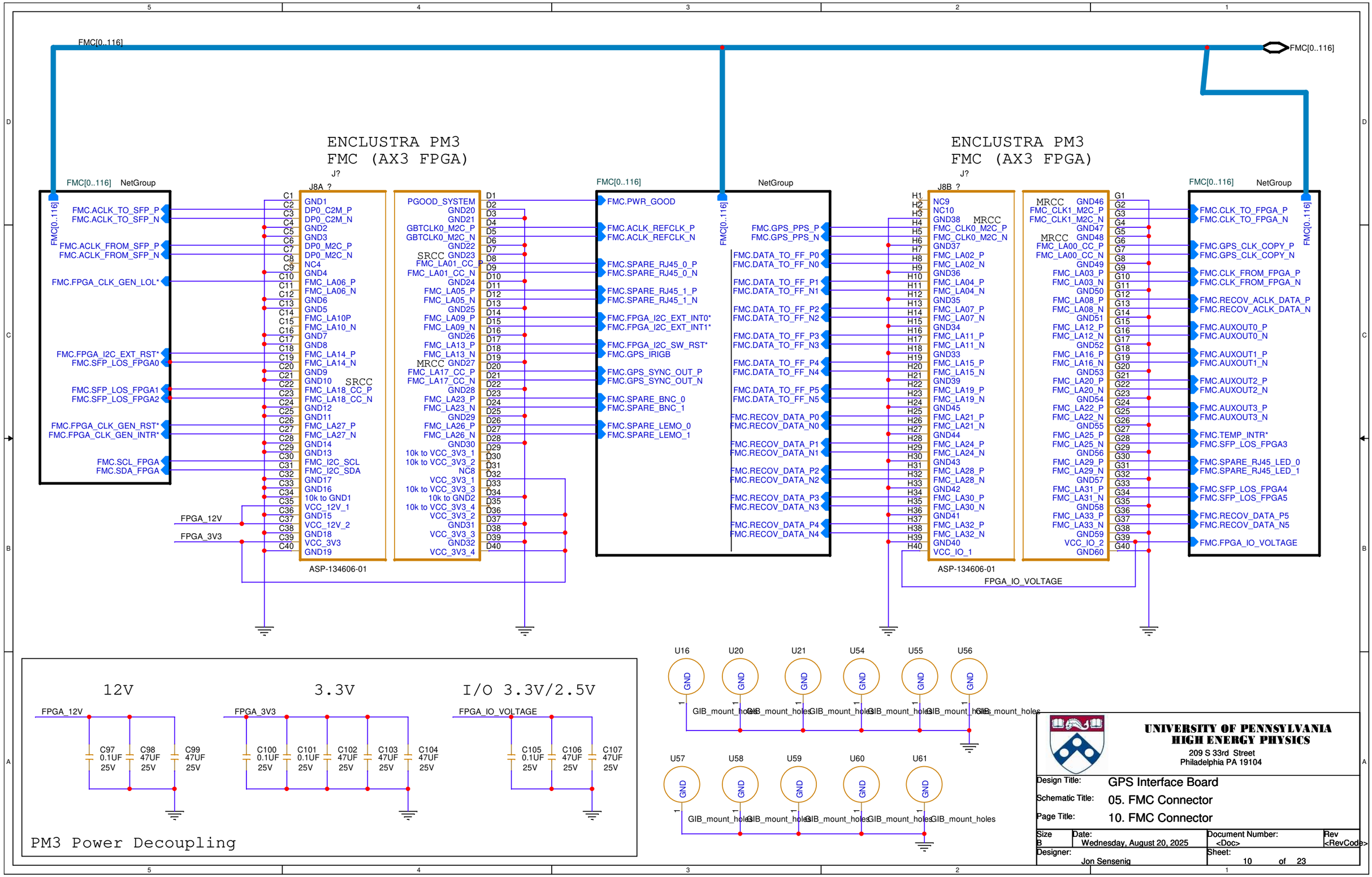
FMC[0..116]
ENCLUSTRA PM3
FMC (AX3 FPGA)
J?
J8A ?
NetGroup
FMC.ACLK_TO_SFP_P
FMC.ACLK_TO_SFP_N
FMC.ACLK_FROM_SFP_P
FMC.ACLK_FROM_SFP_N
FMC.FPGA_CLK_GEN_LOL*
FMC.FPGA_I2C_EXT_RST*
FMC.SFP_LOS_FPGA0
FMC.SFP_LOS_FPGA1
FMC.SFP_LOS_FPGA2
FMC.FPGA_CLK_GEN_RST*
FMC.FPGA_CLK_GEN_INTR*
FMC.SCL_FPGA
FMC.SDA_FPGA
FPGA_12V
FPGA_3V3
ASP-134606-01
FMC.PWR_GOOD
FMC.ACLK_REFCLK_P
FMC.ACLK_REFCLK_N
FMC.SPARE_RJ45_0_P
FMC.SPARE_RJ45_0_N
FMC.SPARE_RJ45_1_P
FMC.SPARE_RJ45_1_N
FMC.FPGA_I2C_EXT_INT0*
FMC.FPGA_I2C_EXT_INT1*
FMC.FPGA_I2C_SW_RST*
FMC.GPS_IRIGB
FMC.GPS_SYNC_OUT_P
FMC.GPS_SYNC_OUT_N
FMC.SPARE_BNC_0
FMC.SPARE_BNC_1
FMC.SPARE_LEMO_0
FMC.SPARE_LEMO_1
FMC.GPS_PPS_P
FMC.GPS_PPS_N
FMC.DATA_TO_FF_P0
FMC.DATA_TO_FF_N0
FMC.DATA_TO_FF_P1
FMC.DATA_TO_FF_N1
FMC.DATA_TO_FF_P2
FMC.DATA_TO_FF_N2
FMC.DATA_TO_FF_P3
FMC.DATA_TO_FF_N3
FMC.DATA_TO_FF_P4
FMC.DATA_TO_FF_N4
FMC.DATA_TO_FF_P5
FMC.DATA_TO_FF_N5
FMC.RECOV_DATA_P0
FMC.RECOV_DATA_N0
FMC.RECOV_DATA_P1
FMC.RECOV_DATA_N1
FMC.RECOV_DATA_P2
FMC.RECOV_DATA_N2
FMC.RECOV_DATA_P3
FMC.RECOV_DATA_N3
FMC.RECOV_DATA_P4
FMC.RECOV_DATA_N4
J8B ?
FPGA_IO_VOLTAGE
FMC.CLK_TO_FPGA_P
FMC.CLK_TO_FPGA_N
FMC.GPS_CLK_COPY_P
FMC.GPS_CLK_COPY_N
FMC.CLK_FROM_FPGA_P
FMC.CLK_FROM_FPGA_N
FMC.RECOV_ACLK_DATA_P
FMC.RECOV_ACLK_DATA_N
FMC.AUXOUT0_P
FMC.AUXOUT0_N
FMC.AUXOUT1_P
FMC.AUXOUT1_N
FMC.AUXOUT2_P
FMC.AUXOUT2_N
FMC.AUXOUT3_P
FMC.AUXOUT3_N
FMC.TEMP_INTR*
FMC.SFP_LOS_FPGA3
FMC.SPARE_RJ45_LED_0
FMC.SPARE_RJ45_LED_1
FMC.SFP_LOS_FPGA4
FMC.SFP_LOS_FPGA5
FMC.RECOV_DATA_P5
FMC.RECOV_DATA_N5
FMC.FPGA_IO_VOLTAGE
12V
3.3V
I/O 3.3V/2.5V
C97 0.1UF 25V
C98 47UF 25V
C99 47UF 25V
C100 0.1UF 25V
C101 0.1UF 25V
C102 47UF 25V
C103 47UF 25V
C104 47UF 25V
C105 0.1UF 25V
C106 47UF 25V
C107 47UF 25V
PM3 Power Decoupling
U16
U20
U21
U54
U55
U56
U57
U58
U59
U60
U61
GND
GIB_mount_holes
UNIVERSITY OF PENNSYLVANIA
HIGH ENERGY PHYSICS
209 S 33rd Street
Philadelphia PA 19104
Design Title: GPS Interface Board
Schematic Title: 05. FMC Connector
Page Title: 10. FMC Connector
Size B
Date: Wednesday, August 20, 2025
Document Number: <Doc>
Rev <RevCode>
Designer: Jon Sensenig
Sheet: 10 of 23

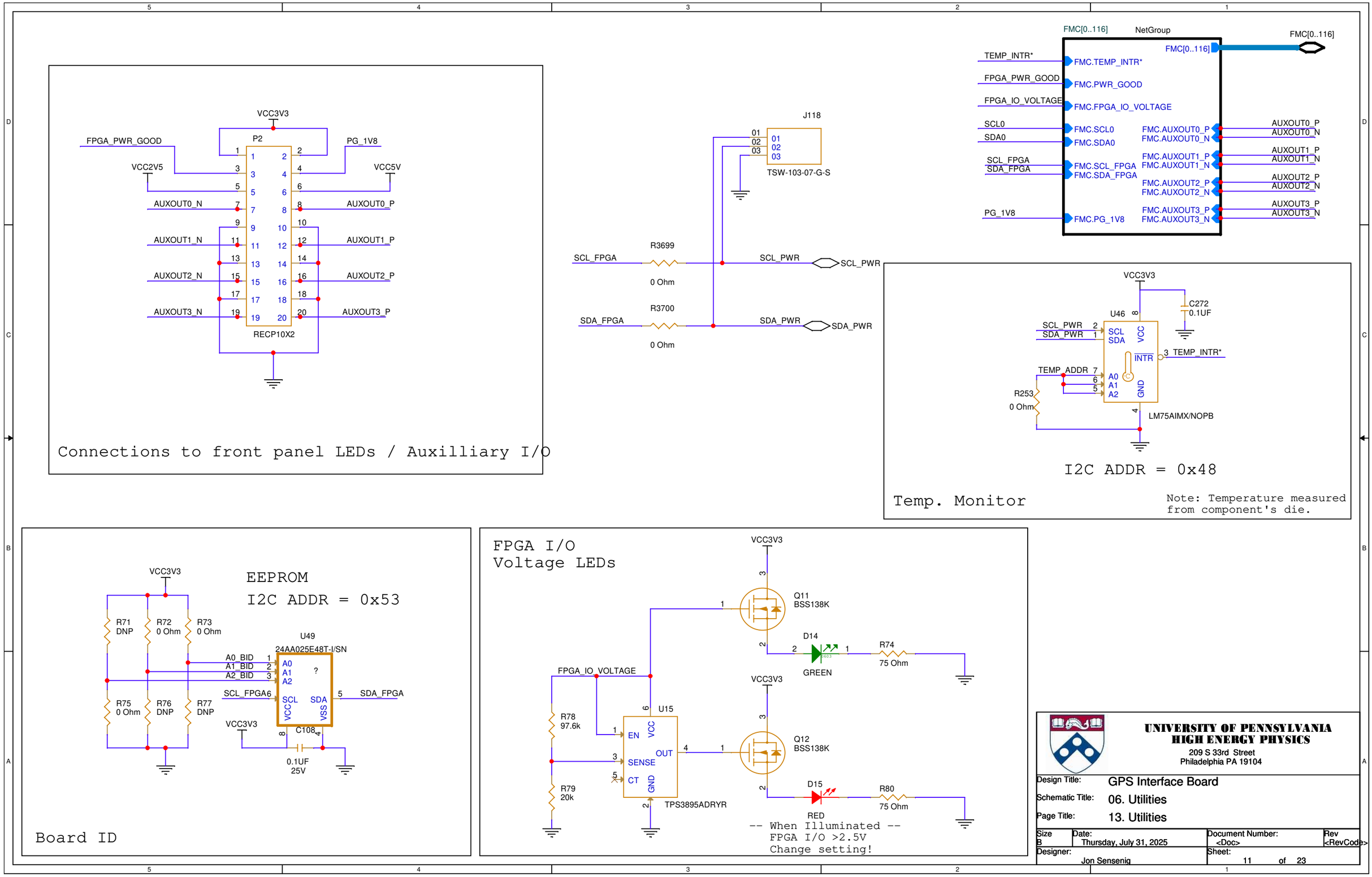
Connections to front panel LEDs / Auxilliary I/O
VCC3V3
P2
FPGA_PWR_GOOD
PG_1V8
VCC2V5
VCC5V
AUXOUT0_N
AUXOUT0_P
AUXOUT1_N
AUXOUT1_P
AUXOUT2_N
AUXOUT2_P
AUXOUT3_N
AUXOUT3_P
RECP10X2
J118
TSW-103-07-G-S
SCL_FPGA
R3699
0 Ohm
SCL_PWR
SDA_FPGA
R3700
0 Ohm
SDA_PWR
FMC[0..116]
NetGroup
TEMP_INTR*
FPGA_PWR_GOOD
FPGA_IO_VOLTAGE
SCL0
SDA0
SCL_FPGA
SDA_FPGA
PG_1V8
FMC.TEMP_INTR*
FMC.PWR_GOOD
FMC.FPGA_IO_VOLTAGE
FMC.SCL0
FMC.SDA0
FMC.SCL_FPGA
FMC.SDA_FPGA
FMC.PG_1V8
FMC.AUXOUT0_P
FMC.AUXOUT0_N
FMC.AUXOUT1_P
FMC.AUXOUT1_N
FMC.AUXOUT2_P
FMC.AUXOUT2_N
FMC.AUXOUT3_P
FMC.AUXOUT3_N
Temp. Monitor
U46
C272
0.1UF
SCL_PWR
SDA_PWR
SCL
SDA
VCC
INTR
TEMP_INTR*
TEMP_ADDR
A0
A1
A2
GND
R253
0 Ohm
LM75AIMX/NOPB
I2C ADDR = 0x48
Note: Temperature measured from component's die.
EEPROM
I2C ADDR = 0x53
R71
DNP
R72
0 Ohm
R73
0 Ohm
R75
0 Ohm
R76
DNP
R77
DNP
U49
24AA025E48T-I/SN
A0_BID
A1_BID
A2_BID
SCL_FPGA6
SDA_FPGA
VCC3V3
C108
0.1UF
25V
Board ID
FPGA I/O
Voltage LEDs
Q11
BSS138K
D14
GREEN
R74
75 Ohm
FPGA_IO_VOLTAGE
R78
97.6k
R79
20k
U15
EN
SENSE
CT
OUT
TPS3895ADRYR
Q12
BSS138K
D15
RED
R80
75 Ohm
-- When Illuminated --
FPGA I/O >2.5V
Change setting!
UNIVERSITY OF PENNSYLVANIA
HIGH ENERGY PHYSICS
209 S 33rd Street
Philadelphia PA 19104
Design Title: GPS Interface Board
Schematic Title: 06. Utilities
Page Title: 13. Utilities
Size B
Date: Thursday, July 31, 2025
Document Number: <Doc>
Rev <RevCode>
Designer: Jon Sensenig
Sheet: 11 of 23

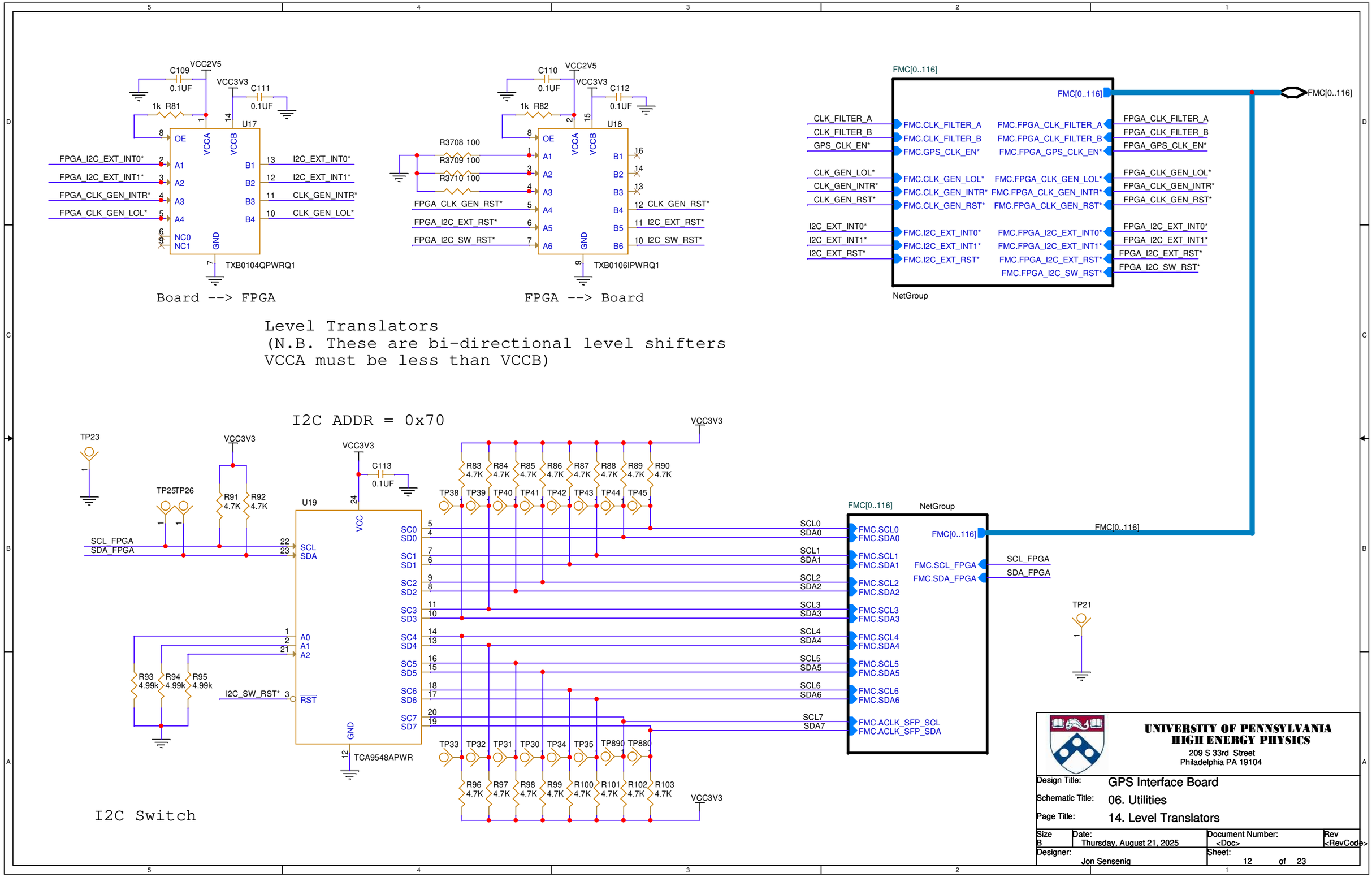
VCC2V5
C109
0.1UF
VCC3V3
C111
0.1UF
1k R81
U17
OE
VCCA
VCCB
A1
A2
A3
A4
NC0
NC1
GND
B1
B2
B3
B4
FPGA_I2C_EXT_INT0*
FPGA_I2C_EXT_INT1*
FPGA_CLK_GEN_INTR*
FPGA_CLK_GEN_LOL*
I2C_EXT_INT0*
I2C_EXT_INT1*
CLK_GEN_INTR*
CLK_GEN_LOL*
TXB0104QPWRQ1
Board --> FPGA
C110
0.1UF
VCC2V5
VCC3V3
C112
0.1UF
1k R82
U18
R3708 100
R3709 100
R3710 100
FPGA_CLK_GEN_RST*
FPGA_I2C_EXT_RST*
FPGA_I2C_SW_RST*
CLK_GEN_RST*
I2C_EXT_RST*
I2C_SW_RST*
TXB0106IPWRQ1
FPGA --> Board
Level Translators
(N.B. These are bi-directional level shifters
VCCA must be less than VCCB)
FMC[0..116]
NetGroup
CLK_FILTER_A
CLK_FILTER_B
GPS_CLK_EN*
CLK_GEN_LOL*
CLK_GEN_INTR*
CLK_GEN_RST*
I2C_EXT_INT0*
I2C_EXT_INT1*
I2C_EXT_RST*
FMC.CLK_FILTER_A
FMC.CLK_FILTER_B
FMC.GPS_CLK_EN*
FMC.CLK_GEN_LOL*
FMC.CLK_GEN_INTR*
FMC.CLK_GEN_RST*
FMC.I2C_EXT_INT0*
FMC.I2C_EXT_INT1*
FMC.I2C_EXT_RST*
FMC.FPGA_CLK_FILTER_A
FMC.FPGA_CLK_FILTER_B
FMC.FPGA_GPS_CLK_EN*
FMC.FPGA_CLK_GEN_LOL*
FMC.FPGA_CLK_GEN_INTR*
FMC.FPGA_CLK_GEN_RST*
FMC.FPGA_I2C_EXT_INT0*
FMC.FPGA_I2C_EXT_INT1*
FMC.FPGA_I2C_EXT_RST*
FMC.FPGA_I2C_SW_RST*
FPGA_CLK_FILTER_A
FPGA_CLK_FILTER_B
FPGA_GPS_CLK_EN*
FPGA_CLK_GEN_LOL*
FPGA_CLK_GEN_INTR*
FPGA_CLK_GEN_RST*
FPGA_I2C_EXT_INT0*
FPGA_I2C_EXT_INT1*
FPGA_I2C_EXT_RST*
FPGA_I2C_SW_RST*
I2C ADDR = 0x70
TP23
VCC3V3
TP25TP26
R91 4.7K
R92 4.7K
SCL_FPGA
SDA_FPGA
U19
VCC
SCL
SDA
A0
A1
A2
RST
GND
TCA9548APWR
R93 4.99k
R94 4.99k
R95 4.99k
I2C_SW_RST*
C113
0.1UF
R83 4.7K
R84 4.7K
R85 4.7K
R86 4.7K
R87 4.7K
R88 4.7K
R89 4.7K
R90 4.7K
TP38
TP39
TP40
TP41
TP42
TP43
TP44
TP45
SC0
SD0
SC1
SD1
SC2
SD2
SC3
SD3
SC4
SD4
SC5
SD5
SC6
SD6
SC7
SD7
TP33
TP32
TP31
TP30
TP34
TP35
TP890
TP880
R96 4.7K
R97 4.7K
R98 4.7K
R99 4.7K
R100 4.7K
R101 4.7K
R102 4.7K
R103 4.7K
SCL0
SDA0
SCL1
SDA1
SCL2
SDA2
SCL3
SDA3
SCL4
SDA4
SCL5
SDA5
SCL6
SDA6
SCL7
SDA7
FMC.SCL0
FMC.SDA0
FMC.SCL1
FMC.SDA1
FMC.SCL2
FMC.SDA2
FMC.SCL3
FMC.SDA3
FMC.SCL4
FMC.SDA4
FMC.SCL5
FMC.SDA5
FMC.SCL6
FMC.SDA6
FMC.ACLK_SFP_SCL
FMC.ACLK_SFP_SDA
FMC.SCL_FPGA
FMC.SDA_FPGA
TP21
I2C Switch
UNIVERSITY OF PENNSYLVANIA
HIGH ENERGY PHYSICS
209 S 33rd Street
Philadelphia PA 19104
Design Title: GPS Interface Board
Schematic Title: 06. Utilities
Page Title: 14. Level Translators
Size B
Date: Thursday, August 21, 2025
Document Number: <Doc>
Rev <RevCode>
Designer: Jon Sensenig
Sheet: 12 of 23

SPARE I/O
LEMO

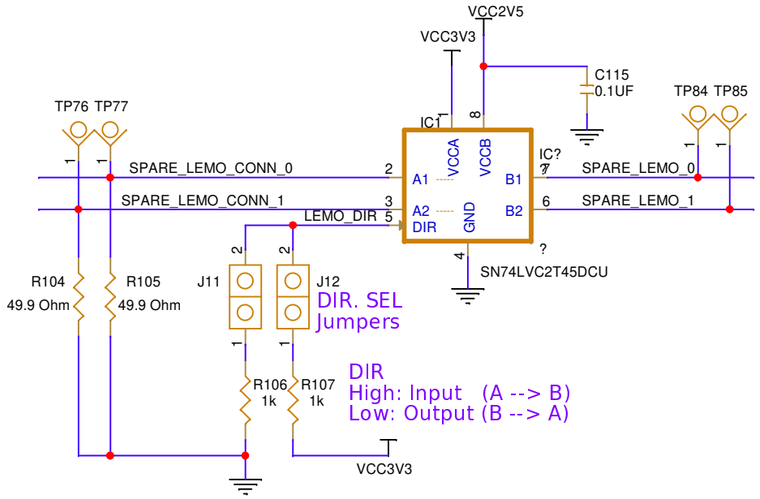

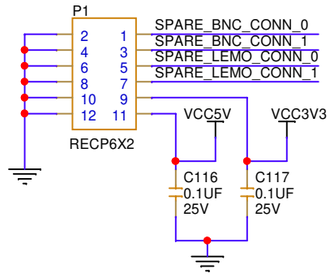

I/O Connector
to BNC & LEMO

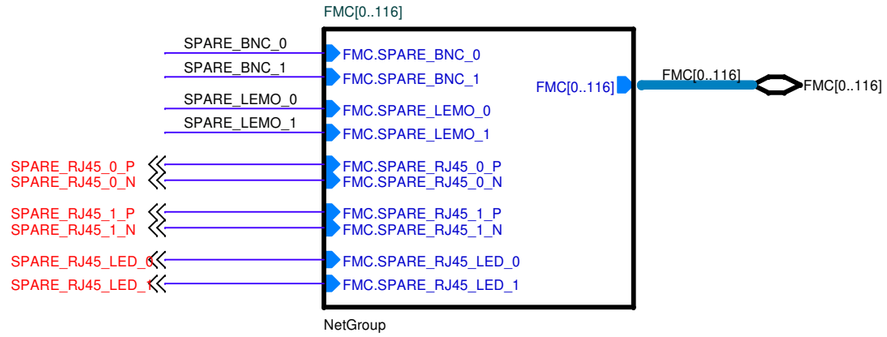

SPARE I/O
BNC

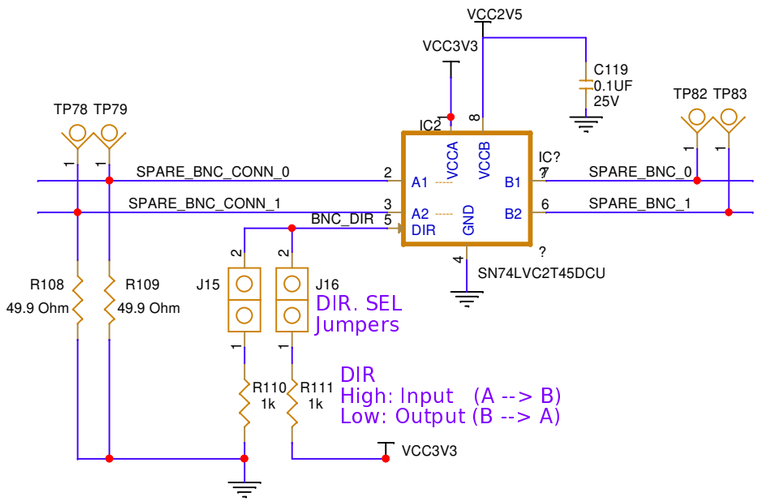

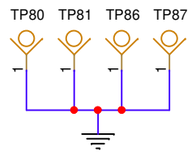

UNIVERSITY OF PENNSYLVANIA
HIGH ENERGY PHYSICS
209 S 33rd Street
Philadelphia PA 19104

Design Title:	GPS Interface Board
Schematic Title:	06. Utilities
Page Title:	15. Spare I/O BNC/LEMO

Size	Date:	Document Number:	Rev
B	Tuesday, July 08, 2025	<Doc>	<RevCode>
Designer: Jon Sensenig		Sheet: 13 of 23	

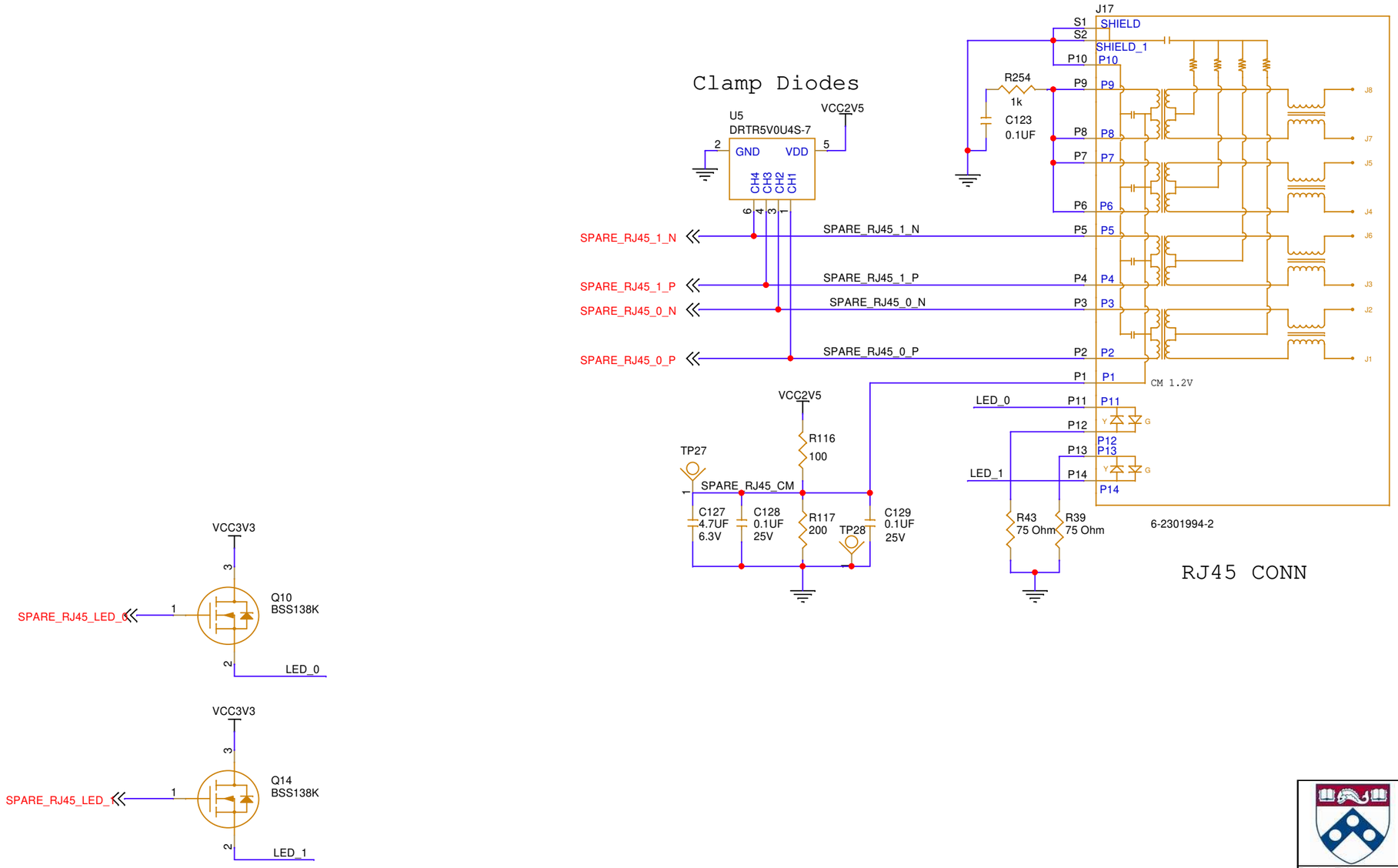

UNIVERSITY OF PENNSYLVANIA
HIGH ENERGY PHYSICS
209 S 33rd Street
Philadelphia PA 19104

Design Title:	GPS Interface Board
Schematic Title:	06. Utilities
Page Title:	16. Spare I/O RJ45

Size	Date:	Document Number:	Rev
B	Tuesday, July 08, 2025	<Doc>	<RevCode>
Designer: Jon Sensenig		Sheet: 14 of 23	

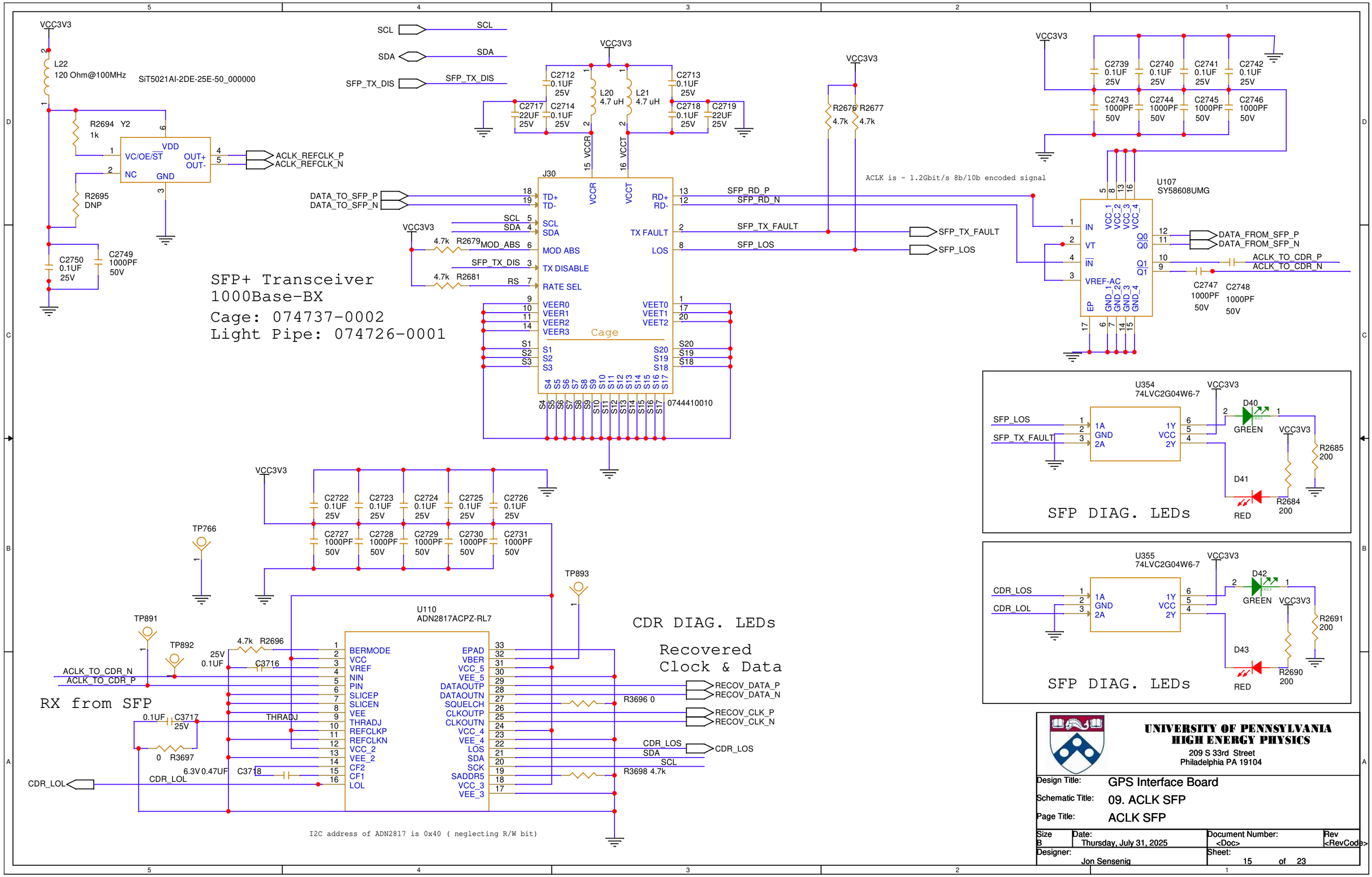

UNIVERSITY OF PENNSYLVANIA
HIGH ENERGY PHYSICS
209 S 33rd Street
Philadelphia PA 19104

Design Title:	GPS Interface Board
Schematic Title:	09. ACLK SFP
Page Title:	ACLK SFP

Size	Date:	Document Number:	Rev
B	Thursday, July 31, 2025	<Doc>	<RevCode>
Designer: Jon Sensenig		Sheet: 15 of 23	

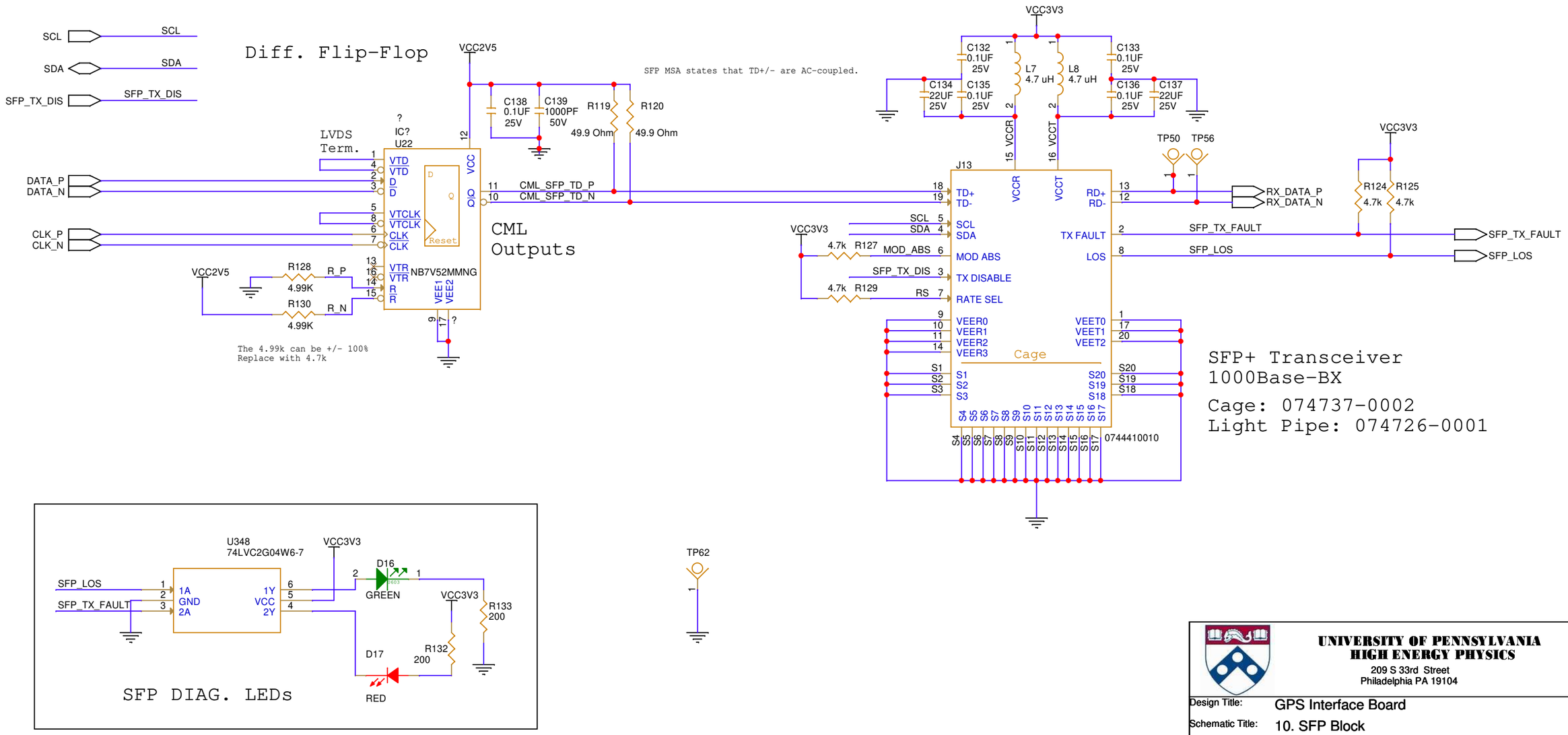

UNIVERSITY OF PENNSYLVANIA
HIGH ENERGY PHYSICS
209 S 33rd Street
Philadelphia PA 19104

Design Title:	GPS Interface Board
Schematic Title:	10. SFP Block
Page Title:	SFP

Size	Date:	Document Number:	Rev
B	Thursday, July 31, 2025	<Doc>	<RevCode>
Designer: Jon Sensenig		Sheet: 16 of 23	

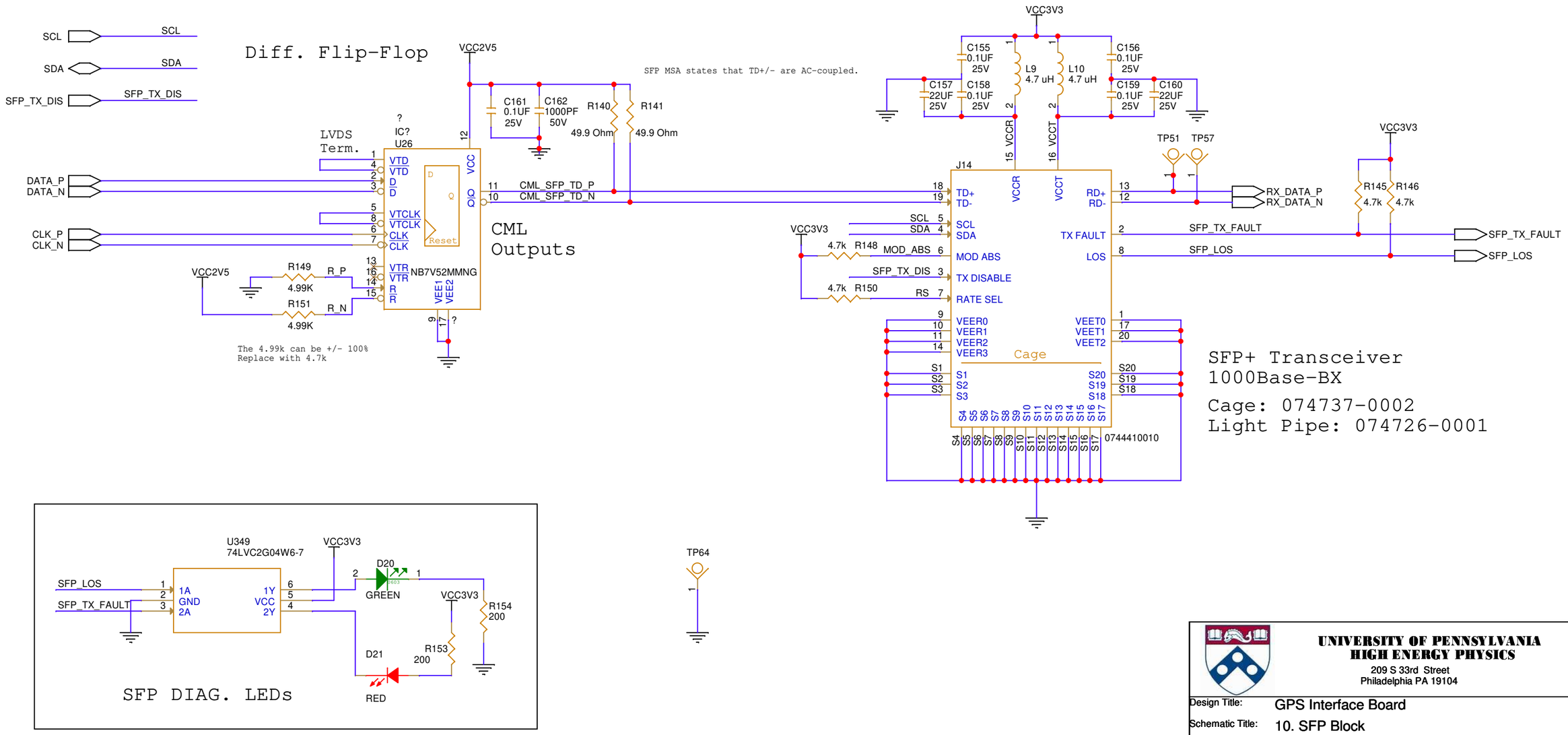

UNIVERSITY OF PENNSYLVANIA
HIGH ENERGY PHYSICS
209 S 33rd Street
Philadelphia PA 19104

Design Title:	GPS Interface Board
Schematic Title:	10. SFP Block
Page Title:	SFP

Size	Date:	Document Number:	Rev
B	Thursday, July 31, 2025	<Doc>	<RevCode>
Designer: Jon Sensenig		Sheet: 17 of 23	

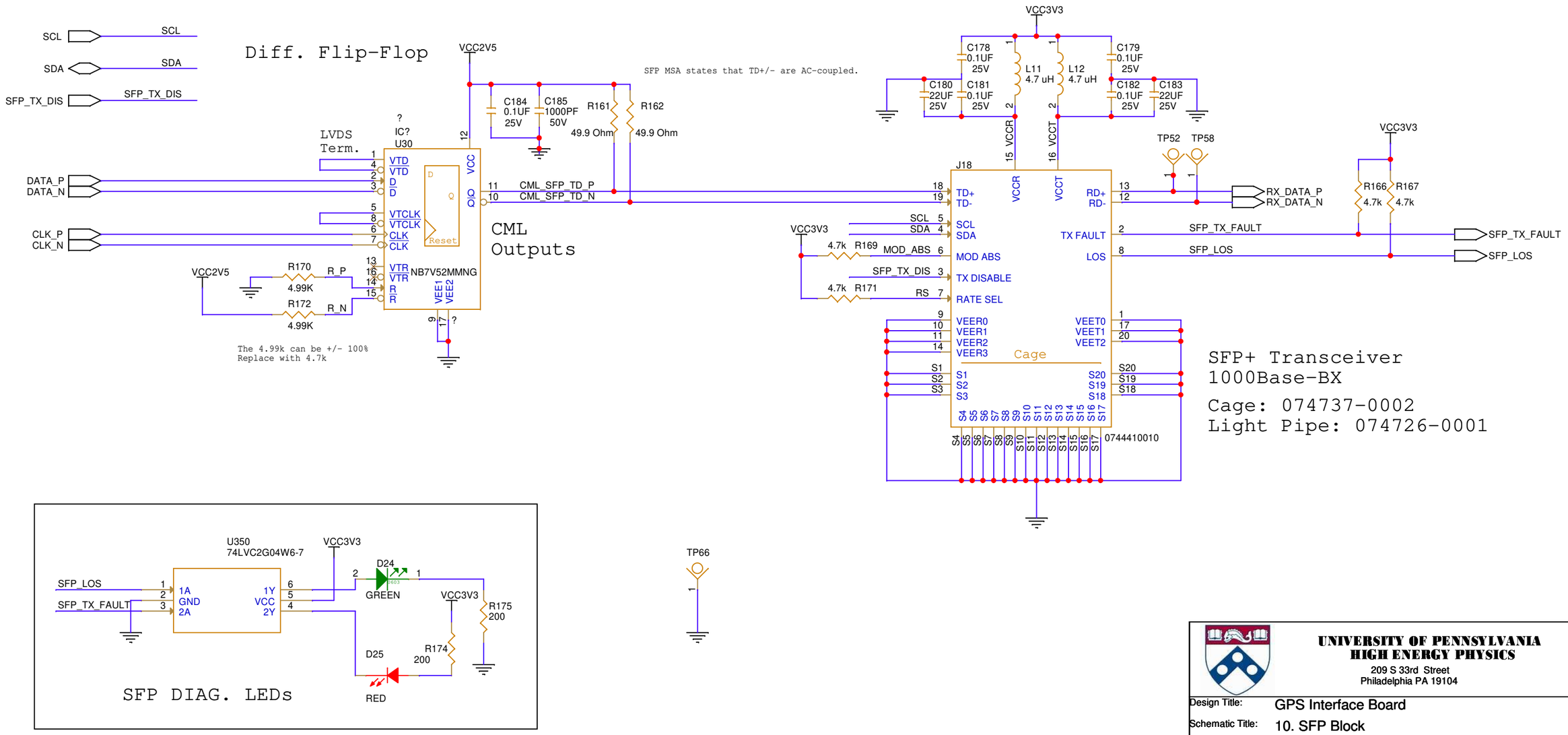

UNIVERSITY OF PENNSYLVANIA
HIGH ENERGY PHYSICS
209 S 33rd Street
Philadelphia PA 19104

Design Title:	GPS Interface Board
Schematic Title:	10. SFP Block
Page Title:	SFP

Size	Date:	Document Number:	Rev
B	Thursday, July 31, 2025	<Doc>	<RevCode>
Designer: Jon Sensenig		Sheet: 18 of 23	

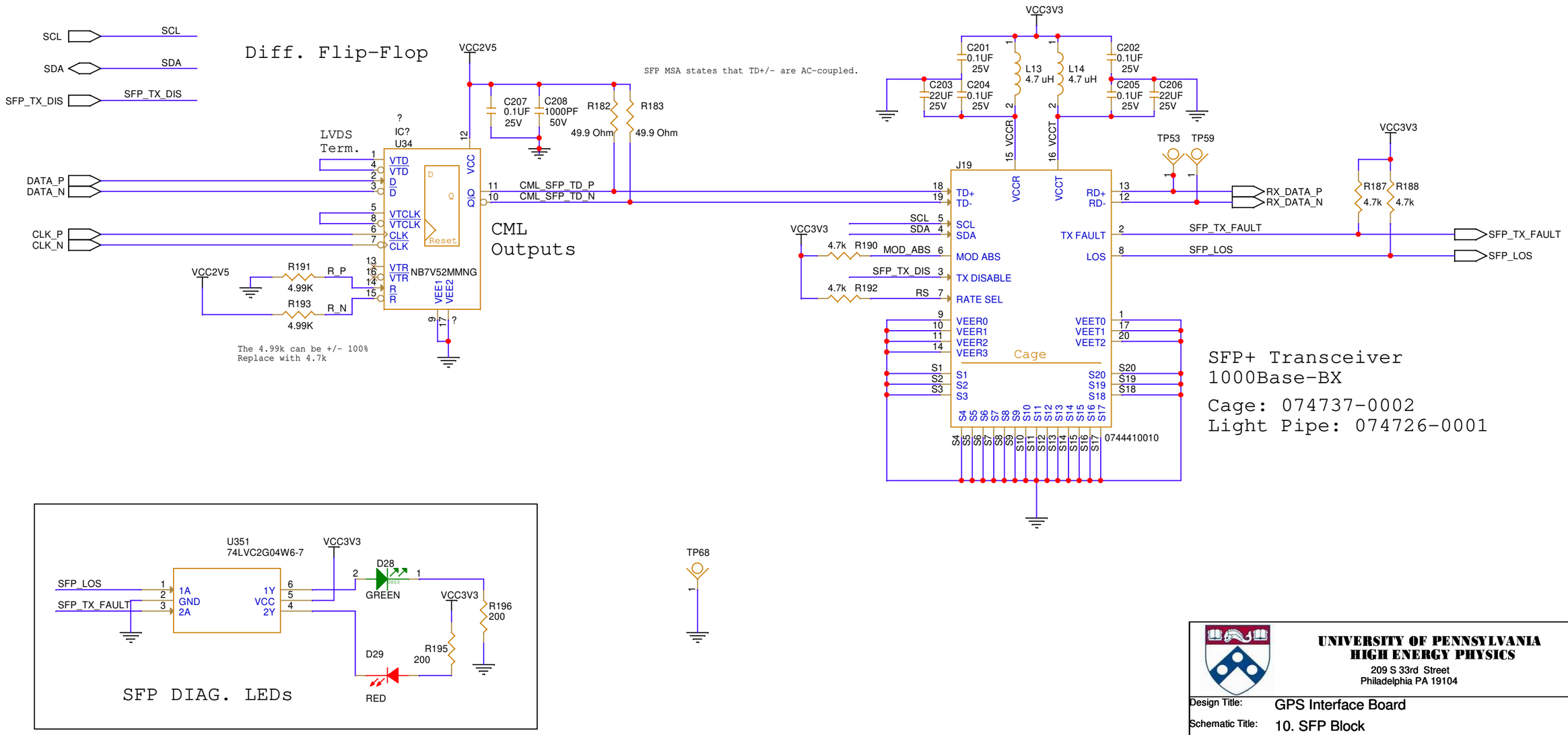

UNIVERSITY OF PENNSYLVANIA
HIGH ENERGY PHYSICS
209 S 33rd Street
Philadelphia PA 19104

Design Title:	GPS Interface Board
Schematic Title:	10. SFP Block
Page Title:	SFP

Size	Date:	Document Number:	Rev
B	Thursday, July 31, 2025	<Doc>	<RevCode>
Designer: Jon Sensenig		Sheet: 19 of 23	

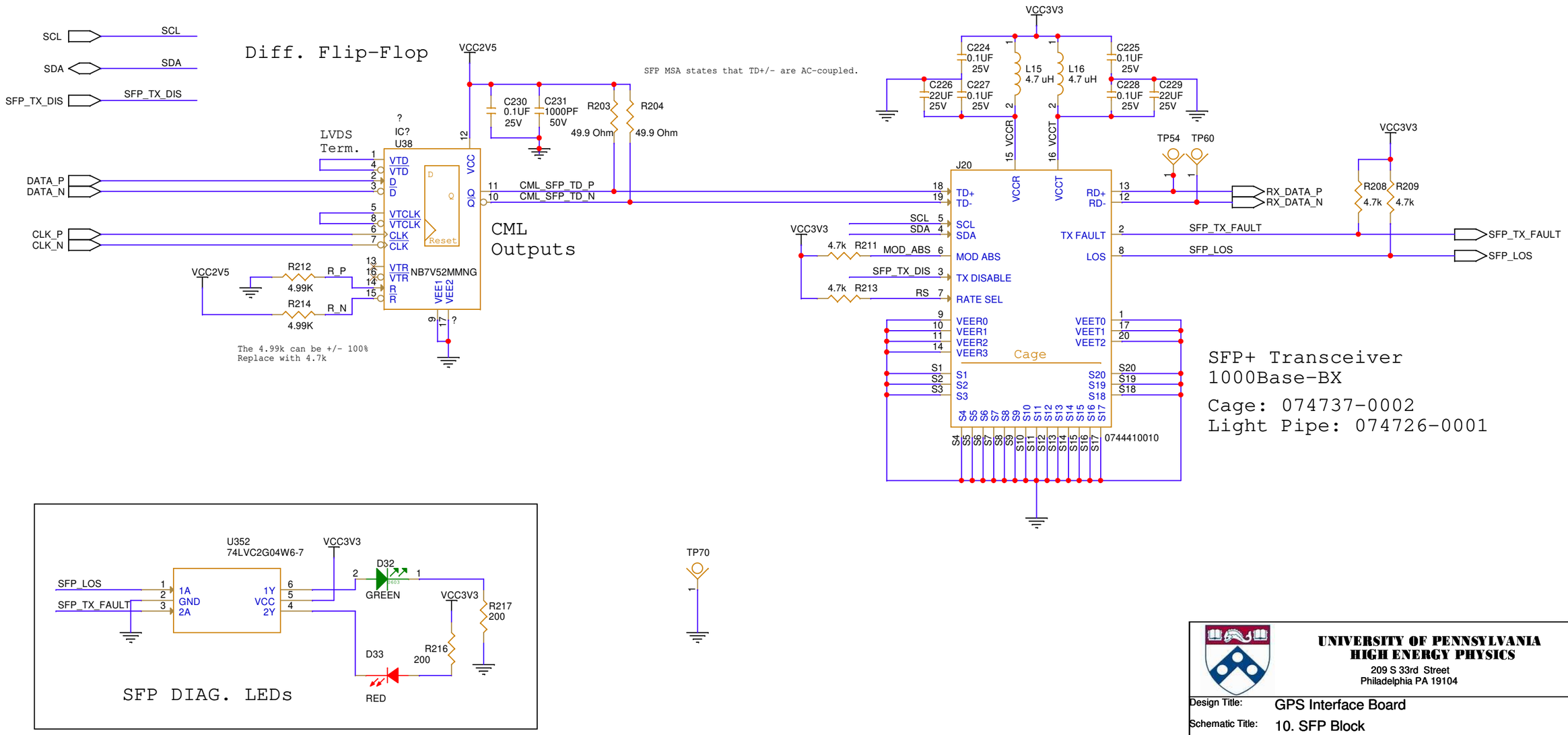

UNIVERSITY OF PENNSYLVANIA
HIGH ENERGY PHYSICS
209 S 33rd Street
Philadelphia PA 19104

Design Title:	GPS Interface Board
Schematic Title:	10. SFP Block
Page Title:	SFP

Size	Date:	Document Number:	Rev
B	Thursday, July 31, 2025	<Doc>	<RevCode>
Designer: Jon Sensenig		Sheet: 20 of 23	

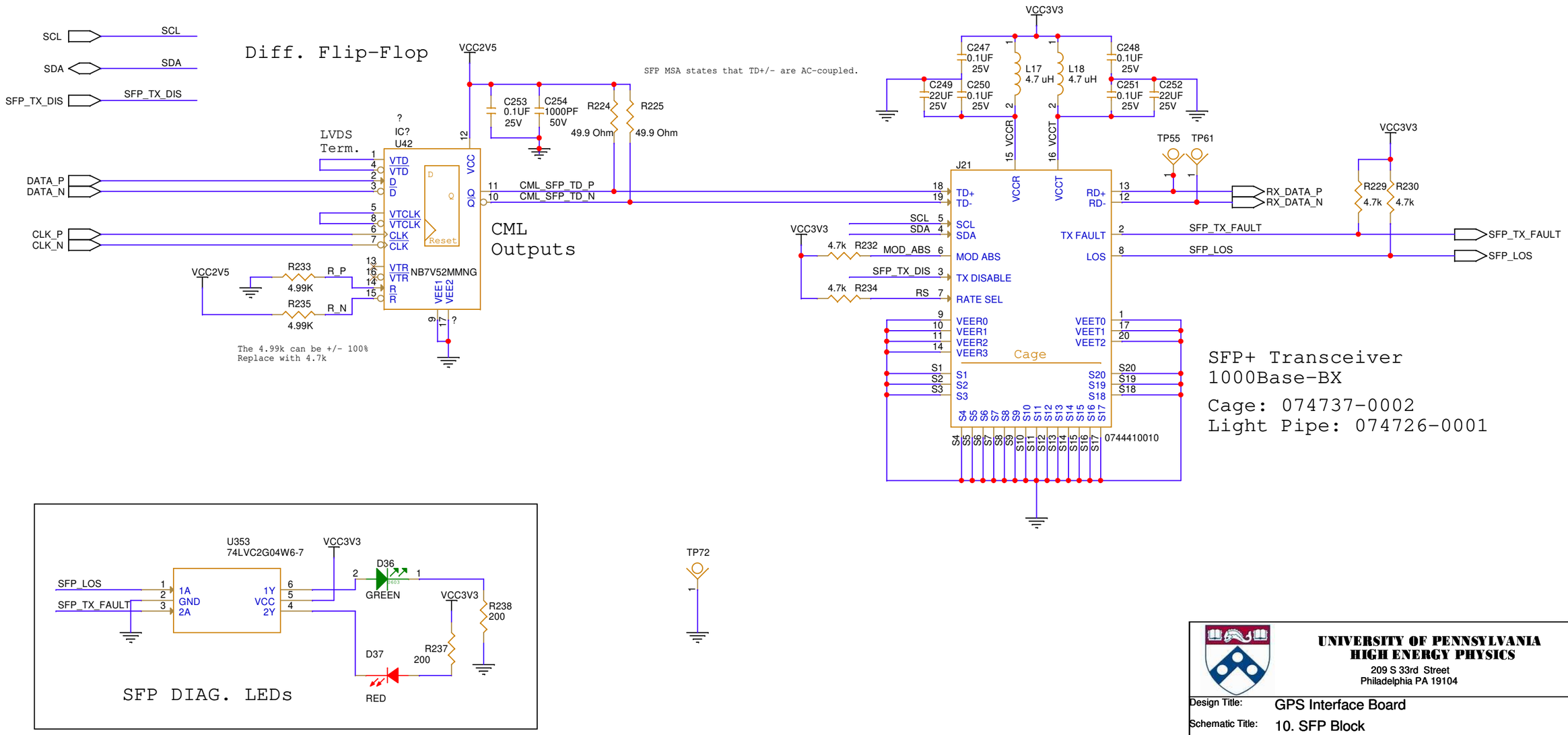

UNIVERSITY OF PENNSYLVANIA
HIGH ENERGY PHYSICS
209 S 33rd Street
Philadelphia PA 19104

Design Title:	GPS Interface Board
Schematic Title:	10. SFP Block
Page Title:	SFP

Size	Date:	Document Number:	Rev
B	Thursday, July 31, 2025	<Doc>	<RevCode>
Designer: Jon Sensenig		Sheet: 21 of 23	

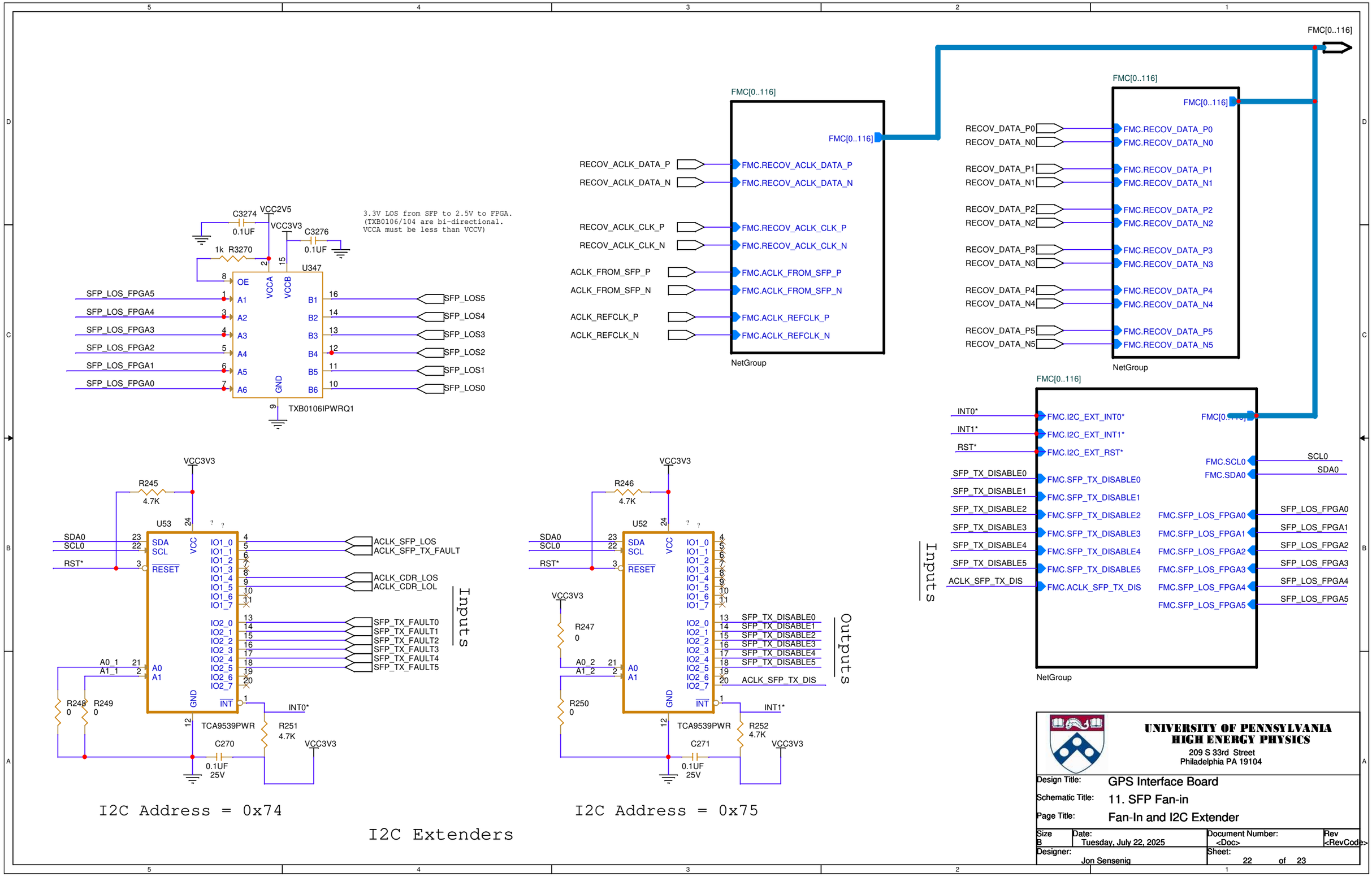

UNIVERSITY OF PENNSYLVANIA
HIGH ENERGY PHYSICS
209 S 33rd Street
Philadelphia PA 19104

Design Title:	GPS Interface Board
Schematic Title:	11. SFP Fan-in
Page Title:	Fan-In and I2C Extender

Size	Date:	Document Number:	Rev
B	Tuesday, July 22, 2025	<Doc>	<RevCode>
Designer: Jon Sensenig		Sheet: 22 of 23	

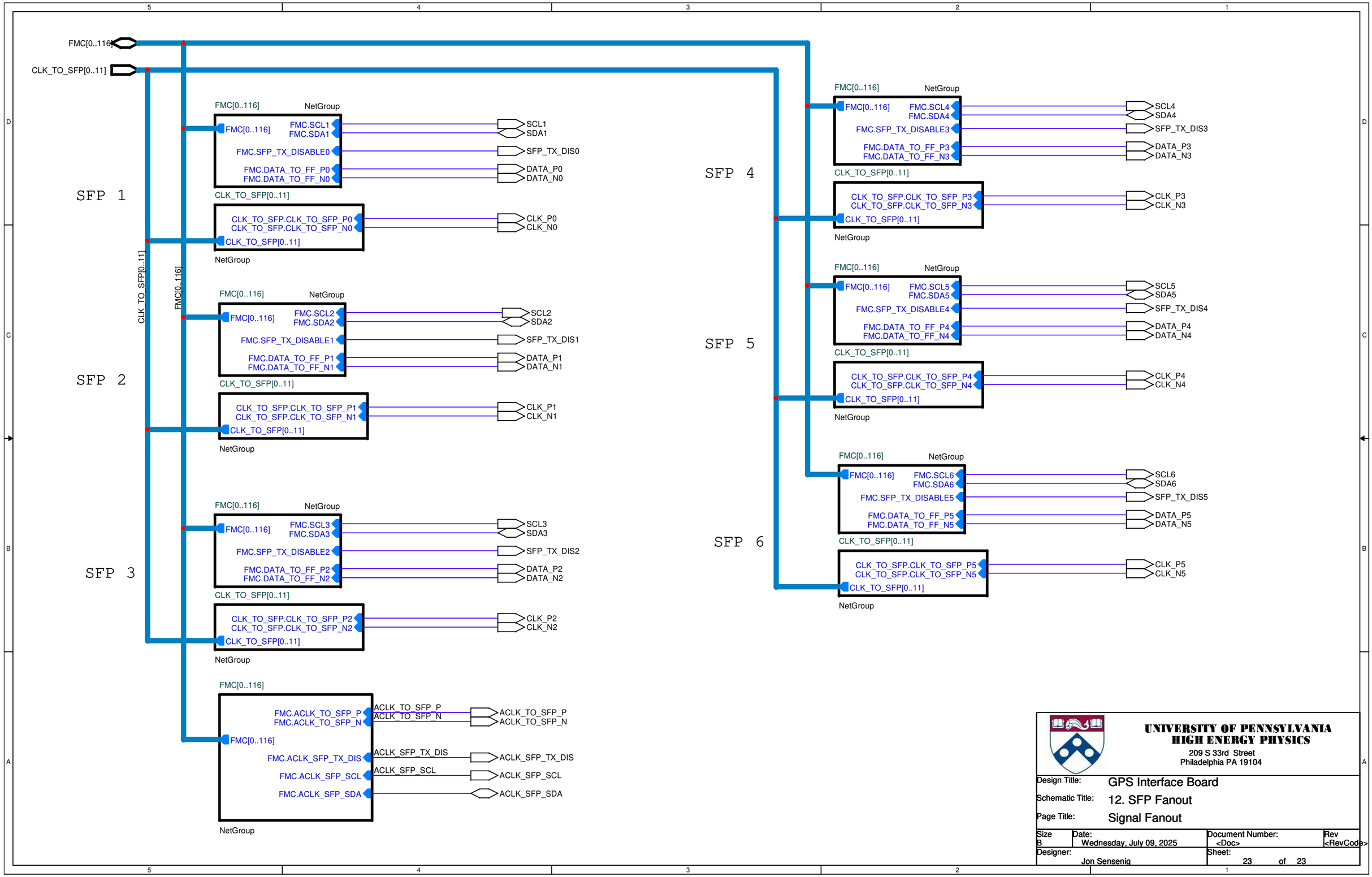

UNIVERSITY OF PENNSYLVANIA
HIGH ENERGY PHYSICS
209 S 33rd Street
Philadelphia PA 19104

Design Title:	GPS Interface Board
Schematic Title:	12. SFP Fanout
Page Title:	Signal Fanout

Size	Date:	Document Number:	Rev
B	Wednesday, July 09, 2025	<Doc>	<RevCode>
Designer: Jon Sensenig		Sheet: 23 of 23	