Hasee Mini-DTX System Block Diagram

VER:0.1

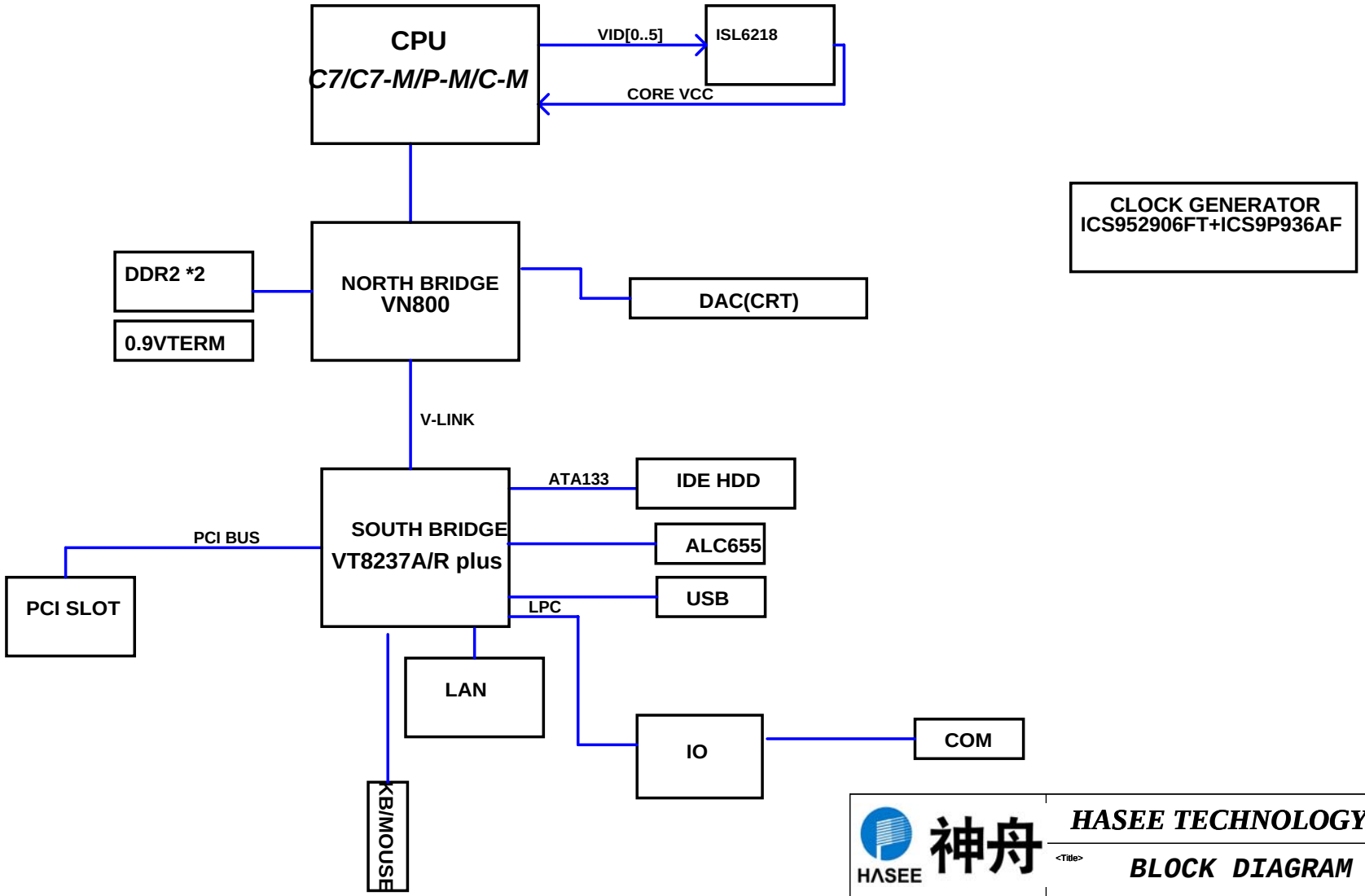

HASEE 神舟

HASEE TECHNOLOGY INC.,

<Title> BLOCK DIAGRAM

Draw by	Size: Custom	CAGE Code: K110	DWG NO: <Doc> Block Diagram	Rev: 0.1
Tuesday, June 26, 2007	Scale	Model: K110	Sheet: 1 of 29	

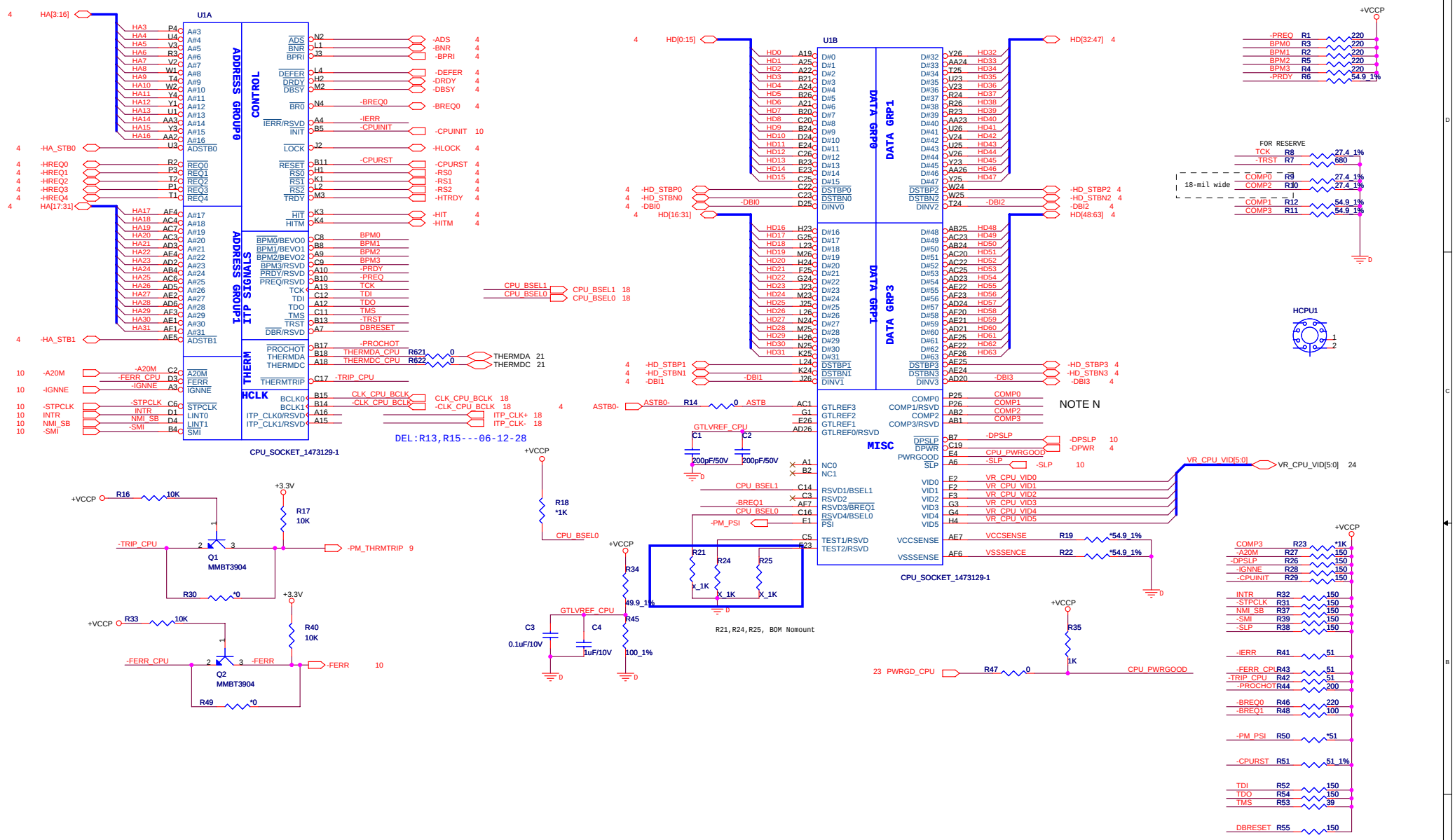

HASEE TECHNOLOGY INC.,

Draw by	Size	CAGE Code	DWG NO	Rev
	Custom	K110	<Doc>	0.1
Friday, September 21, 2007	Scale	Model K110	Sheet 2 of 29	

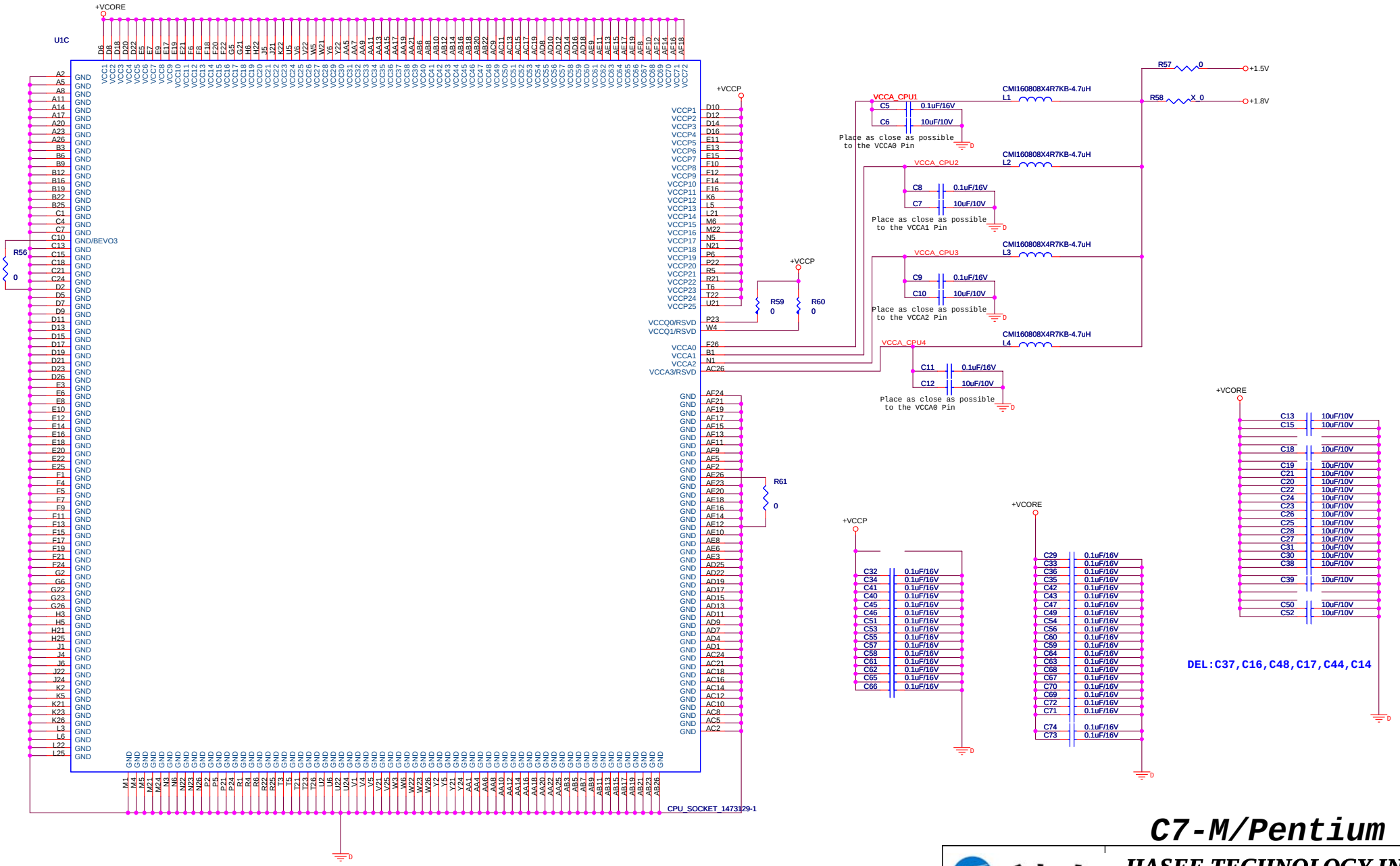

C7-M/Pentium M

HASEE TECHNOLOGY INC.,

<Title> NanoBGA(2of 2)

Draw by	Size: Custom	CAGE Code: K110	DWG NO: <Doc>
			Rev: 0.1
Monday, July 16, 2007	Scale	Model: K110	Sheet: 3 of 29

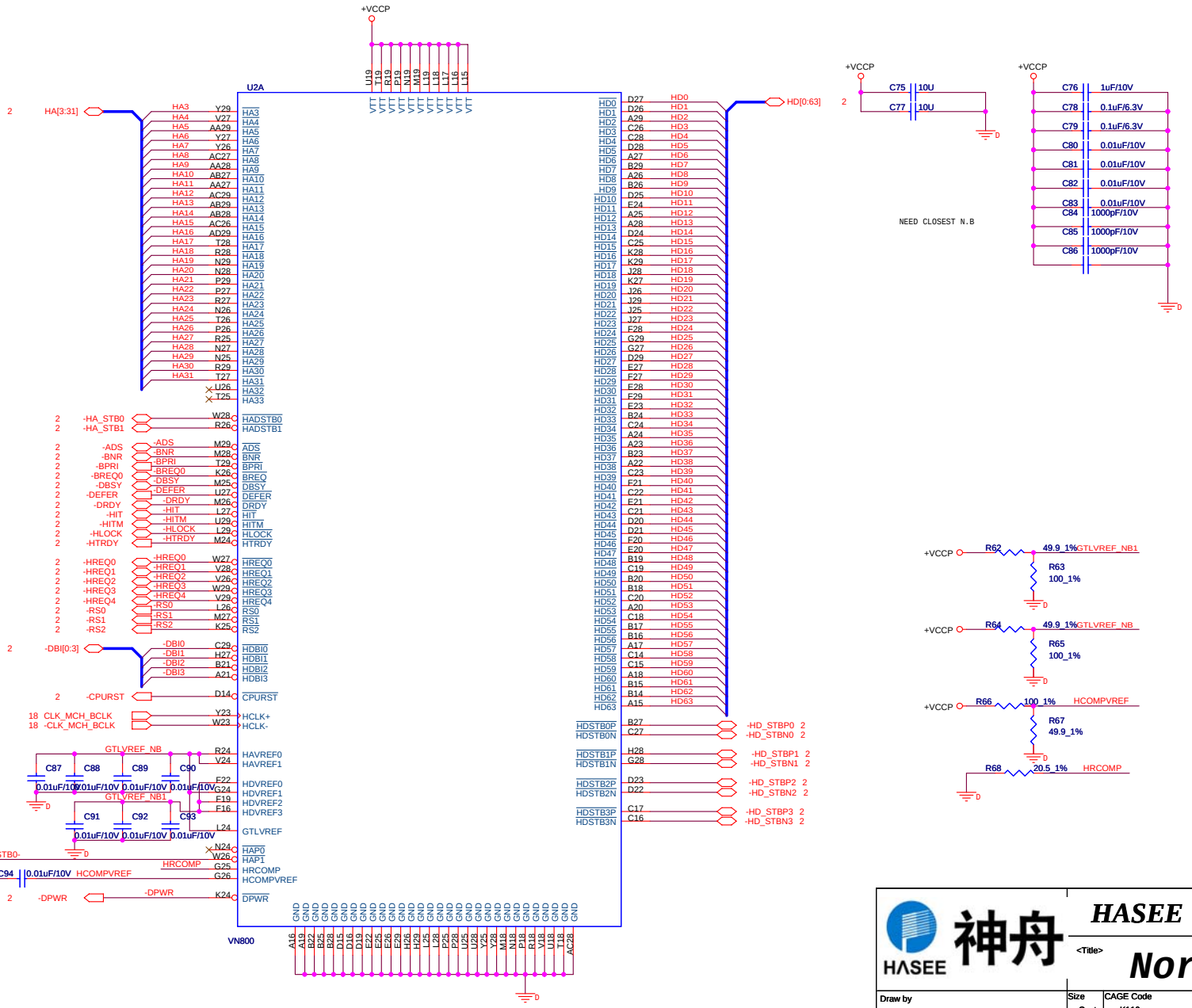

HASEE 神舟

HASEE TECHNOLOGY INC.,

<Title>

North Bridge

Draw by	Size	CAGE Code	DWG NO	Rev
	Custom	K110	<Doc> Host	0.1
Friday, September 21, 2007	Scale	Model K110	Sheet 4 of 29	

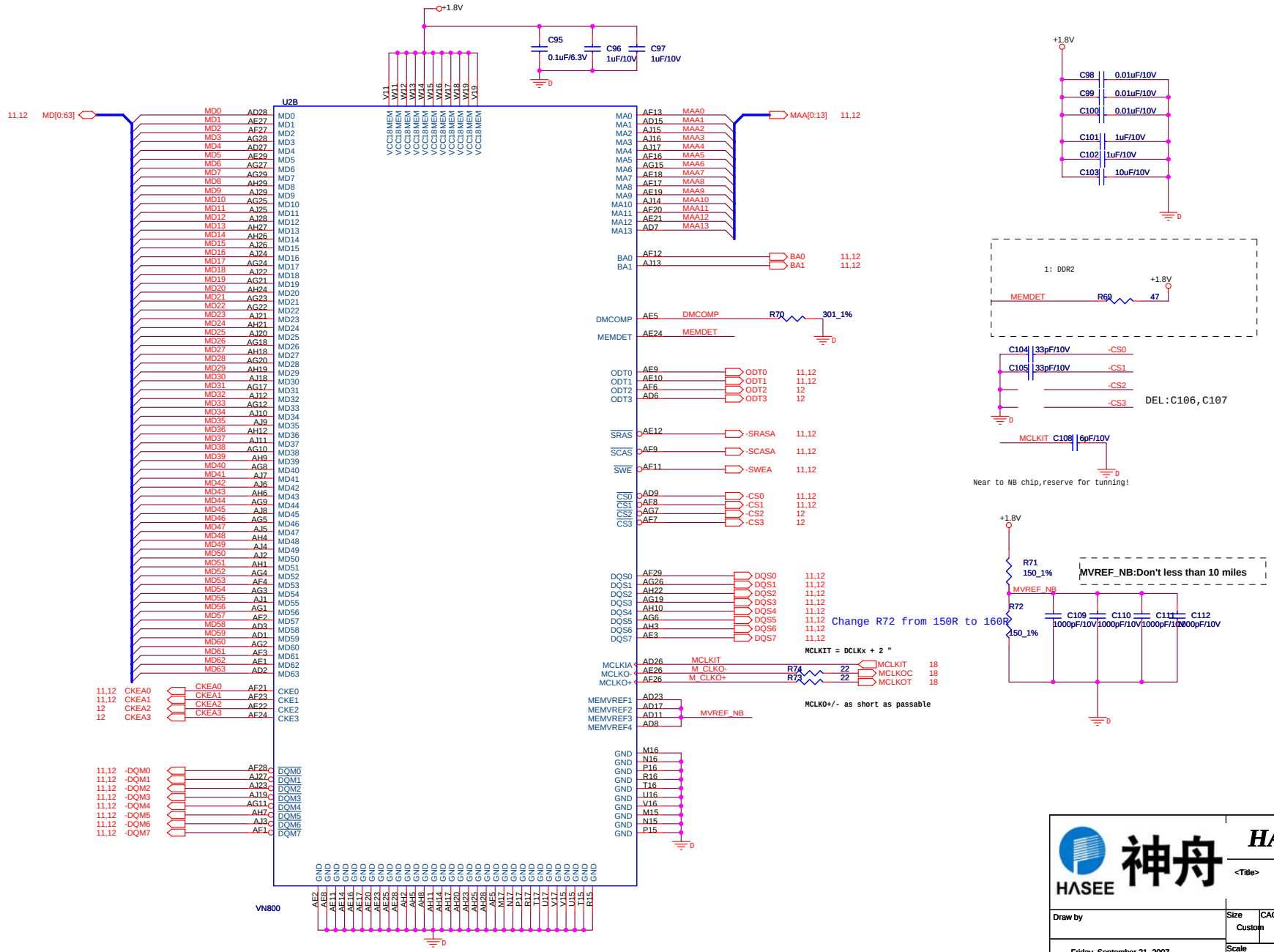

HASEE 神舟

HASEE TECHNOLOGY INC.,

<Title>

North Bridge

Draw by	Size	CAGE Code	DWG NO	Rev
	Custom	K110	<Doc> DDR A Side	0.1
Friday, September 21, 2007	Scale	Model K110	Sheet 5 of 29	

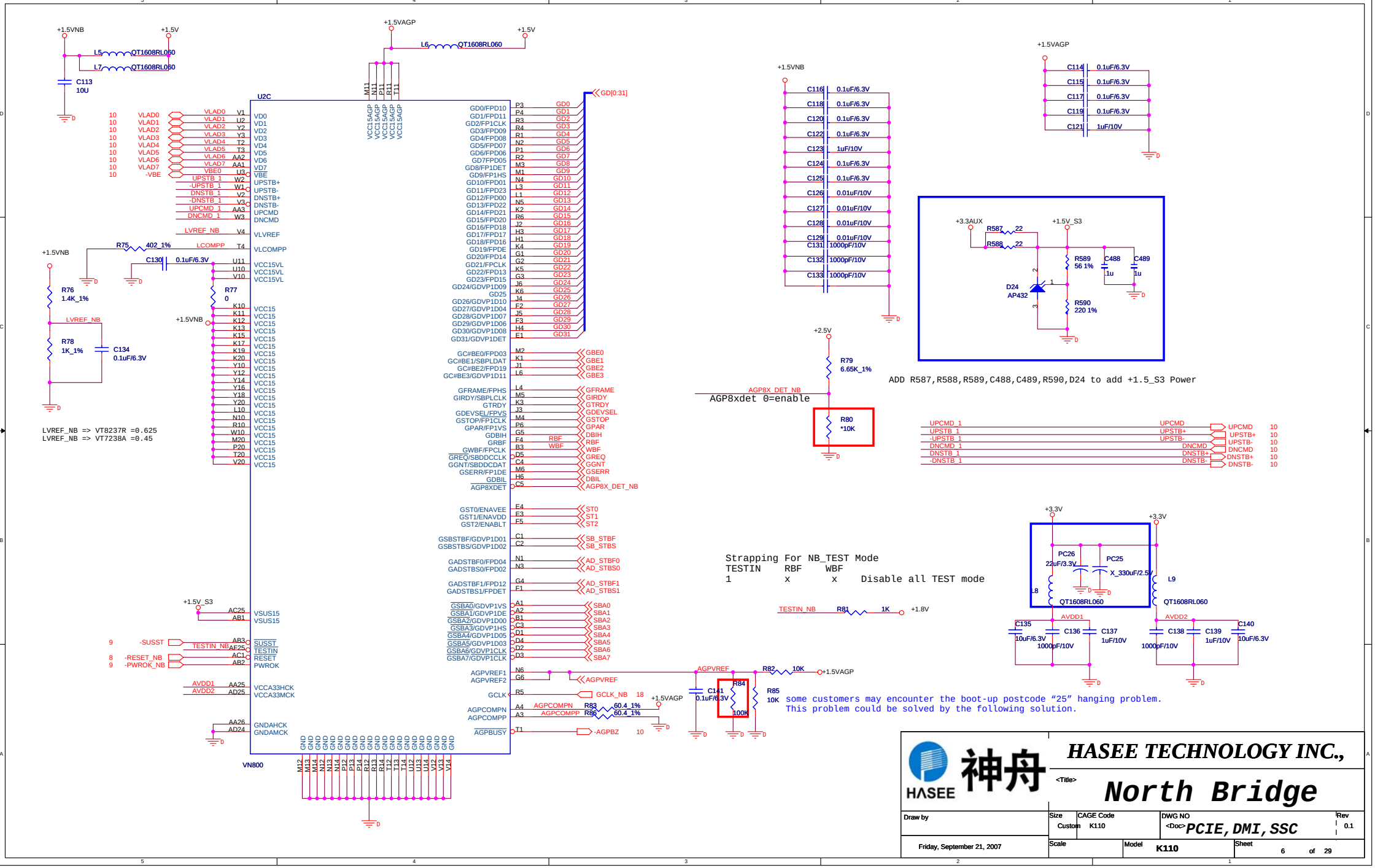

HASEE 神舟	HASEE TECHNOLOGY INC.,		
	<Title> North Bridge		
Draw by	Size: Custom	CAGE Code: K110	DWG NO: <Doc> PCIE, DMI, SSC
			Rev: 0.1
Friday, September 21, 2007	Scale	Model: K110	Sheet: 6 of 29

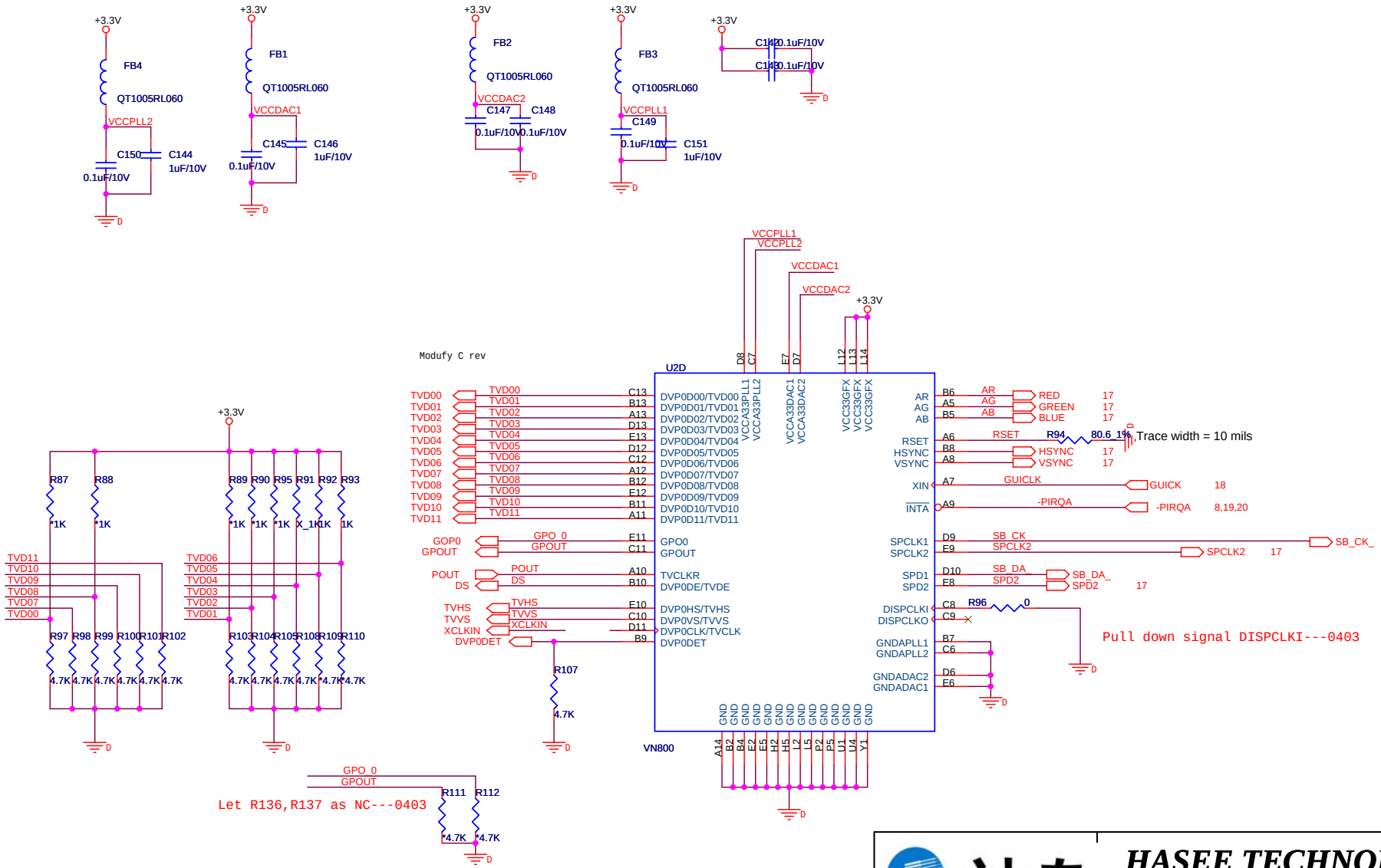

HASEE 神舟

HASEE TECHNOLOGY INC.,

<Title>

Draw by	Size	CAGE Code	DWG NO	Rev
	B	K110	<Doc>	0.1
Friday, September 21, 2007	Scale	Model K110	Sheet 7 of 29	

Noi

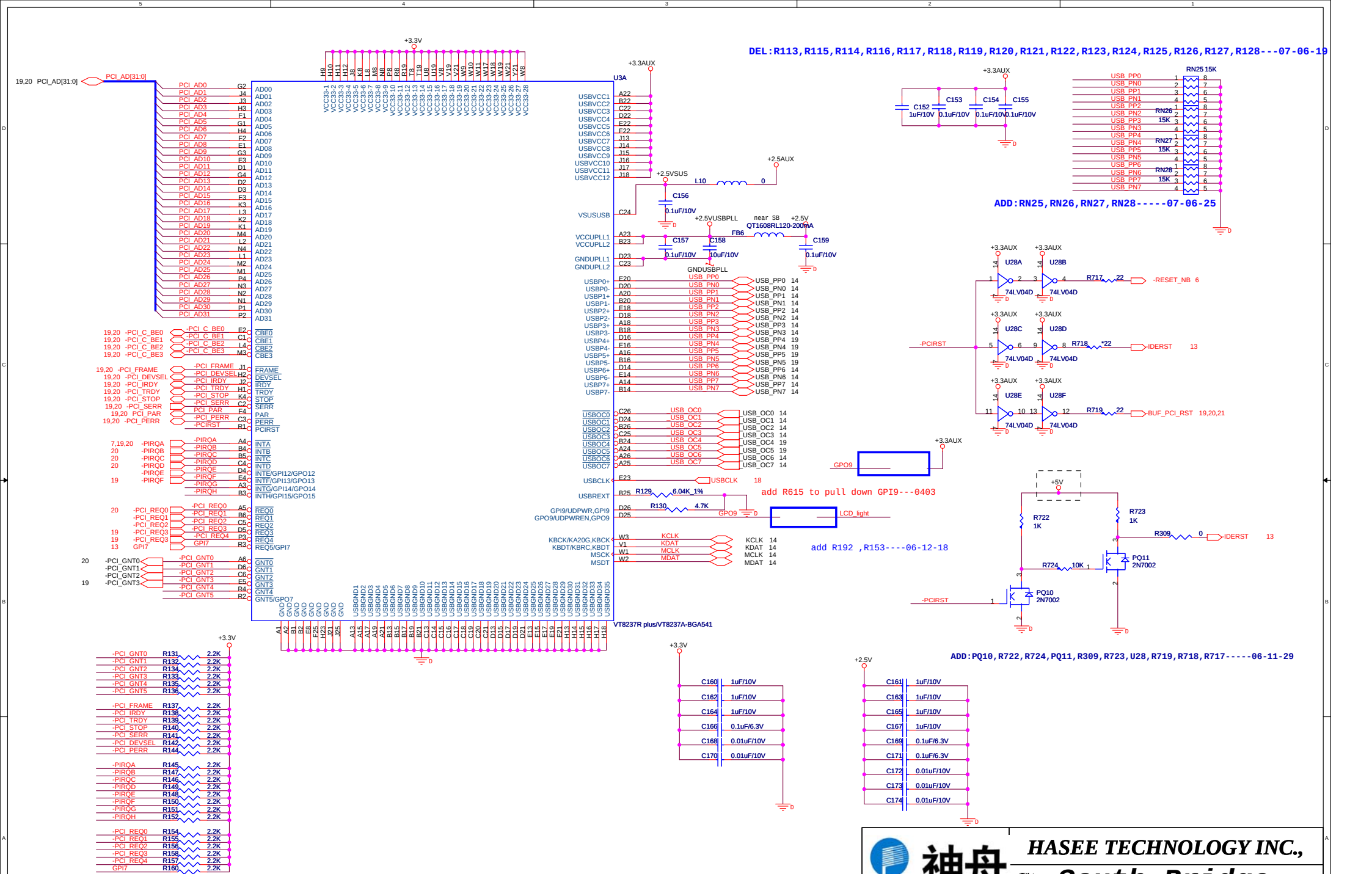
DEL:R113,R115,R114,R116,R117,R118,R119,R120,R121,R122,R123,R124,R125,R126,R127,R128---07-06-19
ADD:RN25,RN26,RN27,RN28-----07-06-25
add R615 to pull down GPI9---0403
add R192 ,R153----06-12-18
ADD:PQ10,R722,R724,PQ11,R309,R723,U28,R719,R718,R717-----06-11-29
DEL:L11,*L12,*R143,R153,U4,R159,R163,C175-----06-11-29
VT8237R plus/VT8237A-BGA541
U3A
U28A
U28B
U28C
U28D
U28E
U28F
74LV04D
PQ10
2N7002
PQ11
2N7002
LCD_light
GPO9
-RESET_NB
-PCIRST
IDERST
BUF_PCI_RST
USBCLK
KCLK
KDAT
MCLK
MDAT
+3.3V
+3.3AUX
+2.5AUX
+2.5VSUS
+2.5VUSBPLL
+2.5V
+5V
HASEE TECHNOLOGY INC.,
South Bridge
Draw by
Friday, September 21, 2007
Size
Custom
CAGE Code
K110
DWG NO
HOST, USB
Rev
0.1
Scale
Model
K110
Sheet
8
of
29

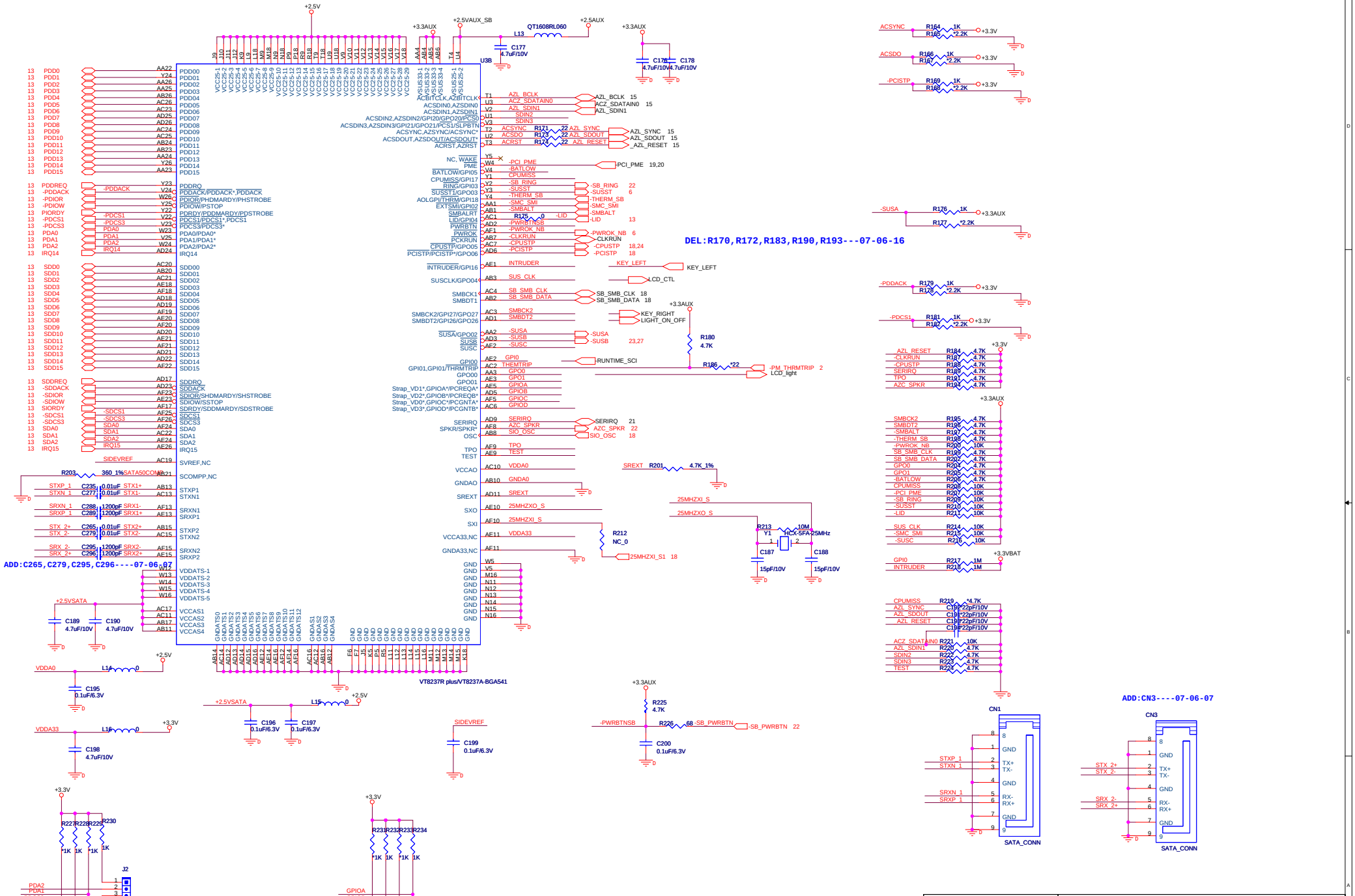
U3B
VT8237R plus/VT8237A-BGA541
DEL:R170,R172,R183,R190,R193---07-06-16
ADD:C265,C279,C295,C296----07-06-07
ADD:CN3----07-06-07
CN1
CN3
SATA_CONN
SATA_CONN
J2
H1X3
HASEE
神舟
HASEE TECHNOLOGY INC.,
<Title>
Draw by
Friday, September 21, 2007
Size
C
CAGE Code
K110
DWG NO
<Doc>
Rev
0.1
Scale
Model
K110
Sheet
9
of
29

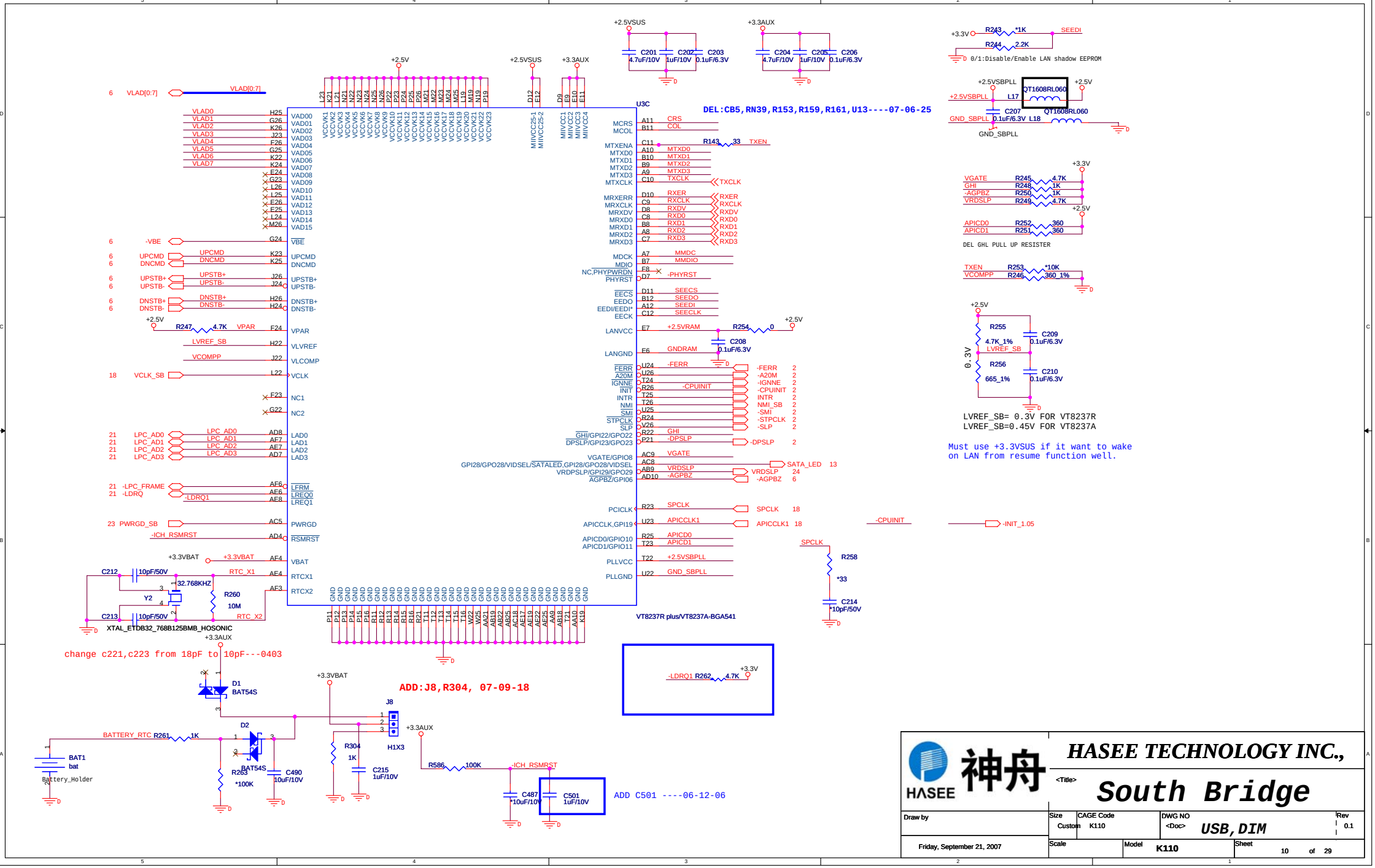
U3C
VT8237R plus/VT8237A-BGA541
DEL:CB5,RN39,R153,R159,R161,U13----07-06-25
+2.5VSUS
+3.3AUX
+2.5V
+3.3V
+3.3VBAT
C201 4.7uF/10V
C202 1uF/10V
C203 0.1uF/6.3V
C204 4.7uF/10V
C205 1uF/10V
C206 0.1uF/6.3V
R243 *1K
R244 2.2K
SEEDI
0/1:Disable/Enable LAN shadow EEPROM
QT1608RL060
L17
L18
C207 0.1uF/6.3V
GND_SBPLL
R245 4.7K
R248 1K
R250 1K
R249 4.7K
R252 360
R251 360
DEL GHL PULL UP RESISTER
R253 *10K
R246 360_1%
R255 4.7K_1%
R256 665_1%
C209 0.1uF/6.3V
C210 0.1uF/6.3V
LVREF_SB= 0.3V FOR VT8237R
LVREF_SB=0.45V FOR VT8237A
Must use +3.3VSUS if it want to wake on LAN from resume function well.
R247 4.7K
C208 0.1uF/6.3V
R254 0
R258 *33
C214 *10pF/50V
XTAL_ETDB32_768B125BMB_HOSONIC
32.768KHZ
C212 10pF/50V
C213 10pF/50V
R260 10M
change c221,c223 from 18pF to 10pF---0403
D1 BAT54S
D2 BAT54S
BAT1 bat
Battery_Holder
R261 1K
R263 *100K
C490 10uF/10V
R304 1K
C215 1uF/10V
J8
H1X3
ADD:J8,R304, 07-09-18
R586 100K
C487 *10uF/10V
C501 1uF/10V
ADD C501 ----06-12-06
-LDRQ1 R262 4.7K
-INIT_1.05
HASEE TECHNOLOGY INC.,
神舟
South Bridge
USB,DIM
Draw by
Friday, September 21, 2007
Size Custom
CAGE Code K110
DWG NO
Rev 0.1
Scale
Model K110
Sheet 10 of 29

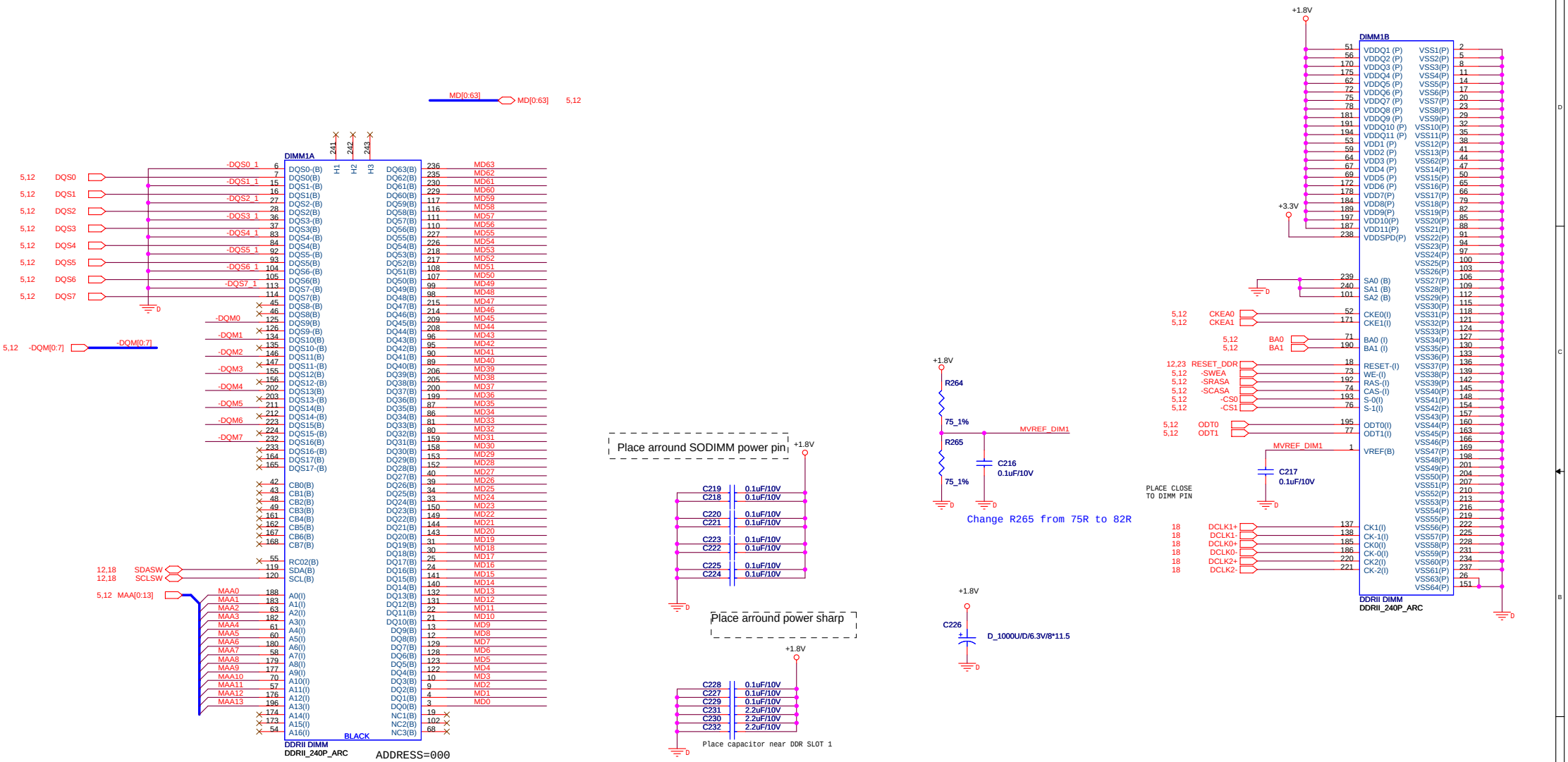

HASEE 神舟

HASEE TECHNOLOGY INC.,

<Title>

Memory Connector

Draw by	Size: Custom	CAGE Code: K110	DWG NO: <Doc> DDR2 Slot 1	Rev: 0.1
Friday, September 21, 2007	Scale	Model: K110	Sheet: 11 of 29	

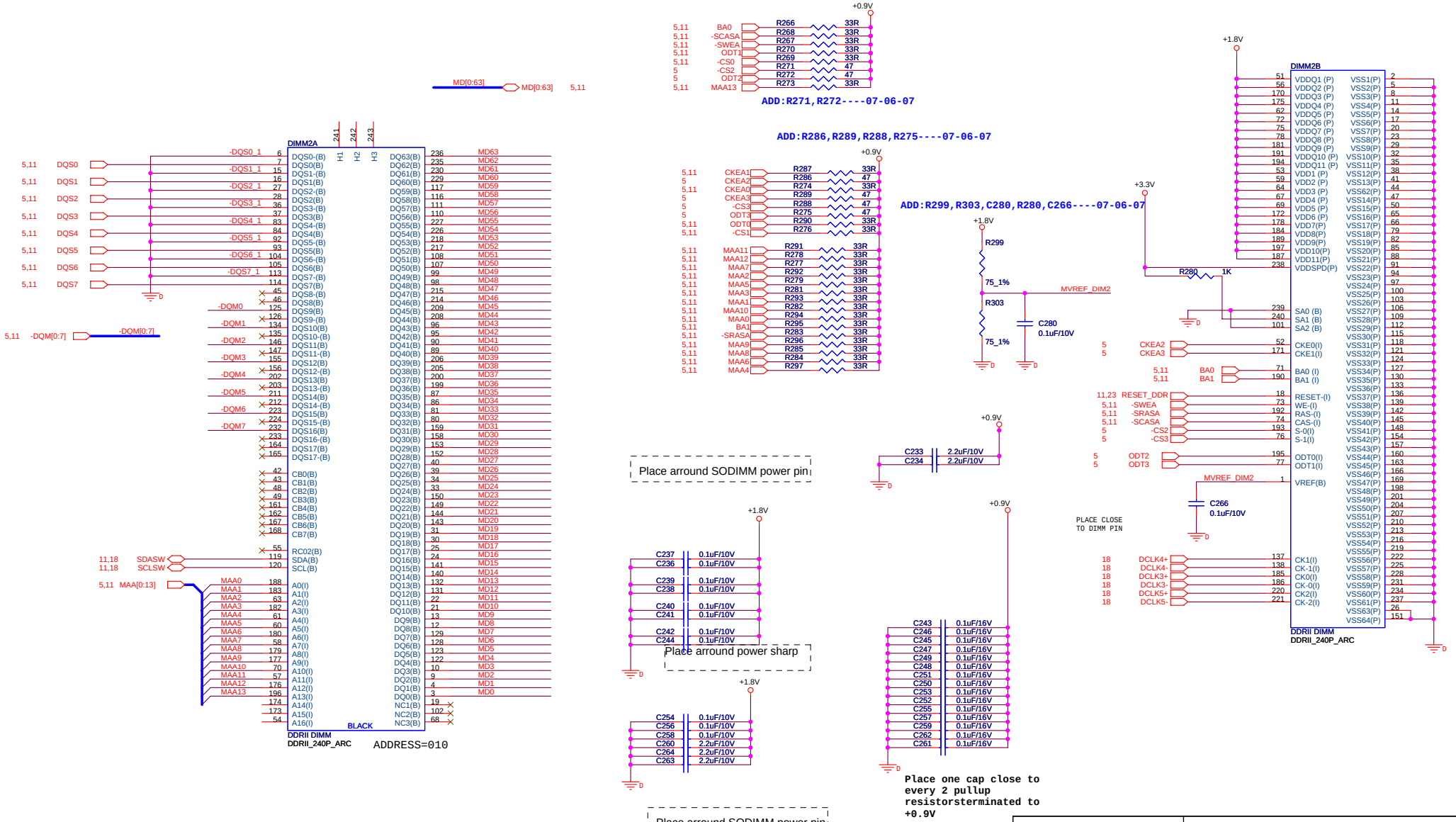

HASEE 神舟

HASEE TECHNOLOGY INC.,

<Title>

Memory Connector

Draw by	Size: Custom	CAGE Code: K110	DWG NO: <Doc> DDR2 Slot 2	Rev: 0.1
Friday, September 21, 2007	Scale	Model: K110	Sheet: 12 of 29	

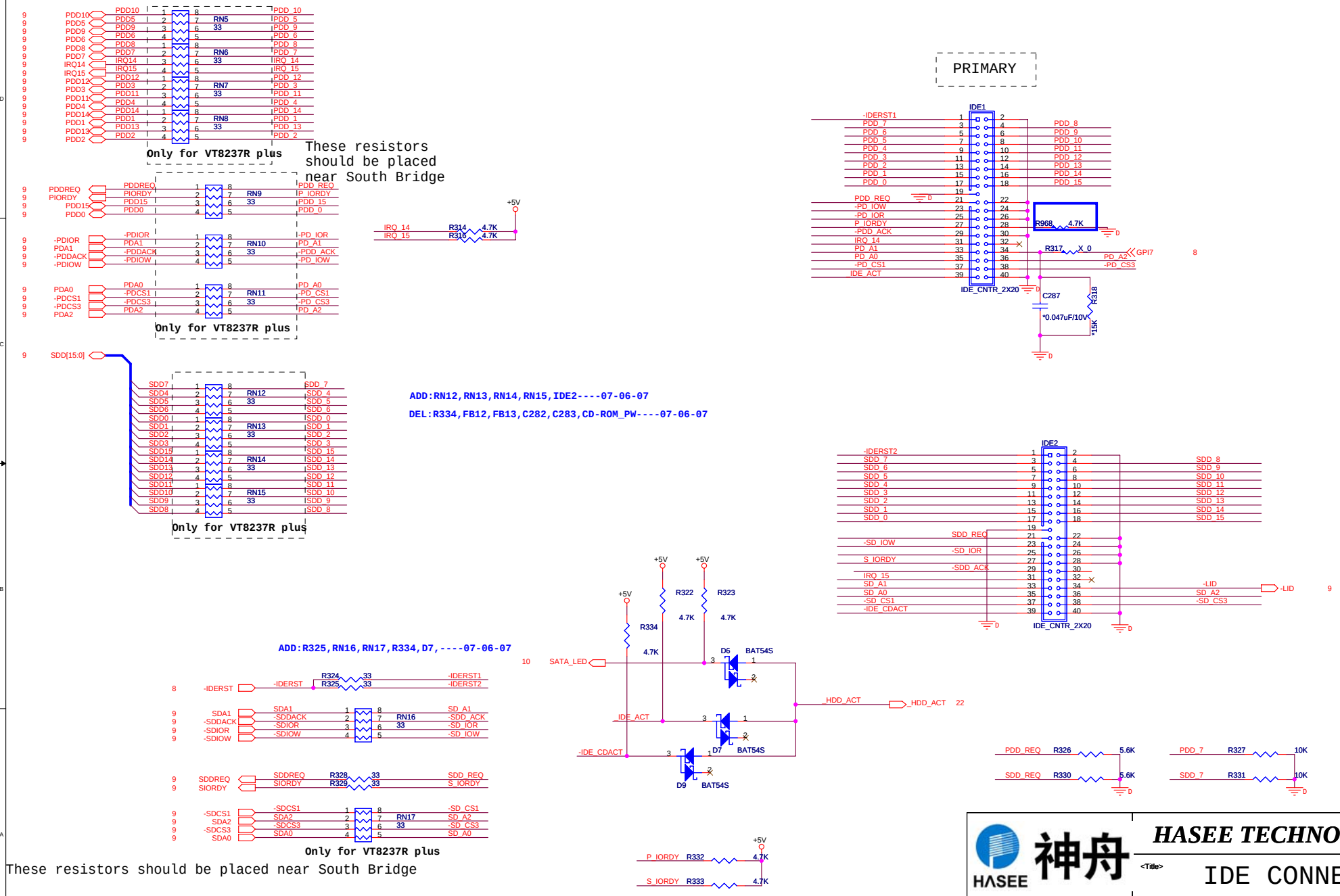

HASEE 神舟

HASEE TECHNOLOGY INC.,

<Title>

IDE CONNECTOR

Draw by	Size	CAGE Code	DWG NO	Rev
Tomy Xu	Custom	K110	<Doc>	0.1
Friday, September 21, 2007	Scale	Model K110	Sheet 13 of 29	

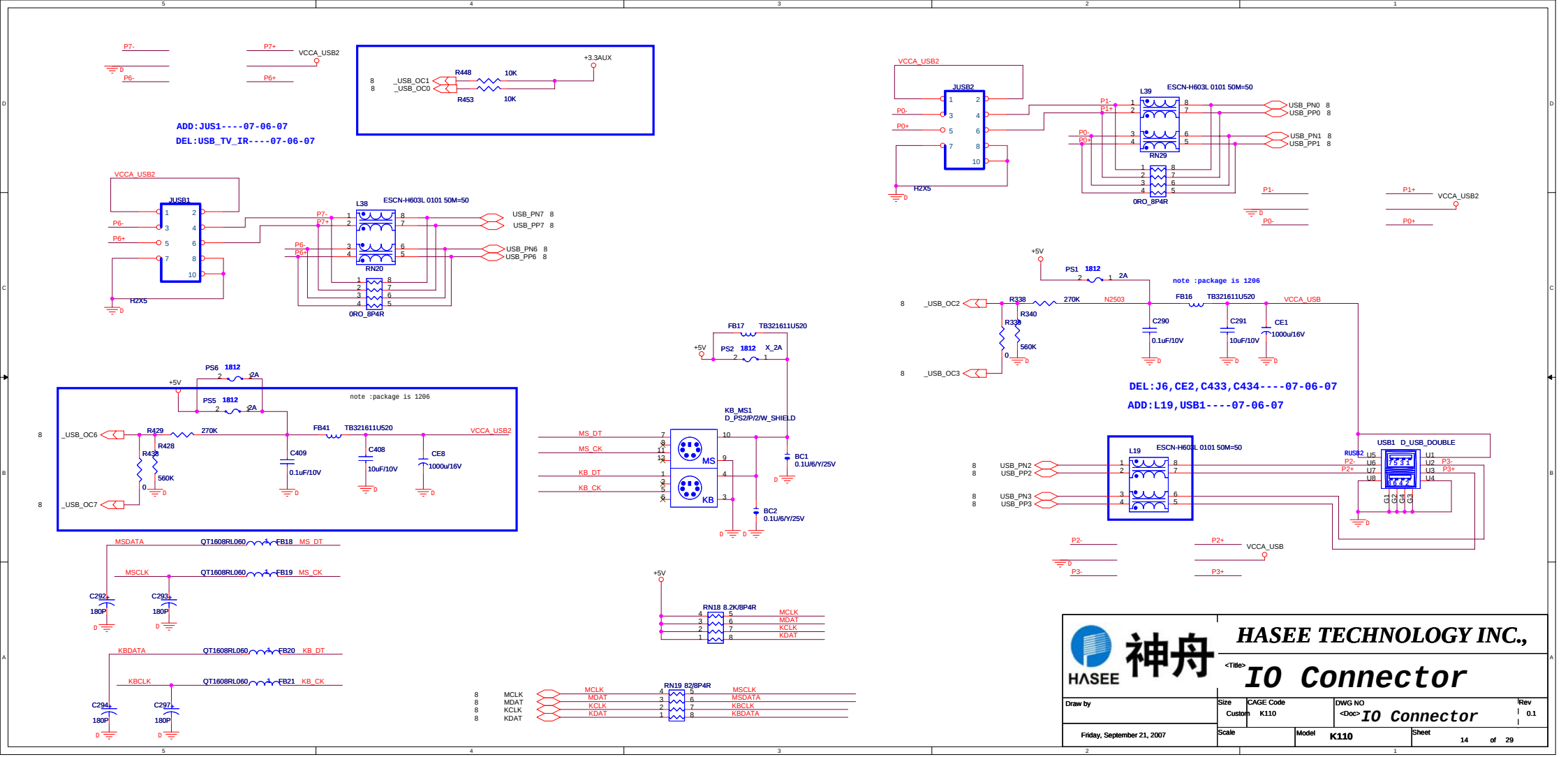

HASEE 神舟

HASEE TECHNOLOGY INC.,

<Title> **IO Connector**

Draw by	Size	CAGE Code	DWG NO	Rev
	Custom	K110	<Doc> IO Connector	0.1
Friday, September 21, 2007	Scale	Model K110	Sheet 14 of 29	

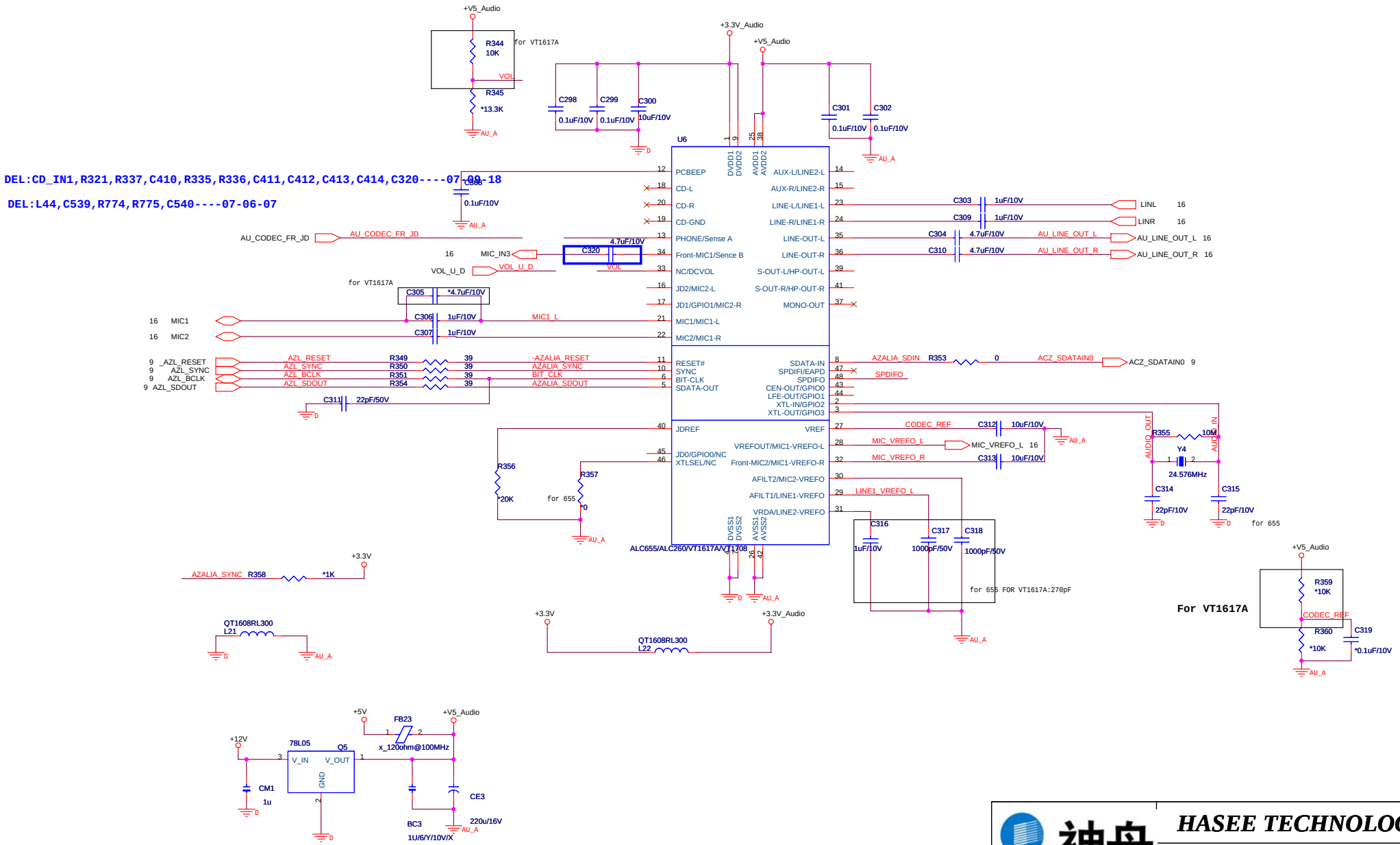

HASEE 神舟	HASEE TECHNOLOGY INC.,		
	<Title> Audio Codec,Docking		
Draw by	Size: Custom	CAGE Code: K110	DWG NO: <Doc> Audio,Codec,Docking
			Rev: 0.1
Friday, September 21, 2007	Scale	Model: K110	Sheet: 15 of 29

DEL:RCA-222V,C410,C411----07-06-07

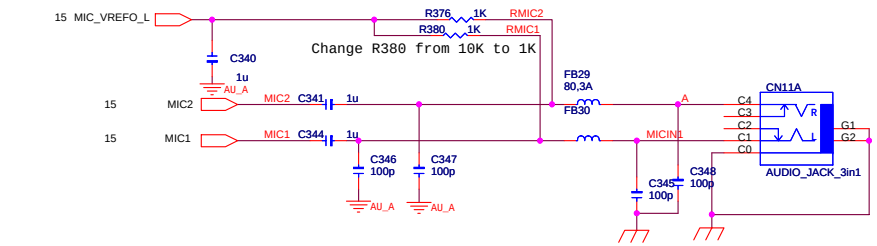

ADD:R371,C415,J4,----07-06-07

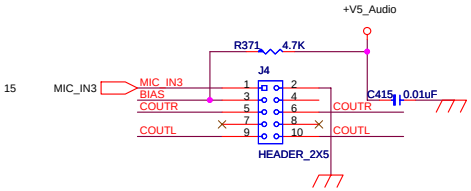

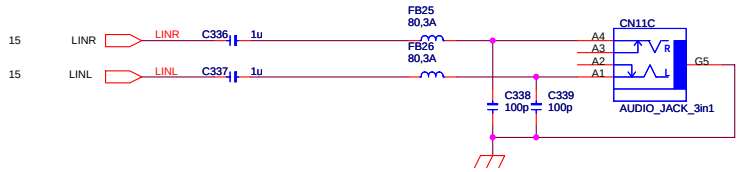

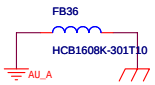

ADD:FB36 07-09-18

DEL:R381

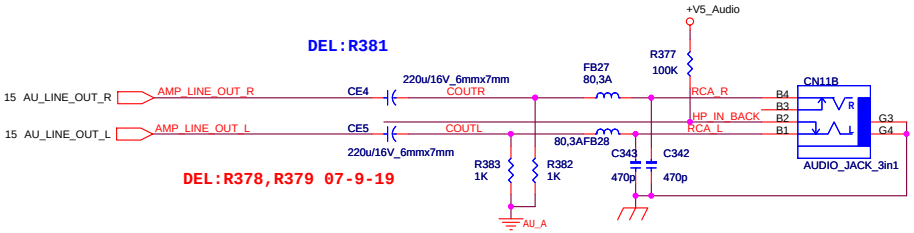

DEL:R378,R379 07-9-19

HASEE 神舟	HASEE TECHNOLOGY INC.,			
	<Title> Audio Jack			
Draw by	Size Custom	CAGE Code K110	DWG NO <Doc> Audio Jack	Rev 0.1
Friday, September 21, 2007	Scale	Model K110	Sheet 16 of 29	

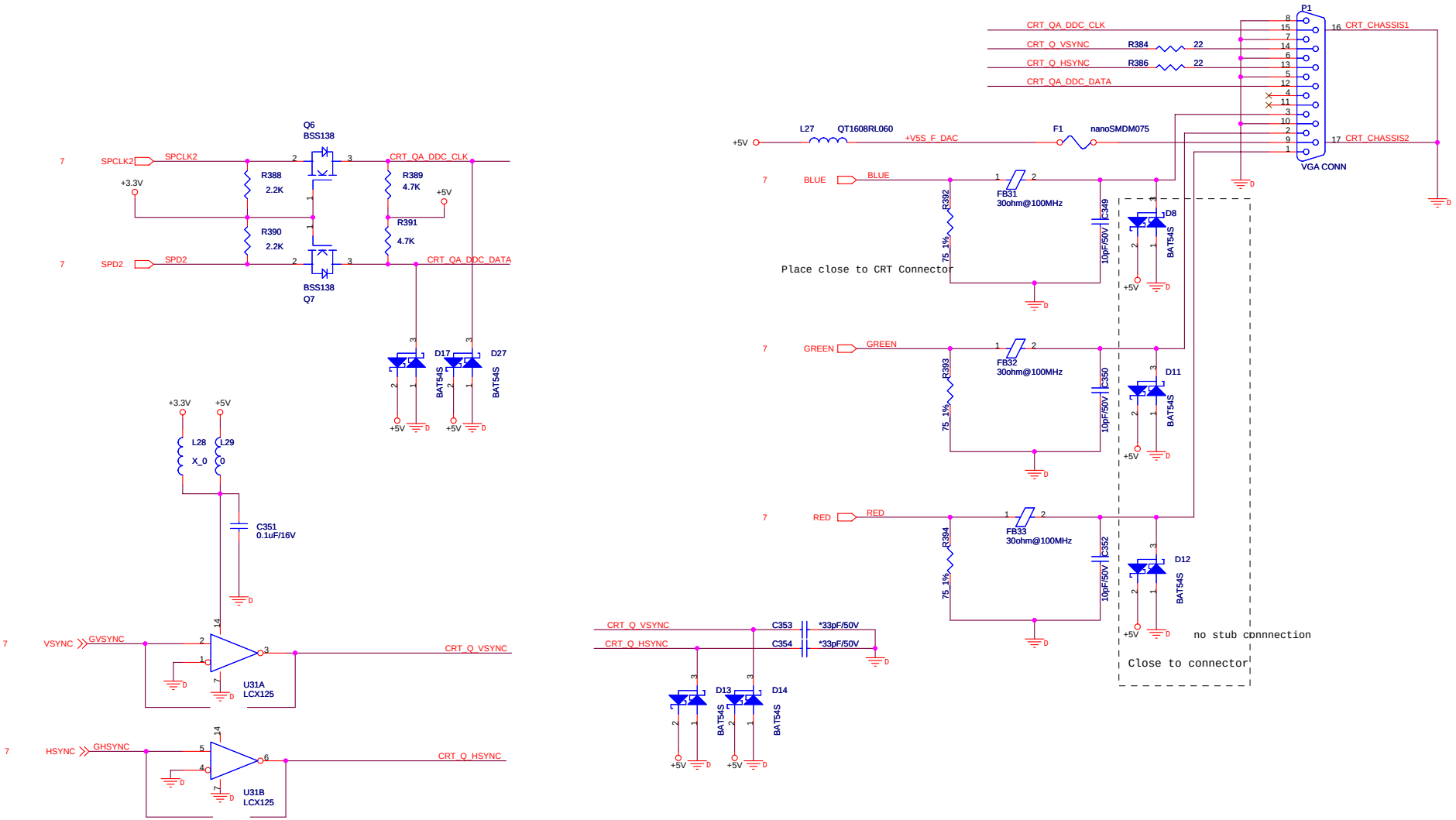

HASEE 神舟	HASEE TECHNOLOGY INC.,			
	<Title> CRT Connector			
Draw by	Size: Custom	CAGE Code: K110	DWG NO: <Doc> CRT Connector	Rev: 0.1
Friday, September 21, 2007	Scale	Model: K110	Sheet: 17 of 29	

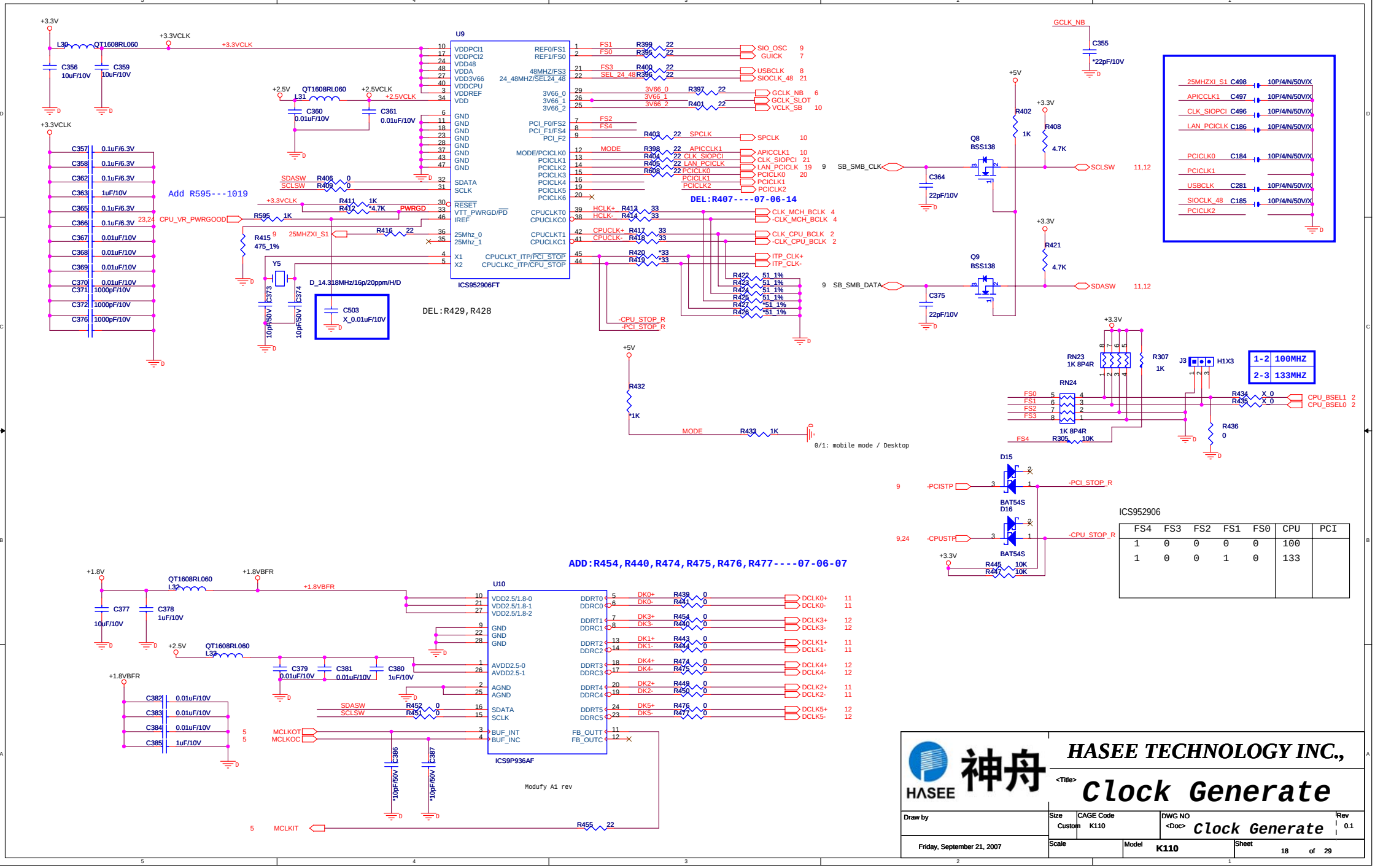
U9
ICS952906FT
Add R595---1019
DEL:R407----07-06-14
DEL:R429,R428
D_14.318MHz/16p/20ppm/H/D
C503 X_0.01uF/10V
Q8 BSS138
Q9 BSS138
0/1: mobile mode / Desktop
1-2 100MHZ
2-3 133MHZ
ICS952906
FS4 FS3 FS2 FS1 FS0 CPU PCI
1 0 0 0 0 100
1 0 0 1 0 133
ADD:R454,R440,R474,R475,R476,R477----07-06-07
U10
ICS9P936AF
Modufy A1 rev
HASEE TECHNOLOGY INC.,
Clock Generate
Friday, September 21, 2007
Size Custom
CAGE Code K110
DWG NO Clock Generate
Rev 0.1
Model K110
Sheet 18 of 29

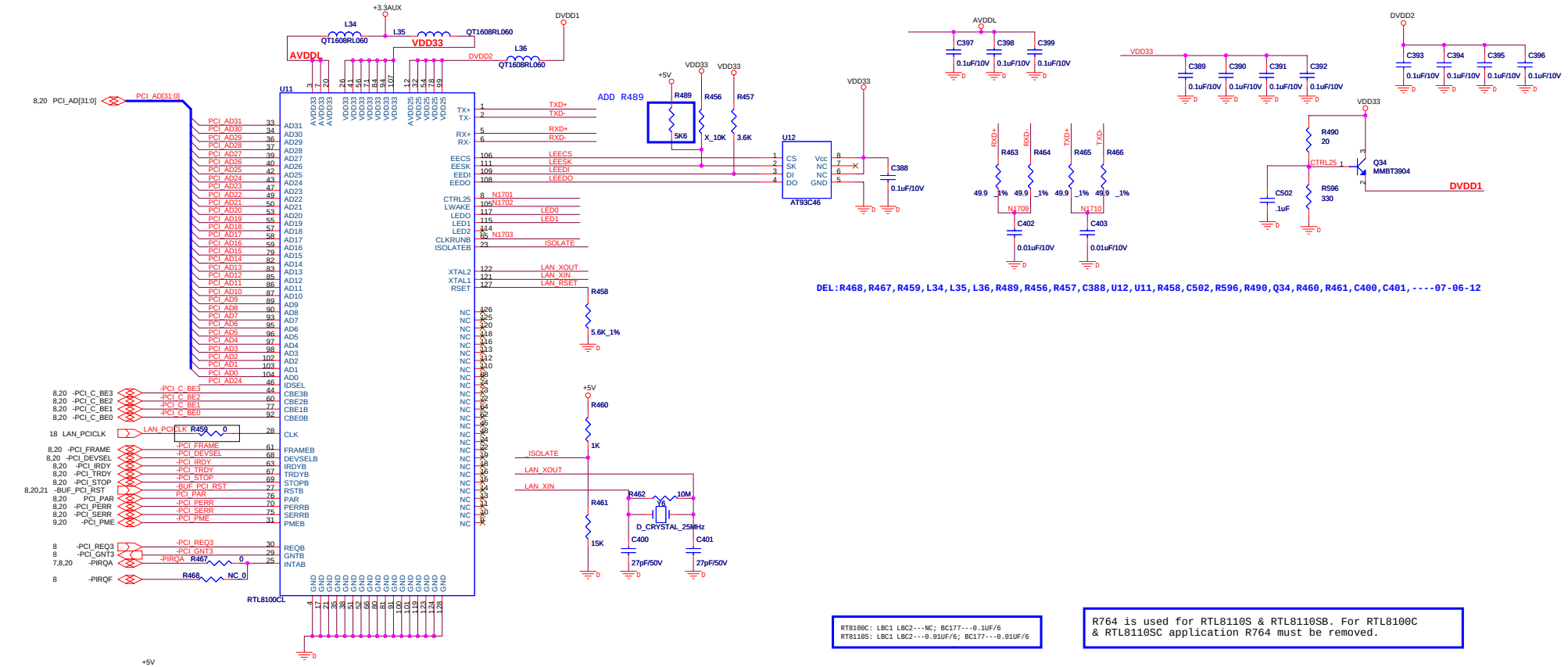

DEL:R468,R467,R459,L34,L35,L36,R489,R456,R457,C388,U12,U11,R458,C502,R596,R490,Q34,R460,R461,C400,C401,----07-06-12

RT8100C: LBC1 LBC2---NC; BC177---0.1UF/6
RT8110S: LBC1 LBC2---0.01UF/6; BC177---0.01UF/6

R764 is used for RTL8110S & RTL8110SB. For RTL8100C & RTL8110SC application R764 must be removed.

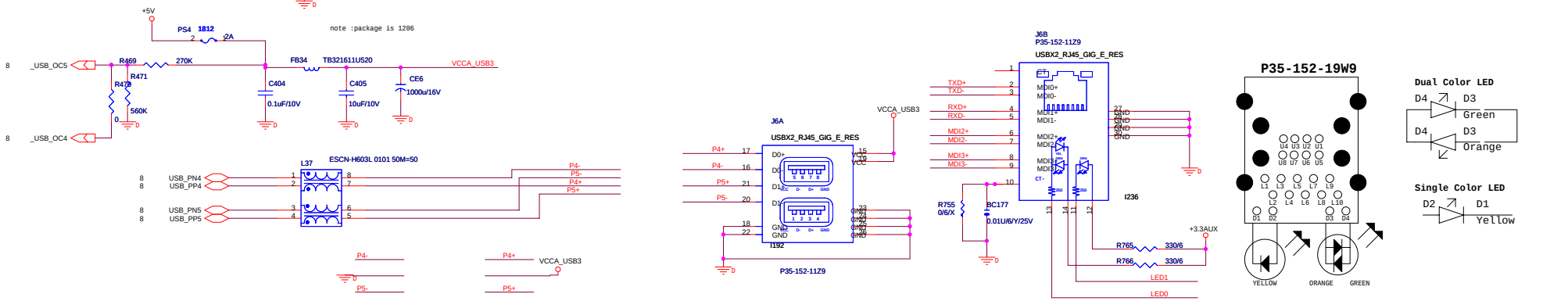

DEL:C485,FB36,R387,R364,U21,R367,RN37,R385,R375,R373,RN36,R462,Y6,C474,C475-----07-06-25

HASEE 神舟	HASEE TECHNOLOGY INC.,			
	<Title>			
Draw by	Size C	CAGE Code K110	DWG NO <Doc>	Rev 0.1
Friday, September 21, 2007	Scale	Model K110	Sheet 19 of 29	

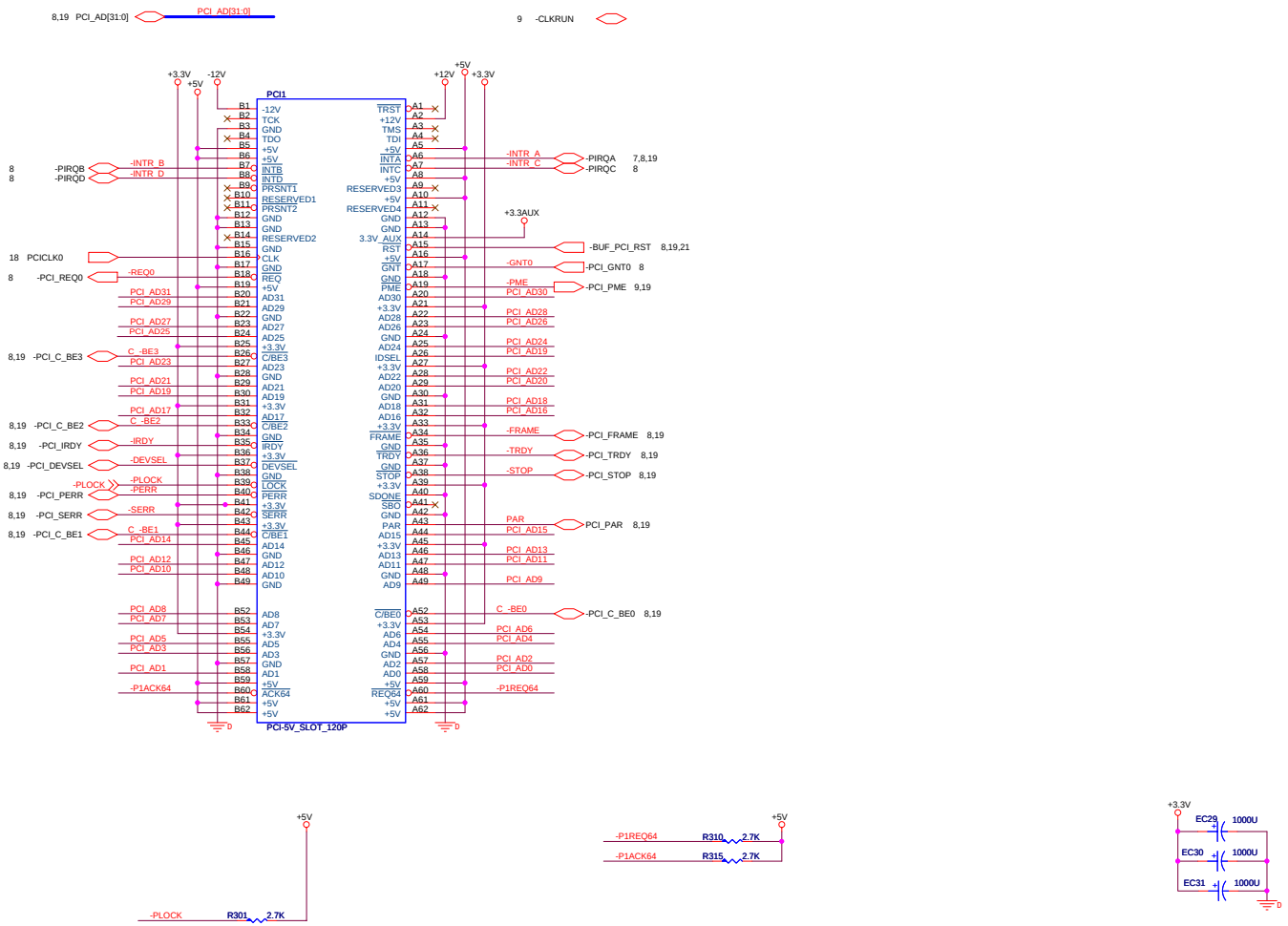

HASEE 神舟	HASEE TECHNOLOGY INC.,		
	<Title>		
Draw by	Size C	CAGE Code K110	DWG NO <Doc>	Rev 0.1
Friday, September 21, 2007	Scale	Model K110	Sheet 20 of 29

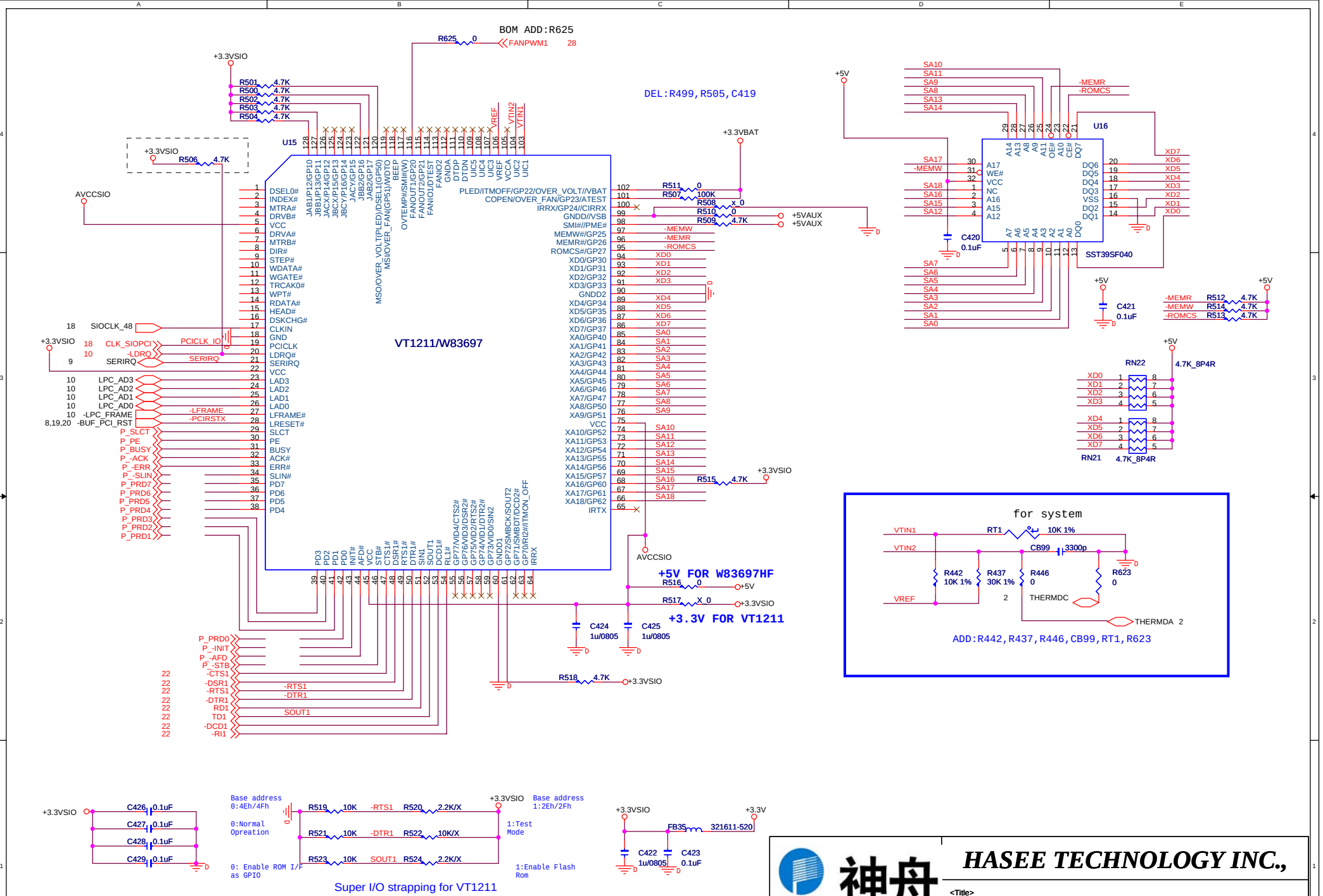
BOM ADD:R625
R625 0
FANPWM1 28
+3.3VSIO
R501 4.7K
R500 4.7K
R502 4.7K
R503 4.7K
R504 4.7K
R506 4.7K
U15
AVCCSIO
VT1211/W83697
DEL:R499,R505,C419
+3.3VBAT
R511 0
R507 100K
R508 X 0
R510 0
R509 4.7K
+5VAUX
+5VAUX
R515 4.7K
+3.3VSIO
AVCCSIO
+5V FOR W83697HF
R516 0
+5V
R517 X 0
+3.3VSIO
+3.3V FOR VT1211
C424 1u/0805
C425 1u/0805
R518 4.7K
+3.3VSIO
SIOCLK_48
CLK_SIOPCI
PCICLK_IO
-LDRQ
SERIRQ
LPC_AD3
LPC_AD2
LPC_AD1
LPC_AD0
-LPC_FRAME
-BUF_PCI_RST
-LFRAME
-PCIRSTX
P_SLCT
P_PE
P_BUSY
P_-ACK
P_-ERR
P_-SLIN
P_PRD7
P_PRD6
P_PRD5
P_PRD4
P_PRD3
P_PRD2
P_PRD1
P_PRD0
P_-INIT
P_-AFD
P_-STB
-CTS1
-DSR1
-RTS1
-DTR1
RD1
TD1
-DCD1
-RI1
SOUT1
+5V
SA10
SA11
SA9
SA8
SA13
SA14
-MEMR
-ROMCS
U16
SST39SF040
SA17
-MEMW
SA18
SA16
SA15
SA12
SA7
SA6
SA5
SA4
SA3
SA2
SA1
SA0
XD7
XD6
XD5
XD4
XD3
XD2
XD1
XD0
C420 0.1uF
C421 0.1uF
R512 4.7K
R514 4.7K
R513 4.7K
RN22 4.7K_8P4R
RN21 4.7K_8P4R
for system
VTIN1
VTIN2
VREF
RT1 10K 1%
CB99 3300p
R442 10K 1%
R437 30K 1%
R446 0
R623 0
THERMDC
THERMDA
ADD:R442,R437,R446,CB99,RT1,R623
C426 0.1uF
C427 0.1uF
C428 0.1uF
C429 0.1uF
Base address 0:4Eh/4Fh
0:Normal Opreation
0: Enable ROM I/F as GPIO
R519 10K -RTS1 R520 2.2K/X
R521 10K -DTR1 R522 10K/X
R523 10K SOUT1 R524 2.2K/X
Base address 1:2Eh/2Fh
1:Test Mode
1:Enable Flash Rom
Super I/O strapping for VT1211
FB35 321611-520
C422 1u/0805
C423 0.1uF
+3.3V
HASEE
神舟
HASEE TECHNOLOGY INC.,
<Title>
Draw by
Size C
CAGE Code K110
DWG NO <Doc>
Rev 0.1
Friday, September 21, 2007
Scale
Model K110
Sheet 21 of 29

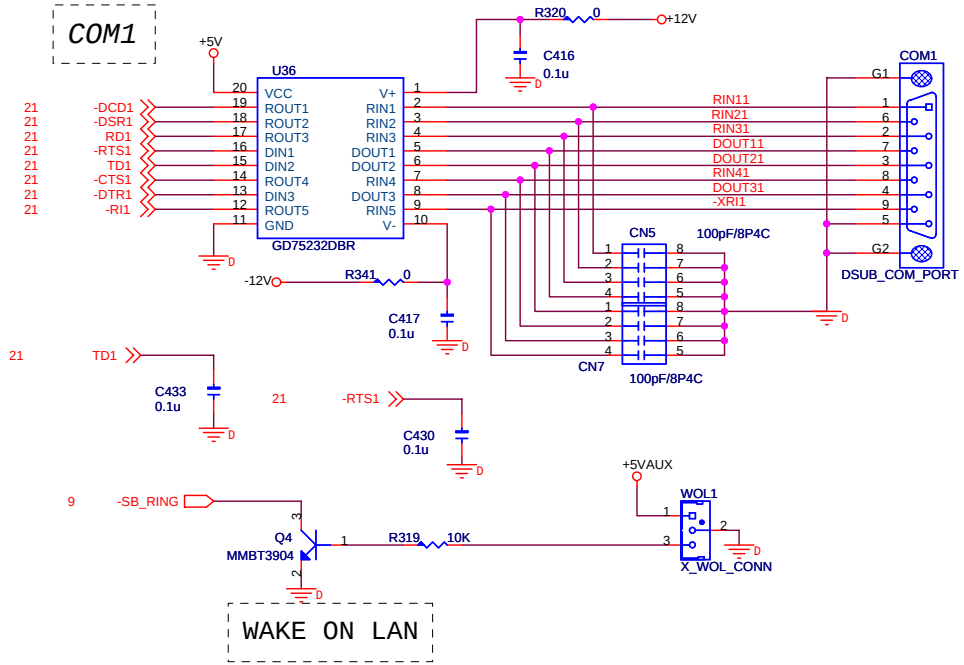

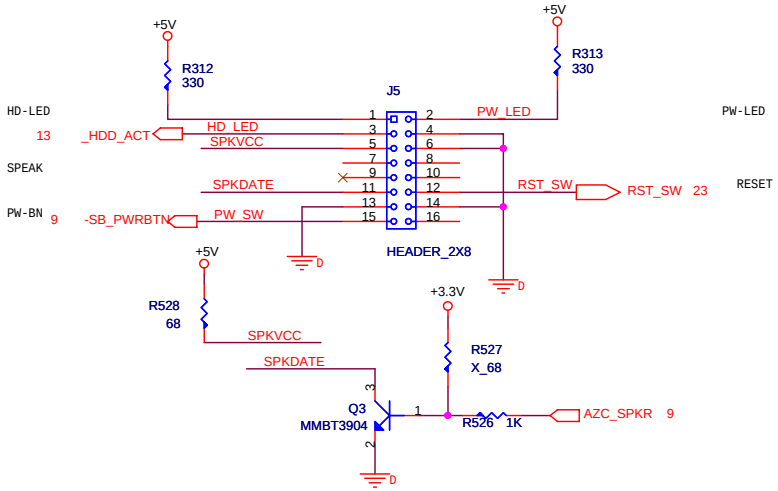

HASEE 神舟

HASEE TECHNOLOGY INC.,

<Title>

Draw by	Size B	CAGE Code K110	DWG NO <Doc>	Rev 0.1
Friday, September 21, 2007	Scale	Model K110	Sheet 22 of 29	

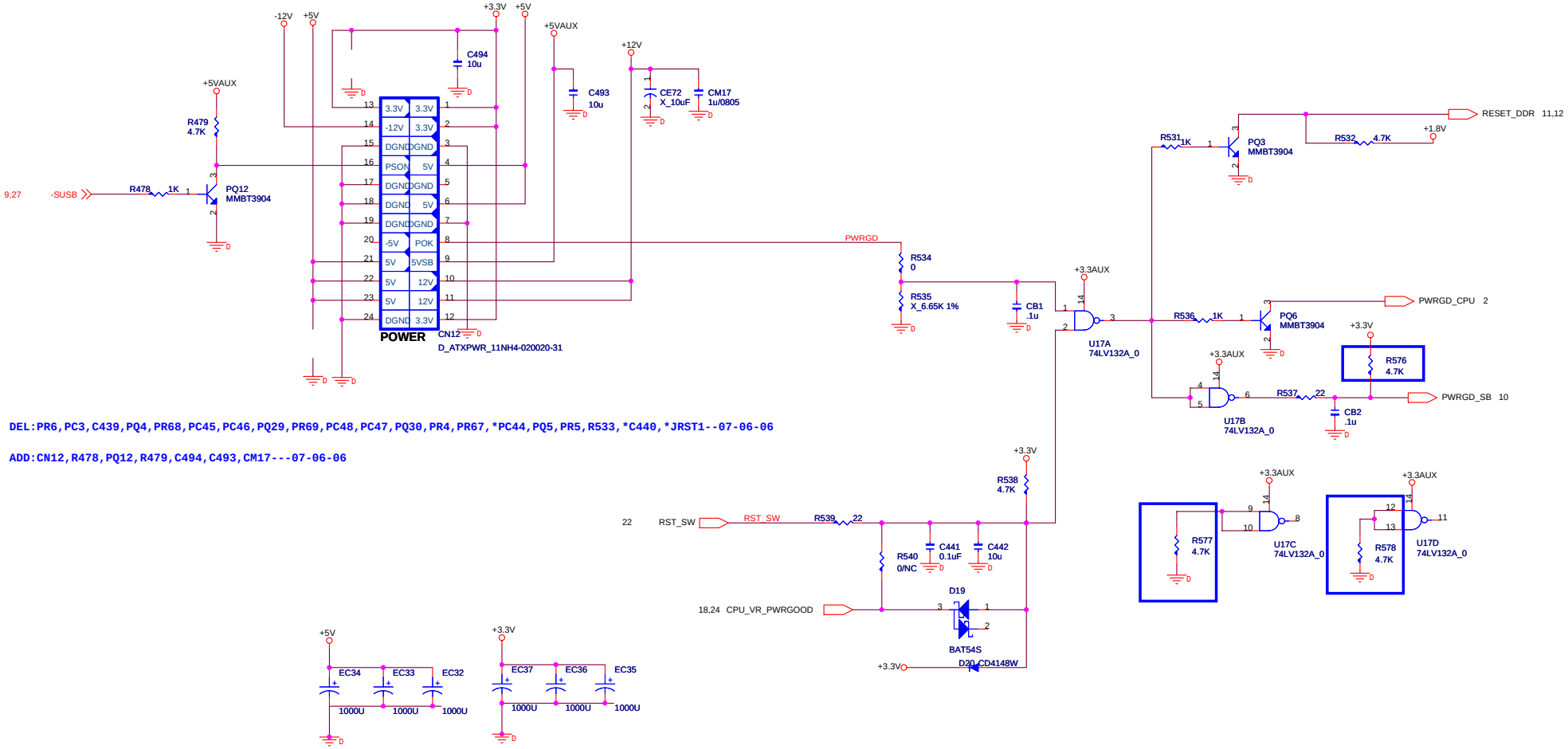

HASEE 神舟	HASEE TECHNOLOGY INC.,			
	<Title> Power Control			
Draw by	Size Custom	CAGE Code K110	DWG NO <DWG> Power OK Control	Rev 0.1
Friday, September 21, 2007	Scale	Model K110	Sheet 23 of 29	

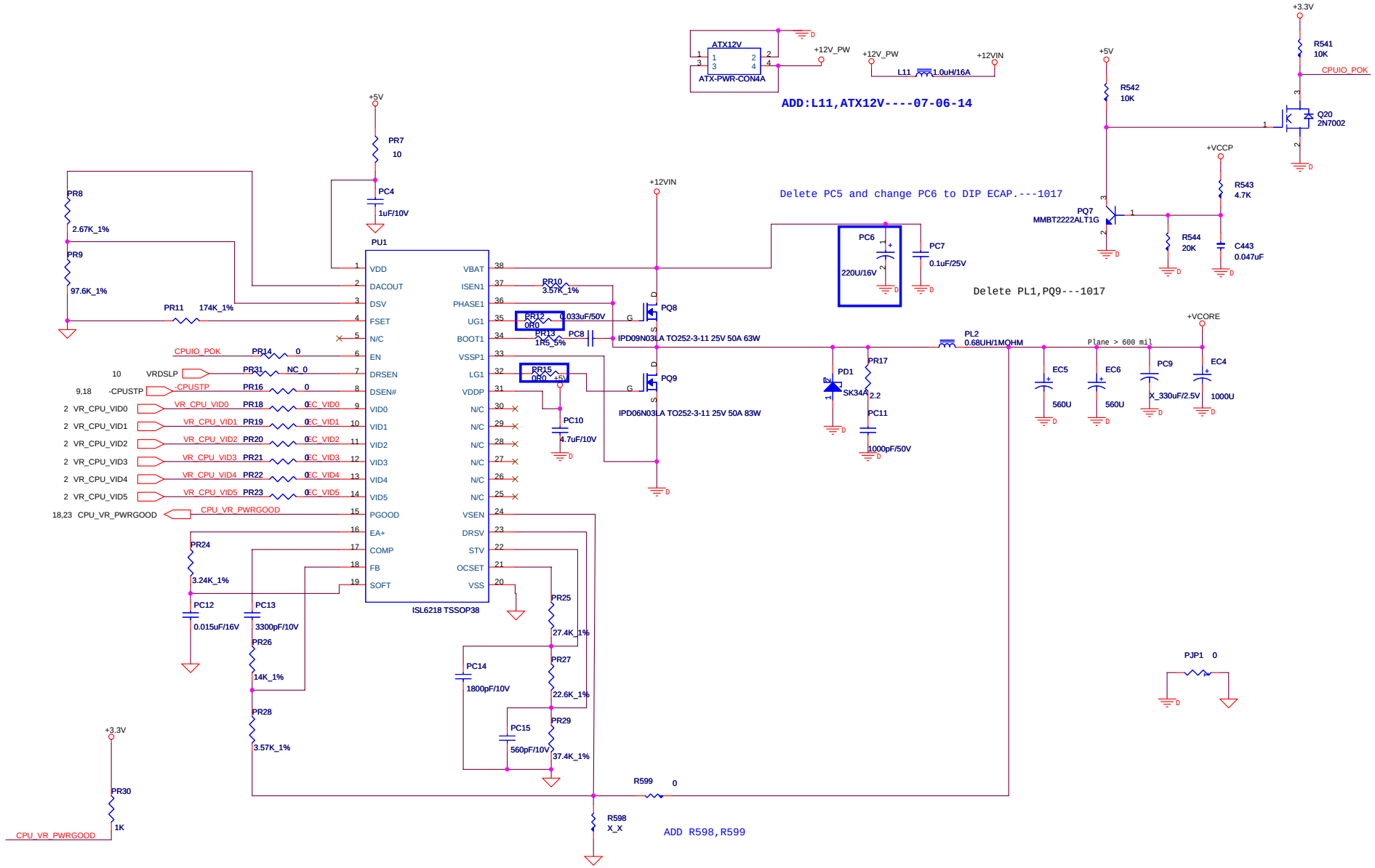

HASEE 神舟

HASEE TECHNOLOGY INC.,

<Title> **CPU Core Power**

Draw by	Size: Custom	CAGE Code: K110	DWG NO: <Doc> CPU Core Power	Rev: 0.1
Friday, September 21, 2007	Scale	Model: K110	Sheet: 24 of 29	

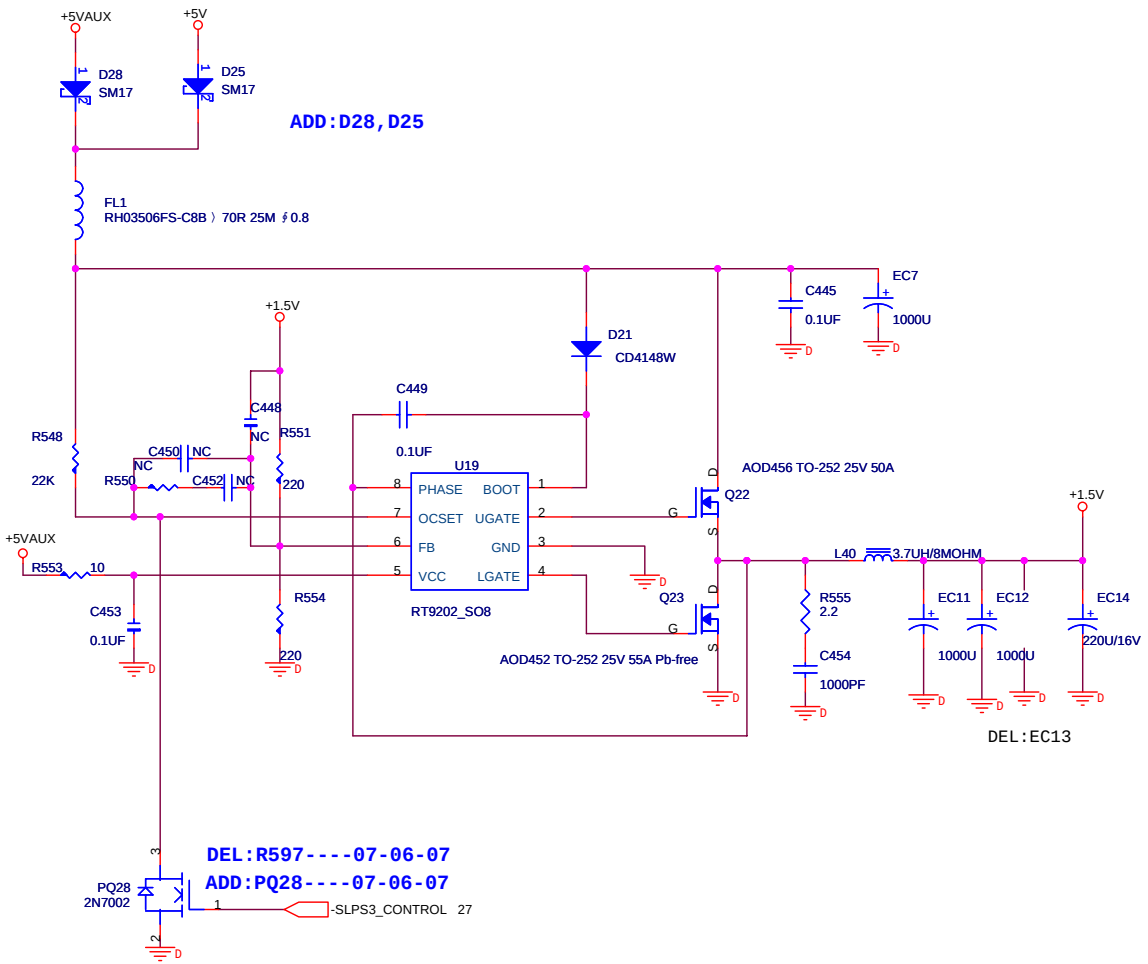

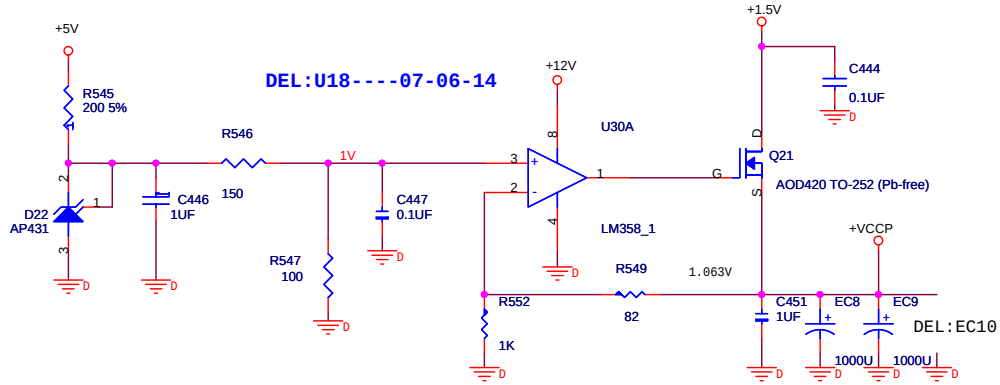

HASEE 神舟	HASEE TECHNOLOGY INC.,			
	<Title>			
Draw by	Size B	CAGE Code K110	DWG NO <Doc>	Rev 0.1
Friday, September 21, 2007	Scale	Model K110	Sheet 25 of 29	

GM

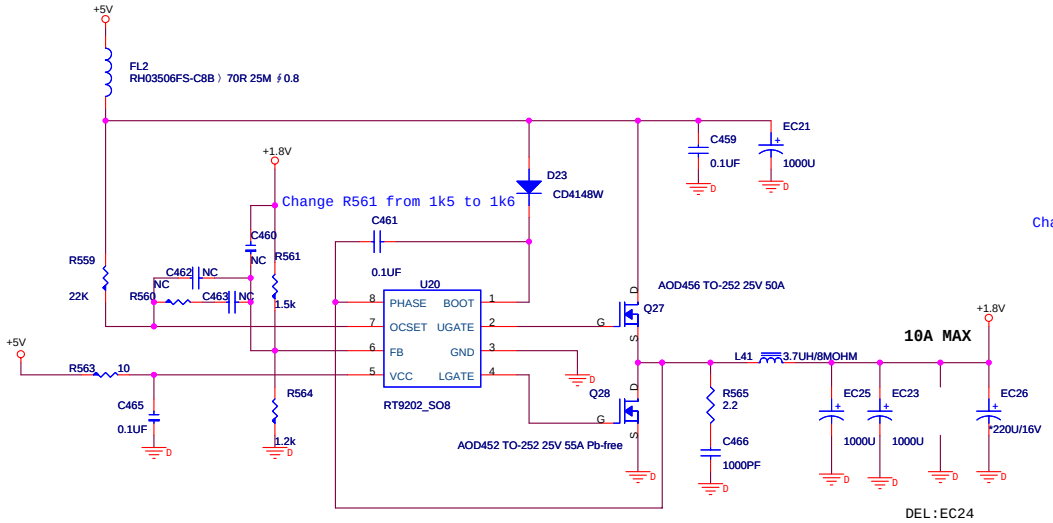

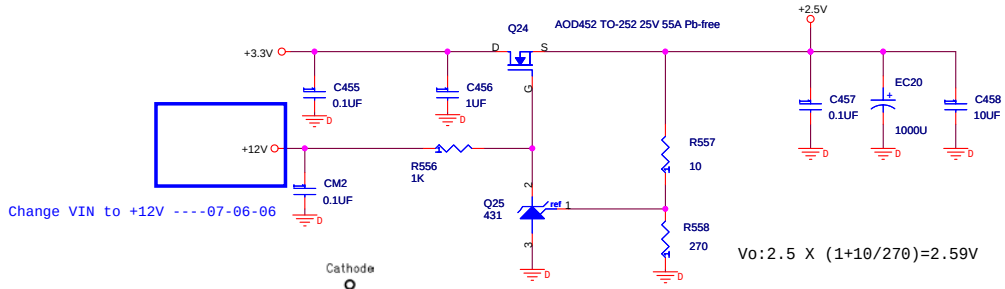

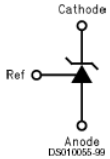

Suspend Power for SB

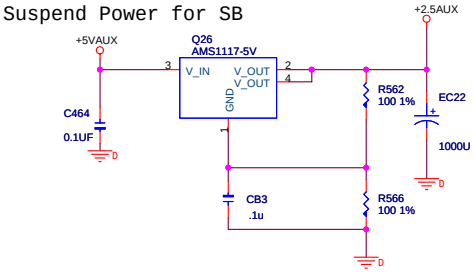

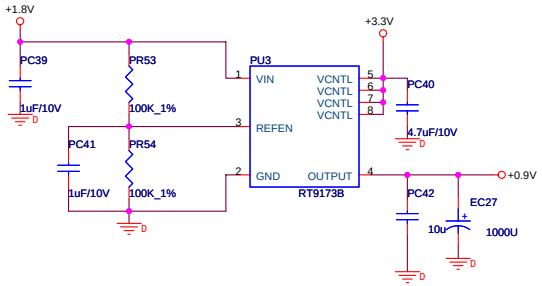

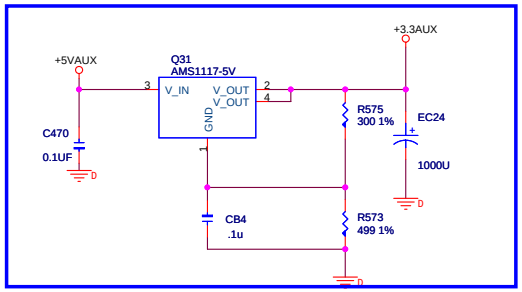

ADD:C470,Q31,CB4,R575,R573,EC24---07-06-06

DEL:R298,R303,R306,R288,Q31,R304,R308,C413,C415,R300,R299,C435,R312,D29,R301,C436,R310,U13,C437,C414,R474,R475,R454,PQ16,Q32,U60,PD9,PD4,L42,C416,EC33,EC32,EC34,C470,12V_PW----07-06-06

HASEE 神舟	HASEE TECHNOLOGY INC.,			
	<Title> DDR Power			
Draw by	Size Custom	CAGE Code K110	DWG NO <Doc> 0.9V,2.5V,1.8V,12V	Rev 0.1
Monday, July 16, 2007	Scale	Model K110	Sheet 26 of 29	

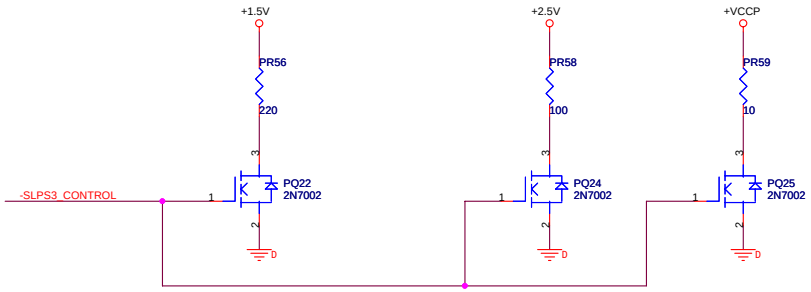

DEL:PR55,PQ21,PR57,PQ23----07-06-25

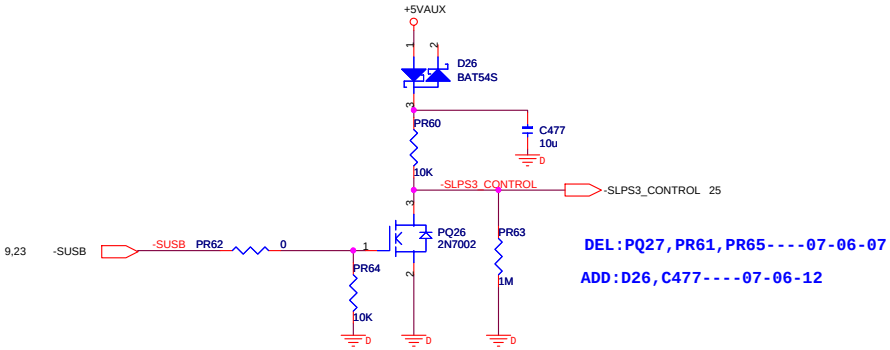

DEL:PQ27,PR61,PR65----07-06-07

ADD:D26,C477----07-06-12

HASEE 神舟	HASEE TECHNOLOGY INC.,			
	<Title> System Power Control			
Draw by	Size Custom	CAGE Code K110	DWG NO <Doc> System Power Control	Rev 0.1
Friday, September 21, 2007	Scale	Model K110	Sheet 27 of 29	

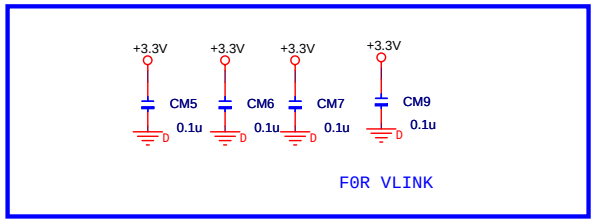

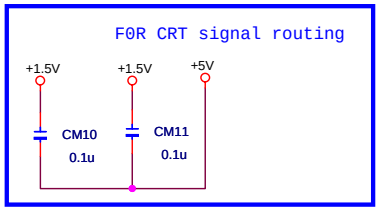

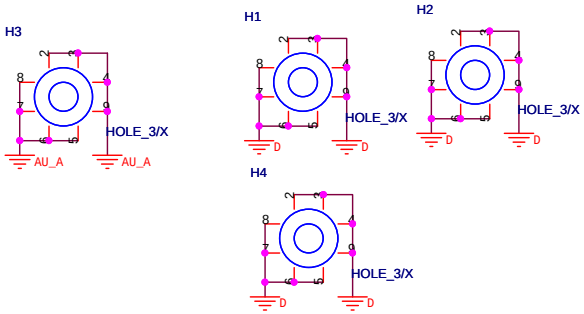

DEL:CM3,FB57,CM4,R385,R431,R387,BC4,Q33,CE7,R440---07-06-06

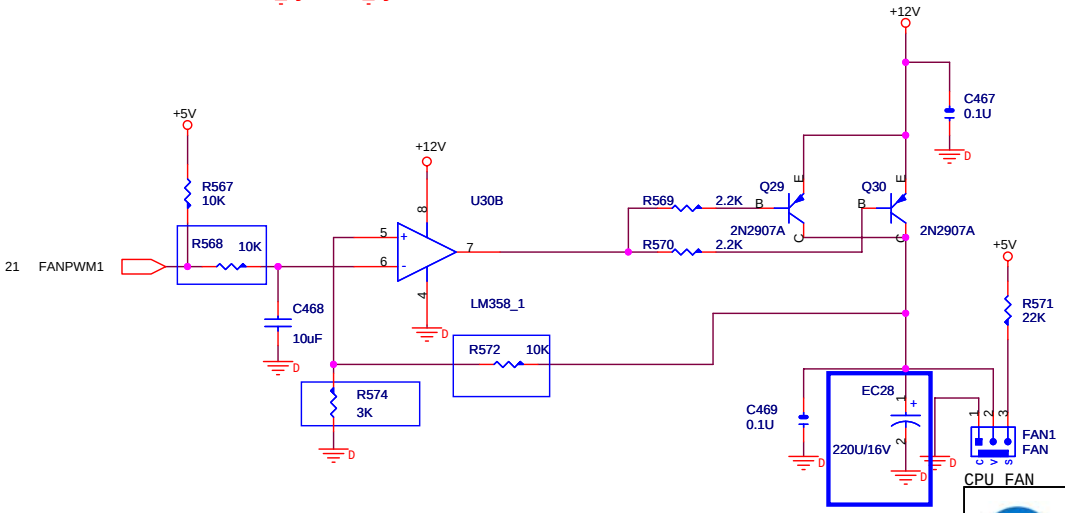

HASEE 神舟	HASEE TECHNOLOGY INC.,			
	<Title>			
Draw by	Size B	CAGE Code K110	DWG NO <Doc>	Rev 0.1
Friday, September 21, 2007	Scale	Model K110	Sheet 28 of 29	

DEL:R607,R604,C491,C492,R609,R603,R605,R606,CN2----07-06-12

HASEE 神舟	HASEE TECHNOLOGY INC.,			
	<Title>			
Draw by	Size C	CAGE Code K110	DWG NO <Doc>	Rev 0.1
Tuesday, December 04, 2007	Scale	Model K110	Sheet 29 of 29	