A3 BLOCK DIAGRAM

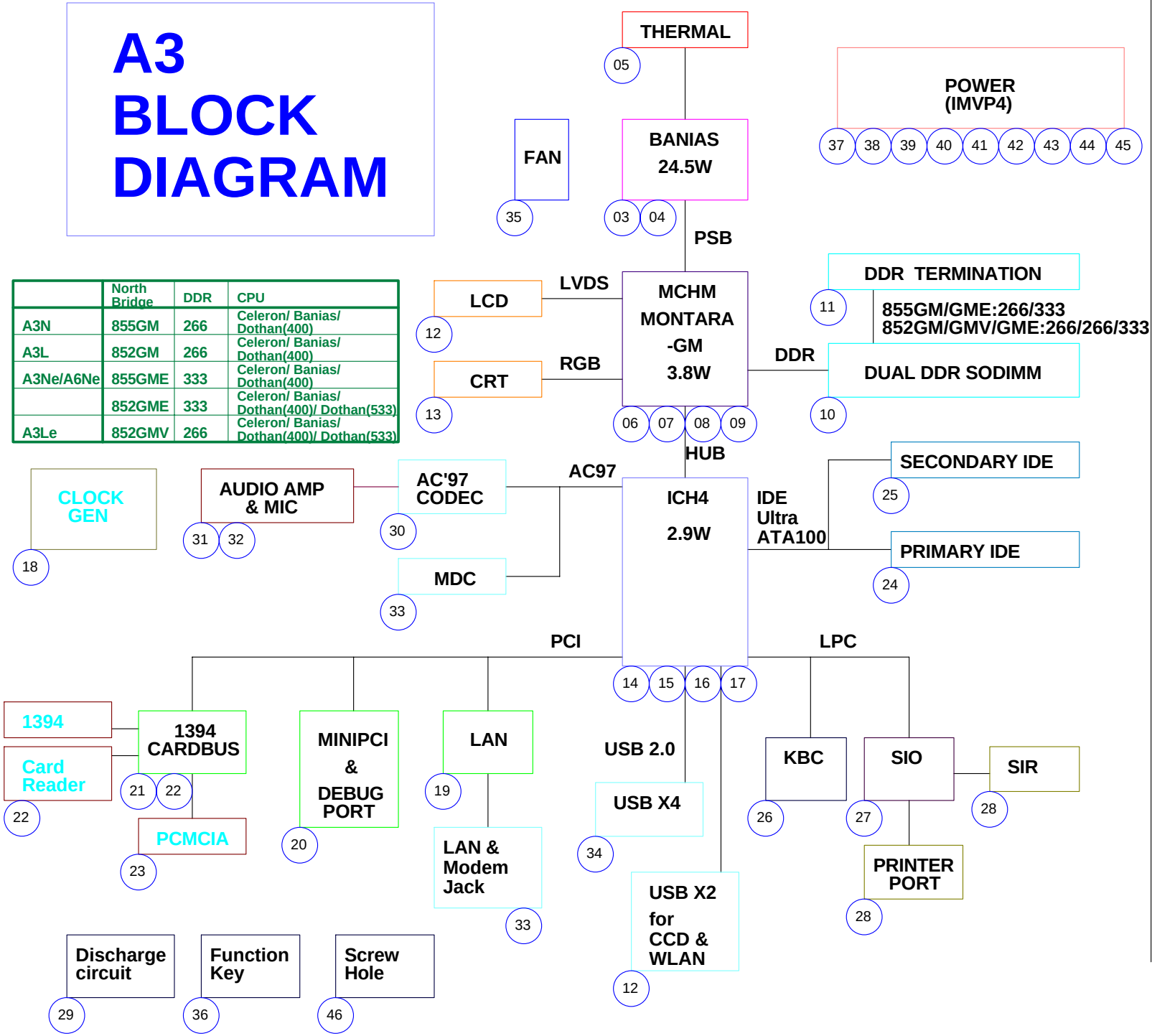

	North Bridge	DDR	CPU
A3N	855GM	266	Celeron/ Banias/ Dothan(400)
A3L	852GM	266	Celeron/ Banias/ Dothan(400)
A3Ne/A6Ne	855GME	333	Celeron/ Banias/ Dothan(400)
	852GME	333	Celeron/ Banias/ Dothan(400)/ Dothan(533)
A3Le	852GMV	266	Celeron/ Banias/ Dothan(400)/ Dothan(533)

FILE LIST

01

01_BLOCK DIAGRAM
02_POWER DIAGRAM
03_CPU-BANIAS(HOST)
04_CPU-BANIAS(PWR)
05_THERMAL
06_NB-MCHM(DDR)
07_NB-MCHM(HOST)
08_NB-MCHM(VGA)
09_NB-MCHM(PWR)
10_DUAL DDR SODIMM
11_DDR TERMINATION
12_LVDS & BACKLIGHT
13_CRT CONNECTOR
14_ICH4-M(HUB_PCI)
15_ICH4-M(H_U_IDE_PM)
16_ICH4-M(PWR)
17_ICH4-M_PULLUP
18_CLOCK-ICS950815
19_LAN-RTL8100CL
20_MINIPCI
21_CB1394-R5C593(1)
22_CB1394-R5C593(2)
23_PCMCIA SOCKET
24_IDE-HD
25_IDE-ODD
26_KBC-M38857
27_SIO-ITE7805
28_IR&LPT_PORT
29_DISCHARGE CIRCUIT
30_CODEC-ALC650
31_AUDIO AMP
32_MIC
33_MDC&RJ45&RJ11
34_USB
35_FAN&Audio DJ
36_FUNCTION KEY
37_PWR & RESET SEQ
38_VCORE
39_1.25V&1.8V
40_2.5V&1.5V&1.35V&1.05V
41_SYSTEM
42_LOAD SWITCH
43_CHARGER
44_PIC16C54
45_BATLOW/SD#
46_SCREW HOLE & M/B SETTING
47_REVISION(1)
48_REVISION(2)
49_REVISION(3)
50_REVISION(4)
51_BLOCK DIAGRAM 5E
52_BLOCK DIAGRAM 7H
53_Part Reference 1
54_Part Reference 2
55_Power Net Reference

BLOCK DIAGRAM

System work voltage
Adapter in : 19.5 ~18.5 V
Battery in : 16.8 ~ 11.6V

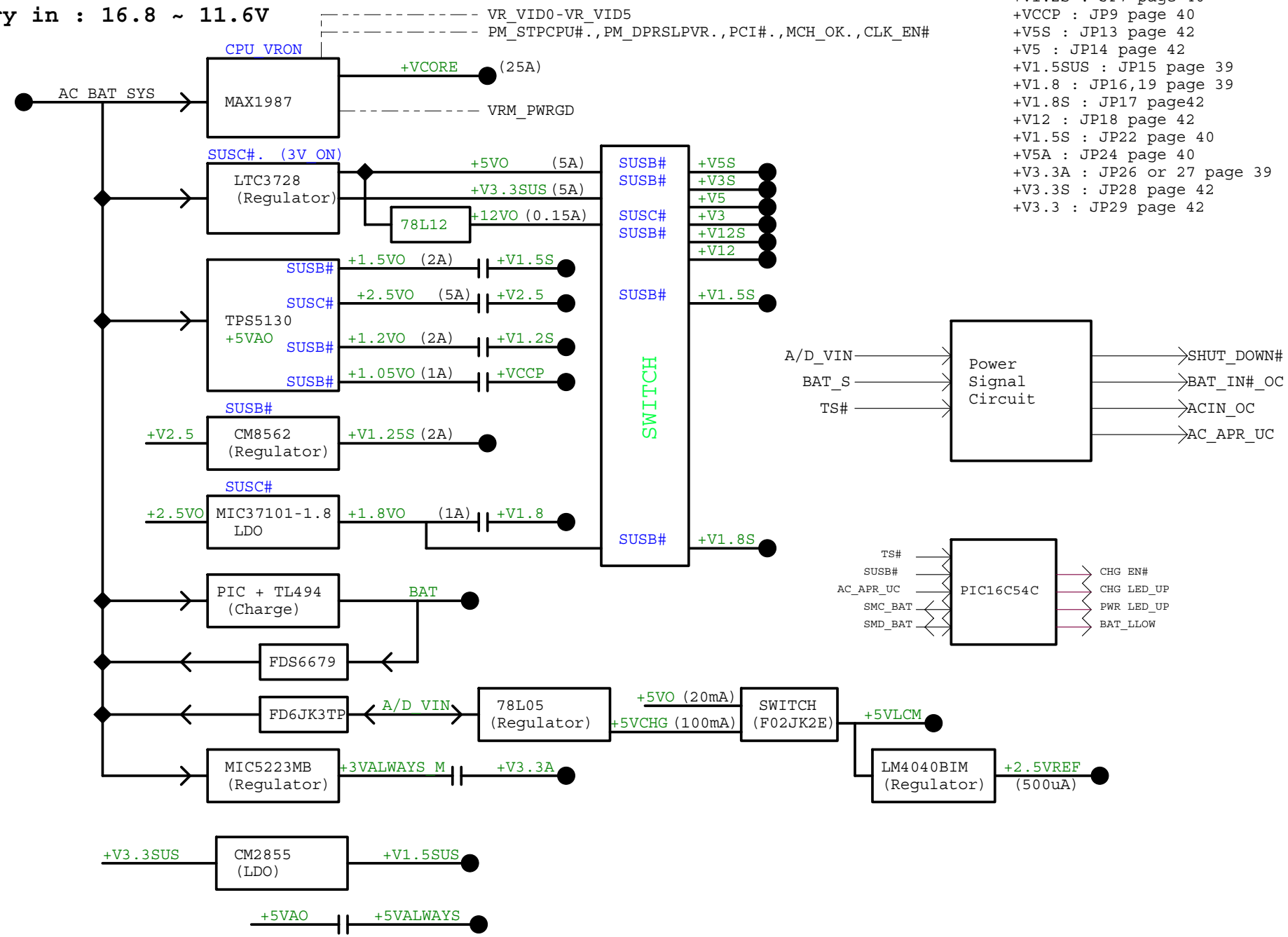

+V1.25S : JP4,5 page 39
+V2.5 : JP6 page 40
+V1.2S : JP7 page 40
+VCCP : JP9 page 40
+V5S : JP13 page 42
+V5 : JP14 page 42
+V1.5SUS : JP15 page 39
+V1.8 : JP16,19 page 39
+V1.8S : JP17 page42
+V12 : JP18 page 42
+V1.5S : JP22 page 40
+V5A : JP24 page 40
+V3.3A : JP26 or 27 page 39
+V3.3S : JP28 page 42
+V3.3 : JP29 page 42

POWER DIAGRAM

CPU Pin A1 need to be enlarged(M)

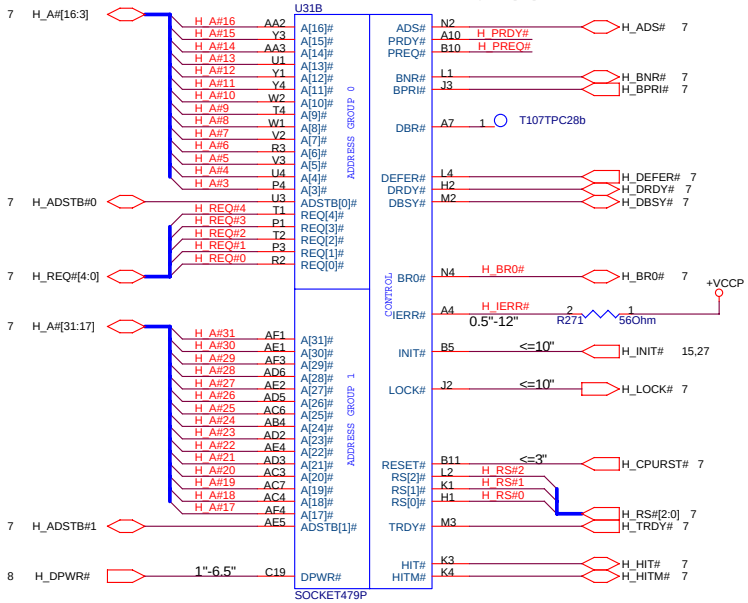

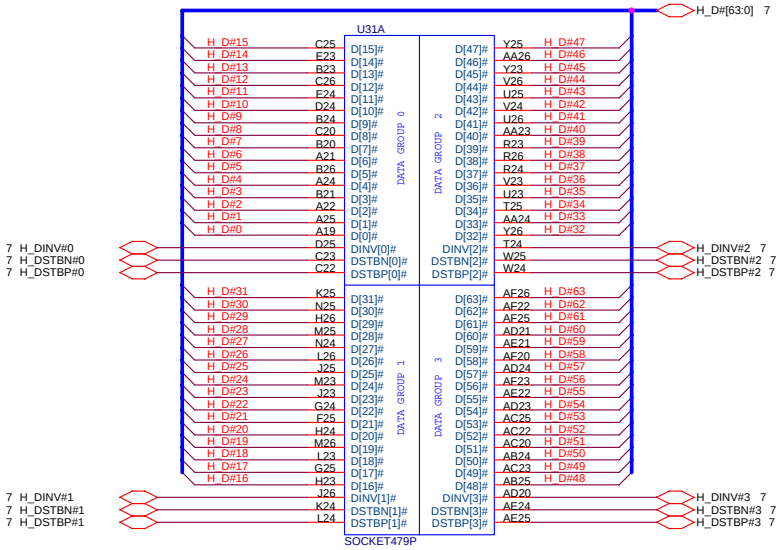

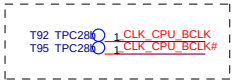

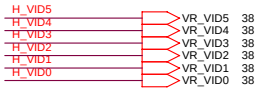

CPU PLL CIRCUITS

1.71V - 1.89V(+/- 5%)
S0-S1M: 0.3A

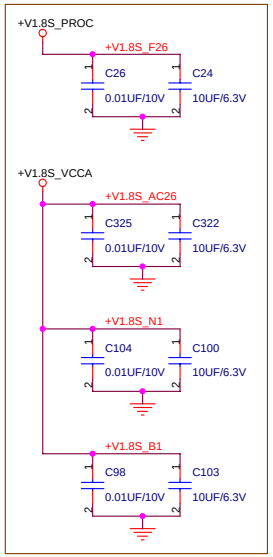

2025 2308

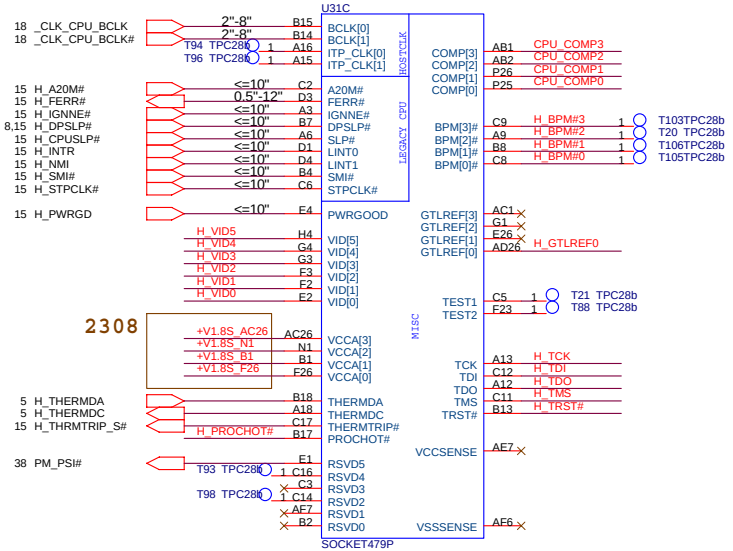

	Celeron	Banias	Dothan (400)	Dothan (533)
Frequency	100	100	100	133
VCCA[1:3]	1.8V	1.8V	1.8V	NC
VCCA[0]	1.8V	1.8V	1.8V	1.5V
U54 switch to	Pin 3,4			Pin 1,2

TOPOLOGY 2A:
R-CPU-ICH Y-FORK
CPU-ICH: 0.5" - 12"
R - CPU <= 3"
(#0013)

TOPOLOGY 1B:
CPU-ICH-R
CPU-ICH: 0.5" - 12"
ICH-R <= 3"
(#0013)

TOPOLOGY 2B:
MCH-CPU-ICH4
MCH-CPU:0.5"-6.5"
CPU-ICH4:0.5"-12"
(#0013)

H_DPSLP#

TOPOLOGY 1C:
CPU-R-LSC-ICH
CPU-R: 0.5" - 12"
R - LSC<= 3"
LSC-ICH:0.5"-12"

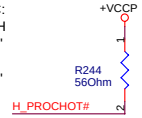

H_GTLREF0
LENGTH <=0.5"
WIDTH = 5 mils
SPACE >= 25 mils
X BPSB(#0004)

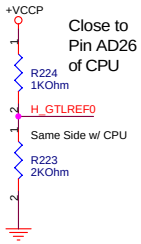

TOPOLOGY 3:
CPU-ICH-R-LSC-FWH
CPU-ICH:0.5" - 12"
R - LSC <= 3"
LSC-FWH:0.5"-6"(#0013)

H_INIT#

TOPOLOGY 1B:
CPU-ICH-R
CPU-ICH: 0.5" - 12"
ICH-R <= 3"
(#0013)

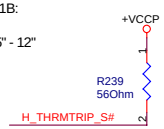

CPU_COMP2 :
Length <= 0.5"
Width = 20 mils(L1/L4)
Space>= 25 mils
X BPSB(#0001)

CPU_COMP0 :
Length <= 0.5"
Width = 20 mils(L1/L4)
Space>= 25 mils
X BPSB(#0001)

CPU DEBUG PORT

Close to Pin A8 of CPU

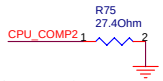

Pin AD1,AC2 of BANIAS

CPU_COMP3 :
Length <= 0.5"
Width = 5 mils
Space>= 25 mils
X BPSB(#0001)

CPU_COMP1 :
Length <= 0.5"
Width = 5 mils
Space>= 25 mils
X BPSB(#0001)

Close to Pin A12 of CPU
Width= 5 mils
Length <= 2"

CPU JTAG

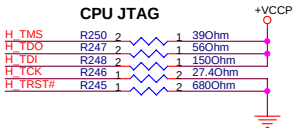

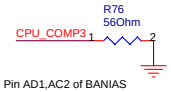

Pin AD1,AC2 of BANIAS

CPU-BANIAS(HOST)

HFM(1.3GHz-1.7GHz): 1.468V
LFM(600MHz): 0.956V

0.745V - 1.356V(+/- 1.5%)
C0: 25 A
C3: 7.59A
C4: 0.9A

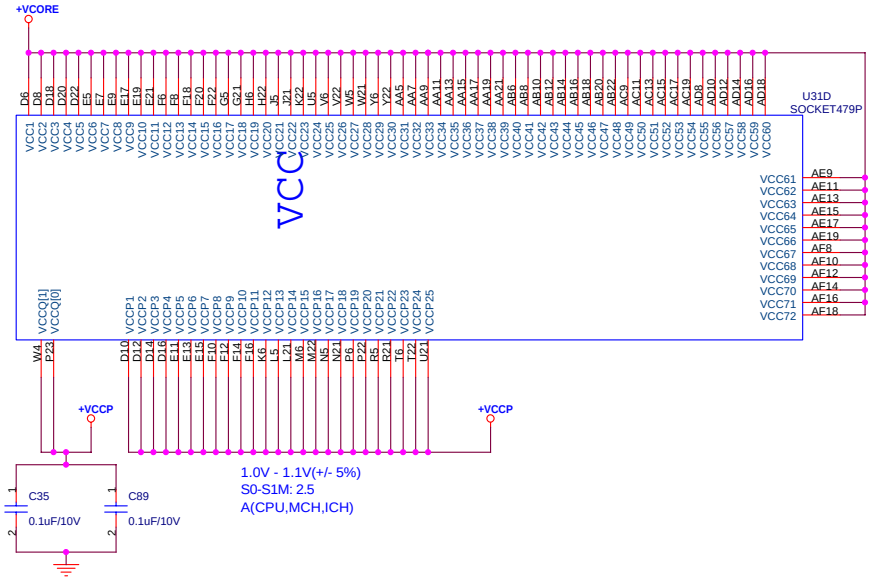

1.0V - 1.1V(+/- 5%)
S0-S1M: 2.5
A(CPU,MCH,ICH)

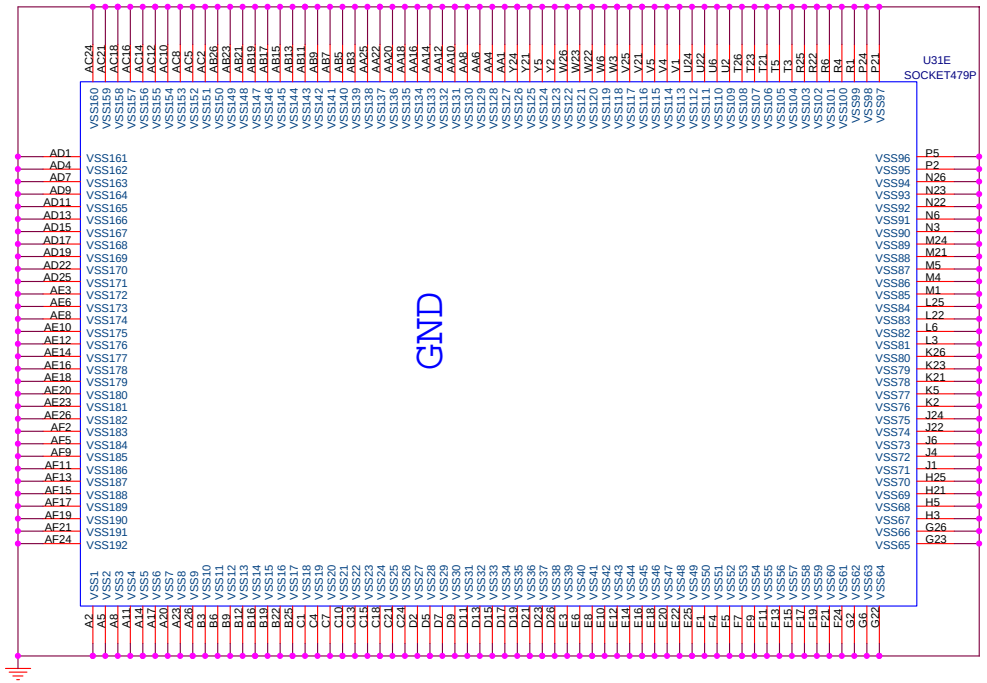

CPU VCORE Decoupling Capacitor

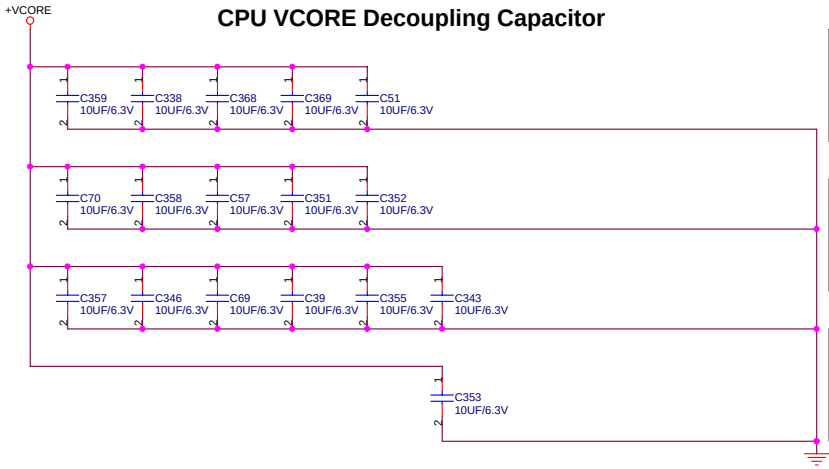

Mid Frequency Decoupling (Place around Processor)

High Frequency Decoupling (Place underneath Processor) using 10uF/6.3V X5R

+VCORE Bulk Decoupling

+VCCP (CPU) Decoupling Capacitor (Place near CPU)

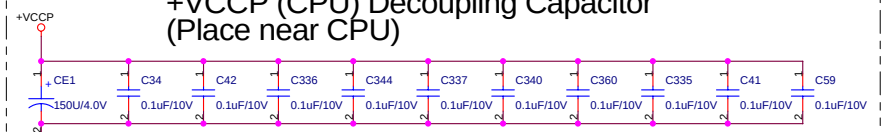

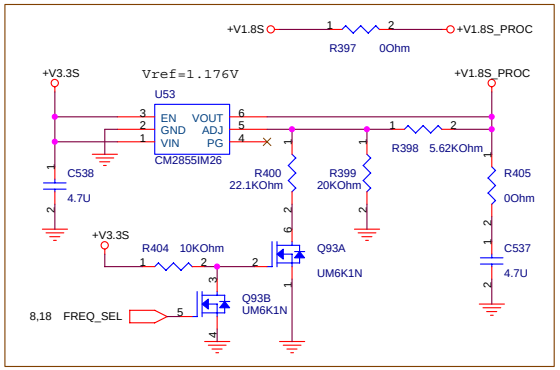

2308

For A3N/A3NE/A3L:
Load R397

For A3LE:
Load C537, C538, Q93, R398, R399, R400, R404, R405, U53

CPU-BANIAS(PWR)

Route H_THERMDA and H_THERMDC on the same layer

----------OTHER SIGNALS
12 mils
==========GND
10 mils
=========H_THERMDA(10 mils)
10 mils
=========H_THERMDC(10 mils)
10 mils
=========GND
12 mils
----------OTHER SIGNALS

Avoid BPSB,Power

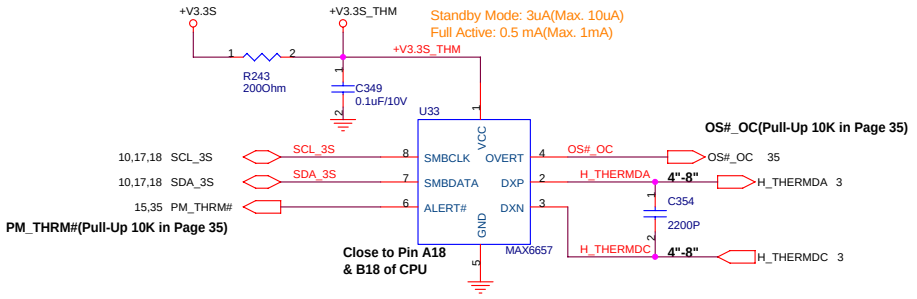

THERMAL

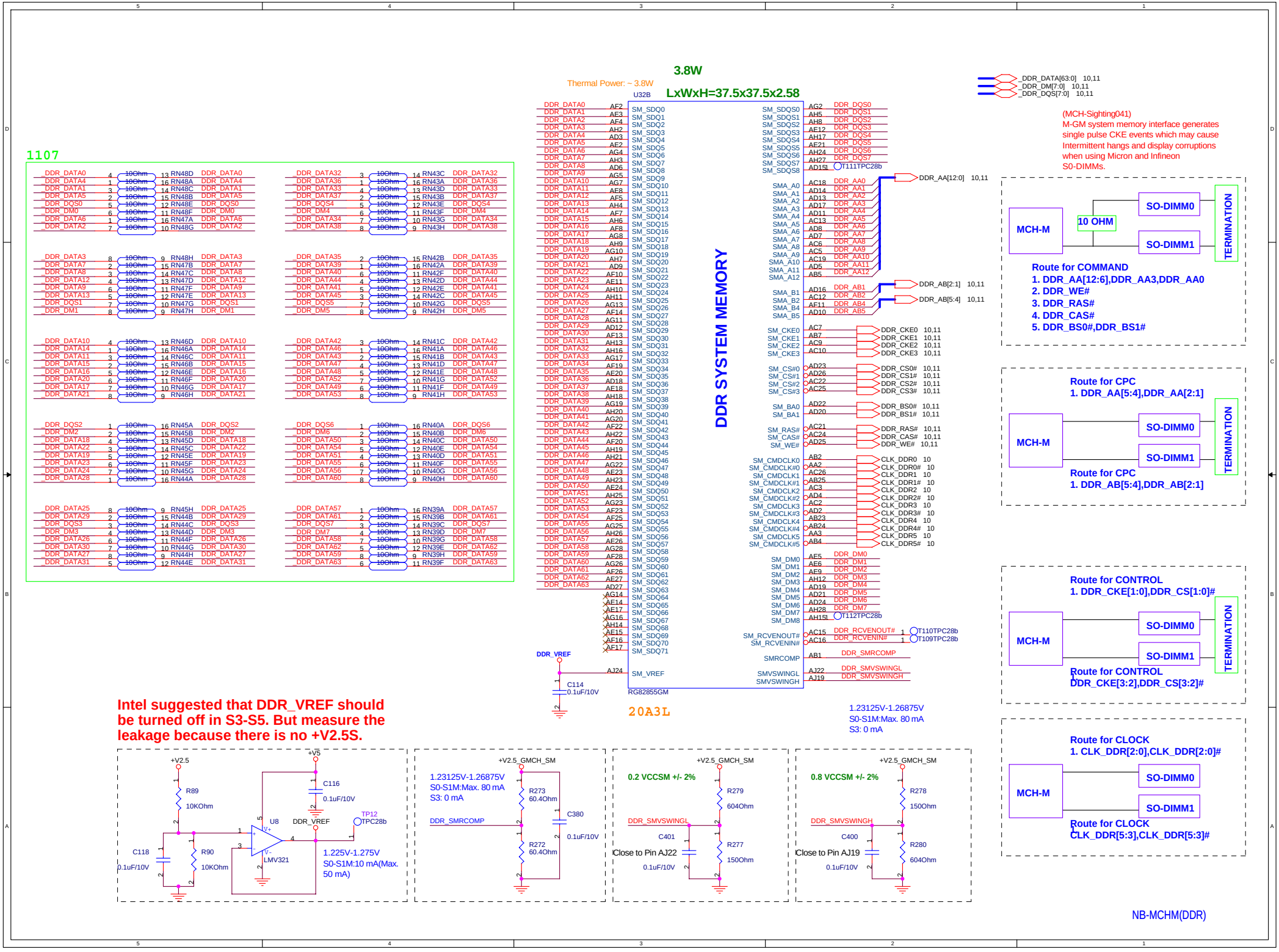
3.8W
Thermal Power: ~ 3.8W
LxWxH=37.5x37.5x2.58
U32B
DDR SYSTEM MEMORY
RG82855GM
20A3L
1107
_DDR_DATA[63:0] 10,11
_DDR_DM[7:0] 10,11
_DDR_DQS[7:0] 10,11
DDR_AA[12:0] 10,11
DDR_AB[2:1] 10,11
DDR_AB[5:4] 10,11
DDR_VREF
C114
0.1uF/10V
1.23125V-1.26875V
S0-S1M:Max. 80 mA
S3: 0 mA
(MCH-Sighting041)
M-GM system memory interface generates single pulse CKE events which may cause Intermittent hangs and display corruptions when using Micron and Infineon S0-DIMMs.
MCH-M
10 OHM
SO-DIMM0
SO-DIMM1
TERMINATION
Route for COMMAND
1. DDR_AA[12:6],DDR_AA3,DDR_AA0
2. DDR_WE#
3. DDR_RAS#
4. DDR_CAS#
5. DDR_BS0#,DDR_BS1#
Route for CPC
1. DDR_AA[5:4],DDR_AA[2:1]
Route for CPC
1. DDR_AB[5:4],DDR_AB[2:1]
Route for CONTROL
1. DDR_CKE[1:0],DDR_CS[1:0]#
Route for CONTROL
DDR_CKE[3:2],DDR_CS[3:2]#
Route for CLOCK
1. CLK_DDR[2:0],CLK_DDR[2:0]#
Route for CLOCK
CLK_DDR[5:3],CLK_DDR[5:3]#
Intel suggested that DDR_VREF should be turned off in S3-S5. But measure the leakage because there is no +V2.5S.
+V2.5
R89
10KOhm
C118
0.1uF/10V
R90
10KOhm
+V5
C116
0.1uF/10V
U8
LMV321
DDR_VREF
TP12
TPC28b
1.225V-1.275V
S0-S1M:10 mA(Max. 50 mA)
+V2.5_GMCH_SM
1.23125V-1.26875V
S0-S1M:Max. 80 mA
S3: 0 mA
DDR_SMRCOMP
R273
60.4Ohm
R272
60.4Ohm
C380
0.1uF/10V
0.2 VCCSM +/- 2%
DDR_SMVSWINGL
C401
Close to Pin AJ22
0.1uF/10V
R279
604Ohm
R277
150Ohm
0.8 VCCSM +/- 2%
DDR_SMVSWINGH
C400
Close to Pin AJ19
0.1uF/10V
R278
150Ohm
R280
604Ohm
NB-MCHM(DDR)

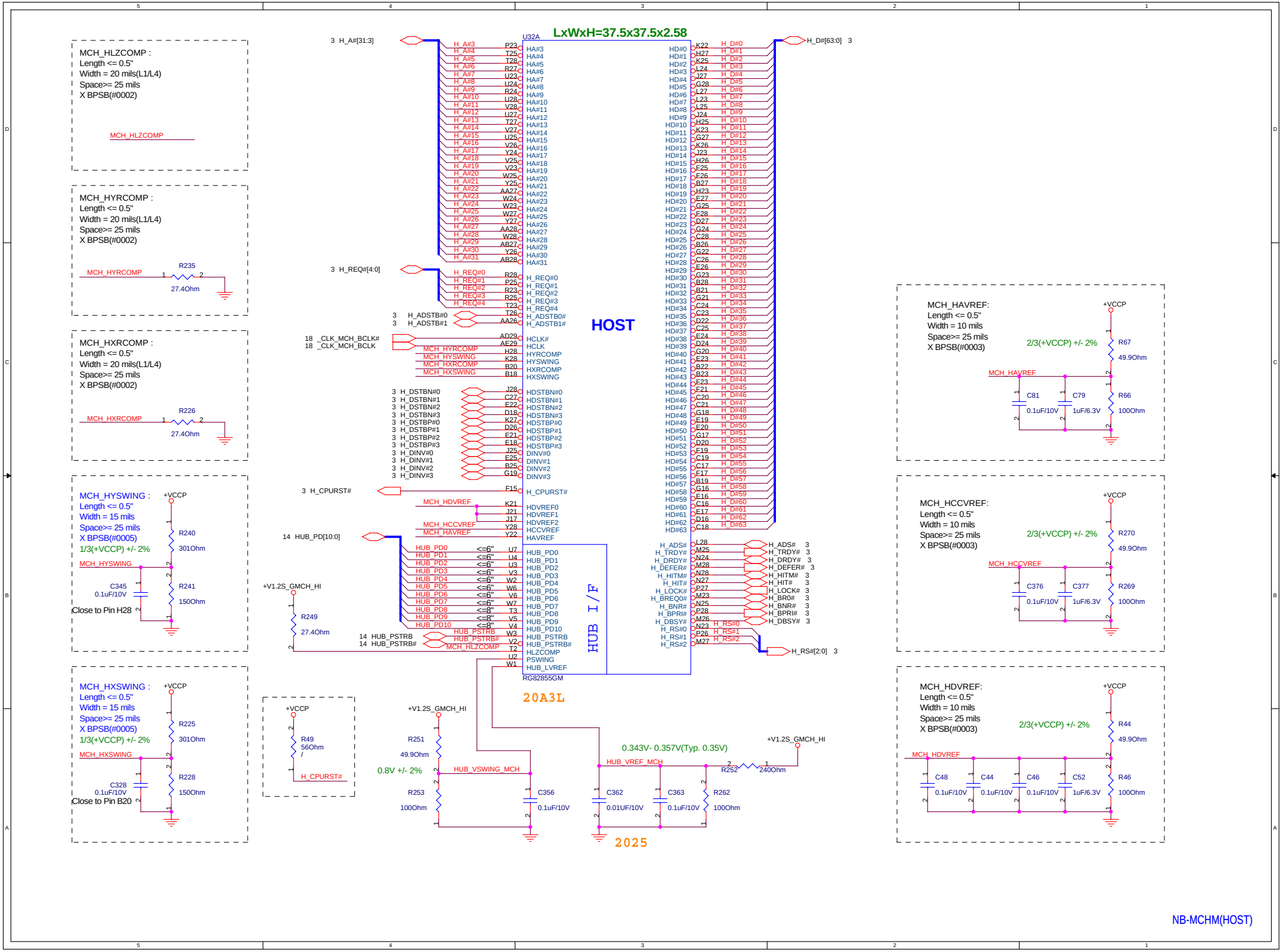
LxWxH=37.5x37.5x2.58
U32A
HOST
HUB I/F
RG82855GM
20A3L
2025
MCH_HLZCOMP :
Length <= 0.5"
Width = 20 mils(L1/L4)
Space>= 25 mils
X BPSB(#0002)
MCH_HLZCOMP
MCH_HYRCOMP :
Length <= 0.5"
Width = 20 mils(L1/L4)
Space>= 25 mils
X BPSB(#0002)
MCH_HYRCOMP
R235
27.4Ohm
MCH_HXRCOMP :
Length <= 0.5"
Width = 20 mils(L1/L4)
Space>= 25 mils
X BPSB(#0002)
MCH_HXRCOMP
R226
27.4Ohm
MCH_HYSWING :
Length <= 0.5"
Width = 15 mils
Space>= 25 mils
X BPSB(#0005)
1/3(+VCCP) +/- 2%
+VCCP
R240
301Ohm
MCH_HYSWING
C345
0.1uF/10V
R241
150Ohm
Close to Pin H28
MCH_HXSWING :
Length <= 0.5"
Width = 15 mils
Space>= 25 mils
X BPSB(#0005)
1/3(+VCCP) +/- 2%
+VCCP
R225
301Ohm
MCH_HXSWING
C328
0.1uF/10V
R228
150Ohm
Close to Pin B20
3 H_A#[31:3]
3 H_REQ#[4:0]
3 H_ADSTB#0
3 H_ADSTB#1
18 _CLK_MCH_BCLK#
18 _CLK_MCH_BCLK
MCH_HYRCOMP
MCH_HYSWING
MCH_HXRCOMP
MCH_HXSWING
3 H_DSTBN#0
3 H_DSTBN#1
3 H_DSTBN#2
3 H_DSTBN#3
3 H_DSTBP#0
3 H_DSTBP#1
3 H_DSTBP#2
3 H_DSTBP#3
3 H_DINV#0
3 H_DINV#1
3 H_DINV#2
3 H_DINV#3
3 H_CPURST#
MCH_HDVREF
MCH_HCCVREF
MCH_HAVREF
14 HUB_PD[10:0]
+V1.2S_GMCH_HI
R249
27.4Ohm
14 HUB_PSTRB
14 HUB_PSTRB#
MCH_HLZCOMP
H_D#[63:0] 3
H_ADS# 3
H_TRDY# 3
H_DRDY# 3
H_DEFER# 3
H_HITM# 3
H_HIT# 3
H_LOCK# 3
H_BR0# 3
H_BNR# 3
H_BPRI# 3
H_DBSY# 3
H_RS#[2:0] 3
+VCCP
R49
56Ohm
/
H_CPURST#
+V1.2S_GMCH_HI
R251
49.9Ohm
0.8V +/- 2%
HUB_VSWING_MCH
R253
100Ohm
C356
0.1uF/10V
0.343V- 0.357V(Typ. 0.35V)
HUB_VREF_MCH
C362
0.01UF/10V
C363
0.1uF/10V
R262
100Ohm
R252
240Ohm
+V1.2S_GMCH_HI
MCH_HAVREF:
Length <= 0.5"
Width = 10 mils
Space>= 25 mils
X BPSB(#0003)
2/3(+VCCP) +/- 2%
+VCCP
R67
49.9Ohm
MCH_HAVREF
C81
0.1uF/10V
C79
1uF/6.3V
R66
100Ohm
MCH_HCCVREF:
Length <= 0.5"
Width = 10 mils
Space>= 25 mils
X BPSB(#0003)
2/3(+VCCP) +/- 2%
+VCCP
R270
49.9Ohm
MCH_HCCVREF
C376
0.1uF/10V
C377
1uF/6.3V
R269
100Ohm
MCH_HDVREF:
Length <= 0.5"
Width = 10 mils
Space>= 25 mils
X BPSB(#0003)
2/3(+VCCP) +/- 2%
+VCCP
R44
49.9Ohm
MCH_HDVREF
C48
0.1uF/10V
C44
0.1uF/10V
C46
0.1uF/10V
C52
1uF/6.3V
R46
100Ohm
NB-MCHM(HOST)

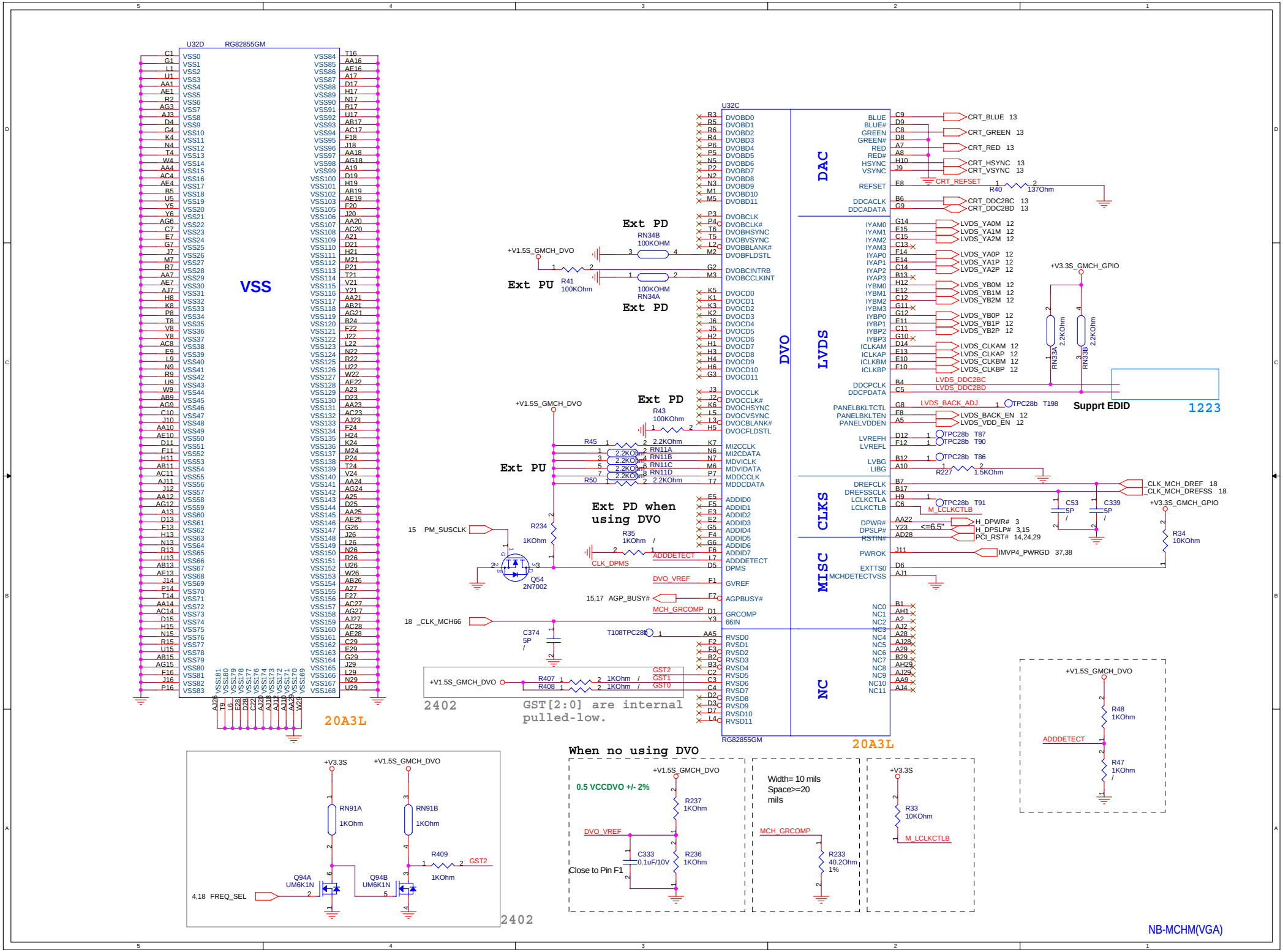
U32D RG82855GM
VSS
20A3L
U32C
DVO
DAC
LVDS
CLKS
MISC
NC
RG82855GM
20A3L
Ext PD
Ext PU
Ext PD when using DVO
+V1.5S_GMCH_DVO
RN34B 100KOHM
RN34A 100KOHM
R41 100KOhm
R43 100KOhm
R45 2.2KOhm
R50 2.2KOhm
RN11A 2.2KOhm
RN11B 2.2KOhm
RN11C 2.2KOhm
RN11D 2.2KOhm
R234 1KOhm
R35 1KOhm
Q54 2N7002
15 PM_SUSCLK
CLK_DPMS
ADDDETECT
DVO_VREF
15,17 AGP_BUSY#
MCH_GRCOMP
18 _CLK_MCH66
C374 5P
T108TPC28b
R407 1KOhm
R408 1KOhm
GST2
GST1
GST0
2402
GST[2:0] are internal pulled-low.
CRT_BLUE 13
CRT_GREEN 13
CRT_RED 13
CRT_HSYNC 13
CRT_VSYNC 13
CRT_REFSET
R40 137Ohm
CRT_DDC2BC 13
CRT_DDC2BD 13
LVDS_YA0M 12
LVDS_YA1M 12
LVDS_YA2M 12
LVDS_YA0P 12
LVDS_YA1P 12
LVDS_YA2P 12
LVDS_YB0M 12
LVDS_YB1M 12
LVDS_YB2M 12
LVDS_YB0P 12
LVDS_YB1P 12
LVDS_YB2P 12
LVDS_CLKAM 12
LVDS_CLKAP 12
LVDS_CLKBM 12
LVDS_CLKBP 12
+V3.3S_GMCH_GPIO
RN33A 2.2KOhm
RN33B 2.2KOhm
LVDS_DDC2BC
LVDS_DDC2BD
Supprt EDID
1223
LVDS_BACK_ADJ
TPC28b T198
LVDS_BACK_EN 12
LVDS_VDD_EN 12
TPC28b T87
TPC28b T90
TPC28b T86
R227 1.5KOhm
CLK_MCH_DREF 18
CLK_MCH_DREFSS 18
TPC28b T91
M_LCLKCTLB
C53 5P
C339 5P
H_DPWR# 3
H_DPSLP# 3,15
PCI_RST# 14,24,29
IMVP4_PWRGD 37,38
R34 10KOhm
+V3.3S
RN91A 1KOhm
RN91B 1KOhm
R409 1KOhm
Q94A UM6K1N
Q94B UM6K1N
4,18 FREQ_SEL
When no using DVO
0.5 VCCDVO +/- 2%
R237 1KOhm
R236 1KOhm
C333 0.1uF/10V
Close to Pin F1
Width= 10 mils
Space>=20 mils
R233 40.2Ohm 1%
R33 10KOhm
R48 1KOhm
R47 1KOhm
NB-MCHM(VGA)

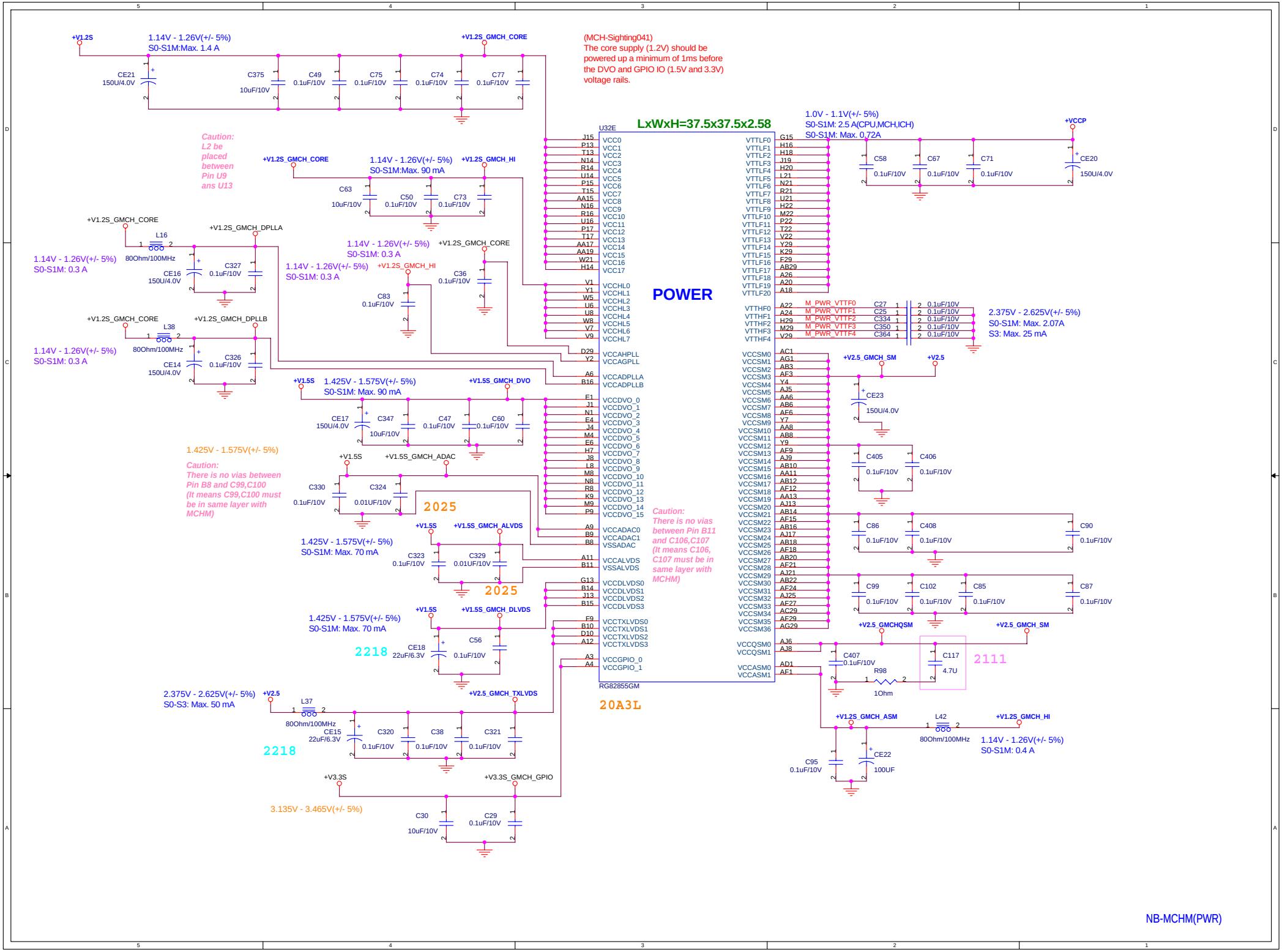
+V1.2S
1.14V - 1.26V(+/- 5%)
S0-S1M:Max. 1.4 A
+V1.2S_GMCH_CORE
CE21 150U/4.0V
C375 10uF/10V
C49 0.1uF/10V
C75 0.1uF/10V
C74 0.1uF/10V
C77 0.1uF/10V
(MCH-Sighting041)
The core supply (1.2V) should be powered up a minimum of 1ms before the DVO and GPIO IO (1.5V and 3.3V) voltage rails.
LxWxH=37.5x37.5x2.58
U32E
POWER
RG82855GM
20A3L
1.0V - 1.1V(+/- 5%)
S0-S1M: 2.5 A(CPU,MCH,ICH)
S0-S1M: Max. 0.72A
+VCCP
C58 0.1uF/10V
C67 0.1uF/10V
C71 0.1uF/10V
CE20 150U/4.0V
Caution:
L2 be placed between Pin U9 ans U13
+V1.2S_GMCH_CORE
1.14V - 1.26V(+/- 5%)
S0-S1M:Max. 90 mA
+V1.2S_GMCH_HI
C63 10uF/10V
C50 0.1uF/10V
C73 0.1uF/10V
+V1.2S_GMCH_CORE
+V1.2S_GMCH_DPLLA
L16
80Ohm/100MHz
1.14V - 1.26V(+/- 5%)
S0-S1M: 0.3 A
CE16 150U/4.0V
C327 0.1uF/10V
1.14V - 1.26V(+/- 5%)
S0-S1M: 0.3 A
+V1.2S_GMCH_HI
C83 0.1uF/10V
1.14V - 1.26V(+/- 5%)
S0-S1M: 0.3 A
+V1.2S_GMCH_CORE
C36 0.1uF/10V
+V1.2S_GMCH_CORE
+V1.2S_GMCH_DPLLB
L38
80Ohm/100MHz
1.14V - 1.26V(+/- 5%)
S0-S1M: 0.3 A
CE14 150U/4.0V
C326 0.1uF/10V
M_PWR_VTTF0 C27 0.1uF/10V
M_PWR_VTTF1 C25 0.1uF/10V
M_PWR_VTTF2 C334 0.1uF/10V
M_PWR_VTTF3 C350 0.1uF/10V
M_PWR_VTTF4 C364 0.1uF/10V
2.375V - 2.625V(+/- 5%)
S0-S1M: Max. 2.07A
S3: Max. 25 mA
+V2.5_GMCH_SM
+V2.5
CE23 150U/4.0V
+V1.5S
1.425V - 1.575V(+/- 5%)
S0-S1M: Max. 90 mA
+V1.5S_GMCH_DVO
CE17 150U/4.0V
C347 10uF/10V
C47 0.1uF/10V
C60 0.1uF/10V
1.425V - 1.575V(+/- 5%)
Caution:
There is no vias between Pin B8 and C99,C100 (It means C99,C100 must be in same layer with MCHM)
+V1.5S
+V1.5S_GMCH_ADAC
C330 0.1uF/10V
C324 0.01UF/10V
2025
C405 0.1uF/10V
C406 0.1uF/10V
+V1.5S
+V1.5S_GMCH_ALVDS
1.425V - 1.575V(+/- 5%)
S0-S1M: Max. 70 mA
C323 0.1uF/10V
C329 0.01UF/10V
2025
Caution:
There is no vias between Pin B11 and C106,C107 (It means C106, C107 must be in same layer with MCHM)
C86 0.1uF/10V
C408 0.1uF/10V
C90 0.1uF/10V
C99 0.1uF/10V
C102 0.1uF/10V
C85 0.1uF/10V
C87 0.1uF/10V
+V1.5S
+V1.5S_GMCH_DLVDS
1.425V - 1.575V(+/- 5%)
S0-S1M: Max. 70 mA
2218
CE18 22uF/6.3V
C56 0.1uF/10V
+V2.5_GMCHQSM
+V2.5_GMCH_SM
C407 0.1uF/10V
R98 1Ohm
C117 4.7U
2111
2.375V - 2.625V(+/- 5%)
S0-S3: Max. 50 mA
+V2.5
L37
80Ohm/100MHz
+V2.5_GMCH_TXLVDS
CE15 22uF/6.3V
C320 0.1uF/10V
C38 0.1uF/10V
C321 0.1uF/10V
2218
+V1.2S_GMCH_ASM
L42
80Ohm/100MHz
+V1.2S_GMCH_HI
1.14V - 1.26V(+/- 5%)
S0-S1M: 0.4 A
C95 0.1uF/10V
CE22 100UF
+V3.3S
+V3.3S_GMCH_GPIO
3.135V - 3.465V(+/- 5%)
C30 10uF/10V
C29 0.1uF/10V
NB-MCHM(PWR)

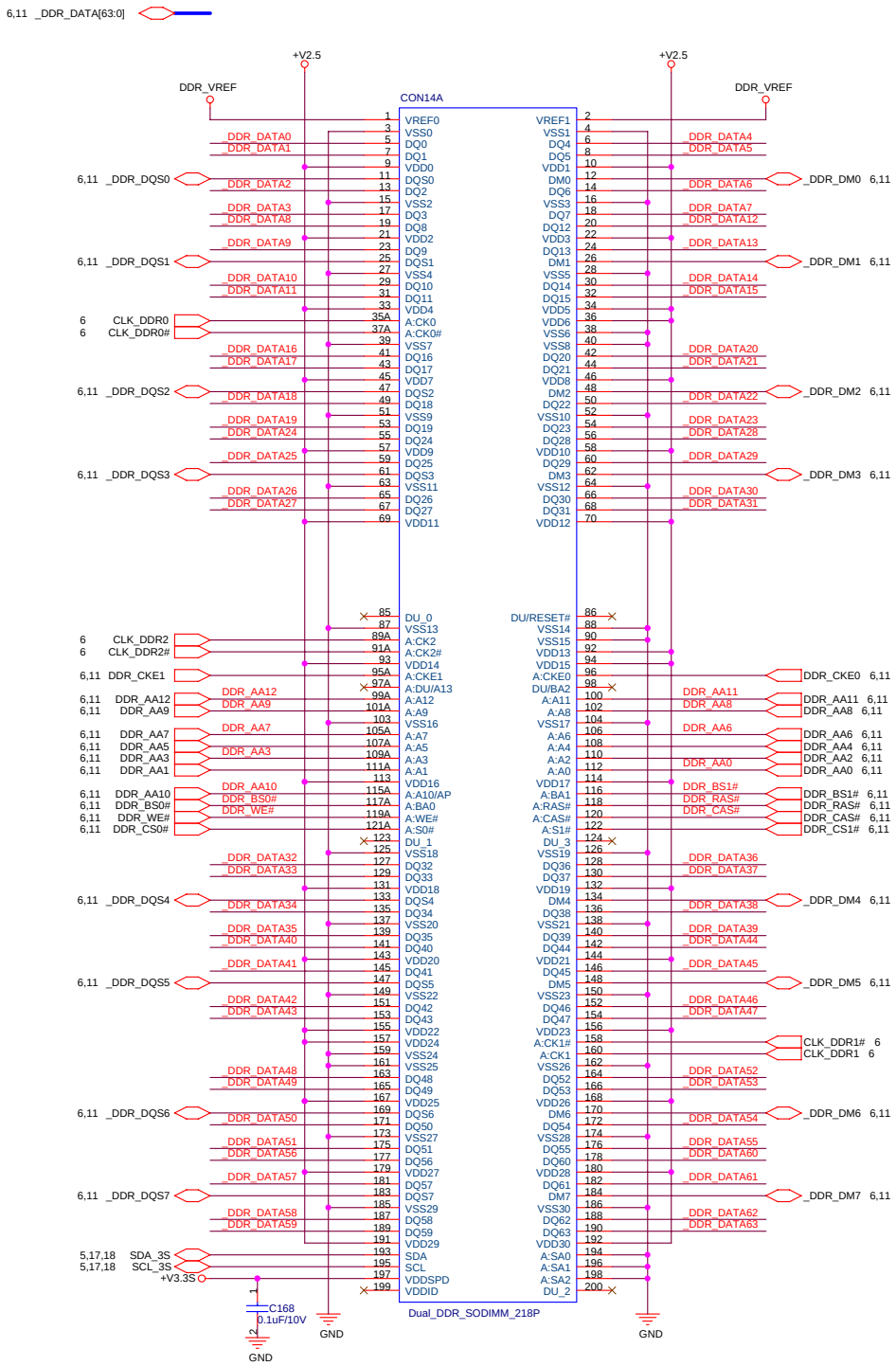

FOR +V2.5 DECOUPLING

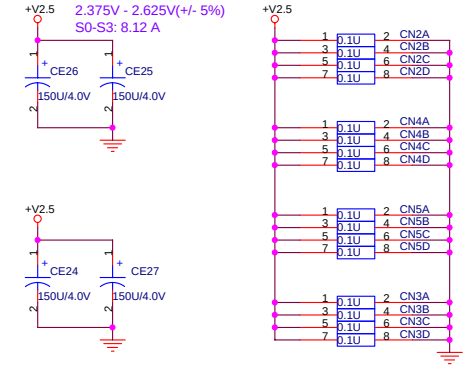

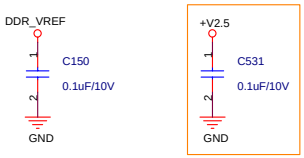

2024
EMI : Close to DDR socket power plane of +V2.5

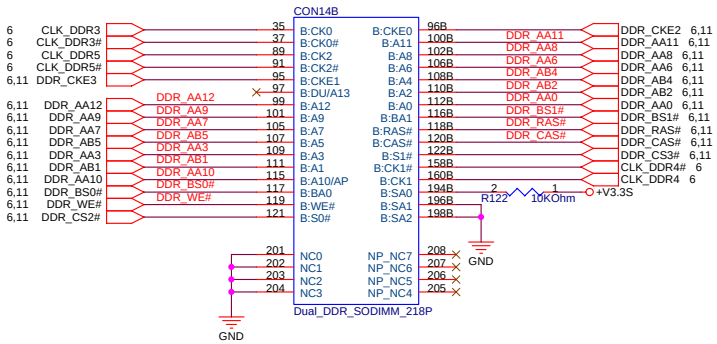

DUAL DDR SODIMM

DDR TERMINATION

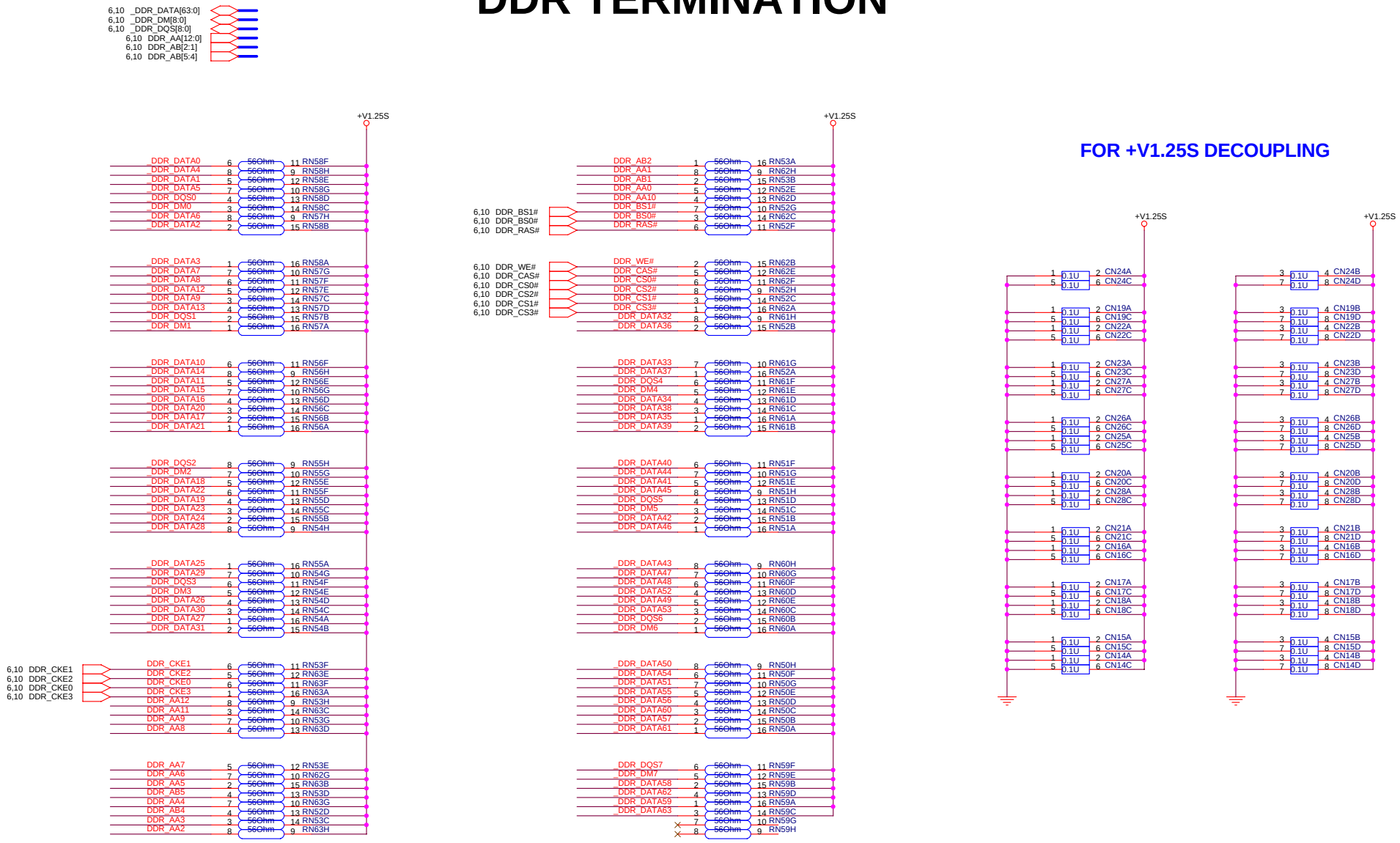

BIOS
BACK_OFF#:When user push "Fn+F7" button, BIOS active this pin to turn off back light.

BIOS
BACK_ADJ: KBC output D/A signal (adjust voltage level) to adjust Back light.

A3N use D1 R:1.0 Inverter Board

Pin 19 : Add a USB 2.0 Shielding GND cable to USB module.

USB PORT 3 for CAMERA

USB PORT 5 for WLAN

LCD	CABLE ID:	PID3	PID2	PID1	PID0
14.1	XGA	1	1	1	1
15.1	XGA	1	1	0	1
15.1	SXGA+	1	0	1	1

RN86A,B: page 20

LCD Power

SI3865: US$0.22

3-3.6V
S0-S1M:410 mA(500 mA Max.)

Caution:
Must tune R369 & C270 to meet Panel Spec

LVDS & BACKLIGHT

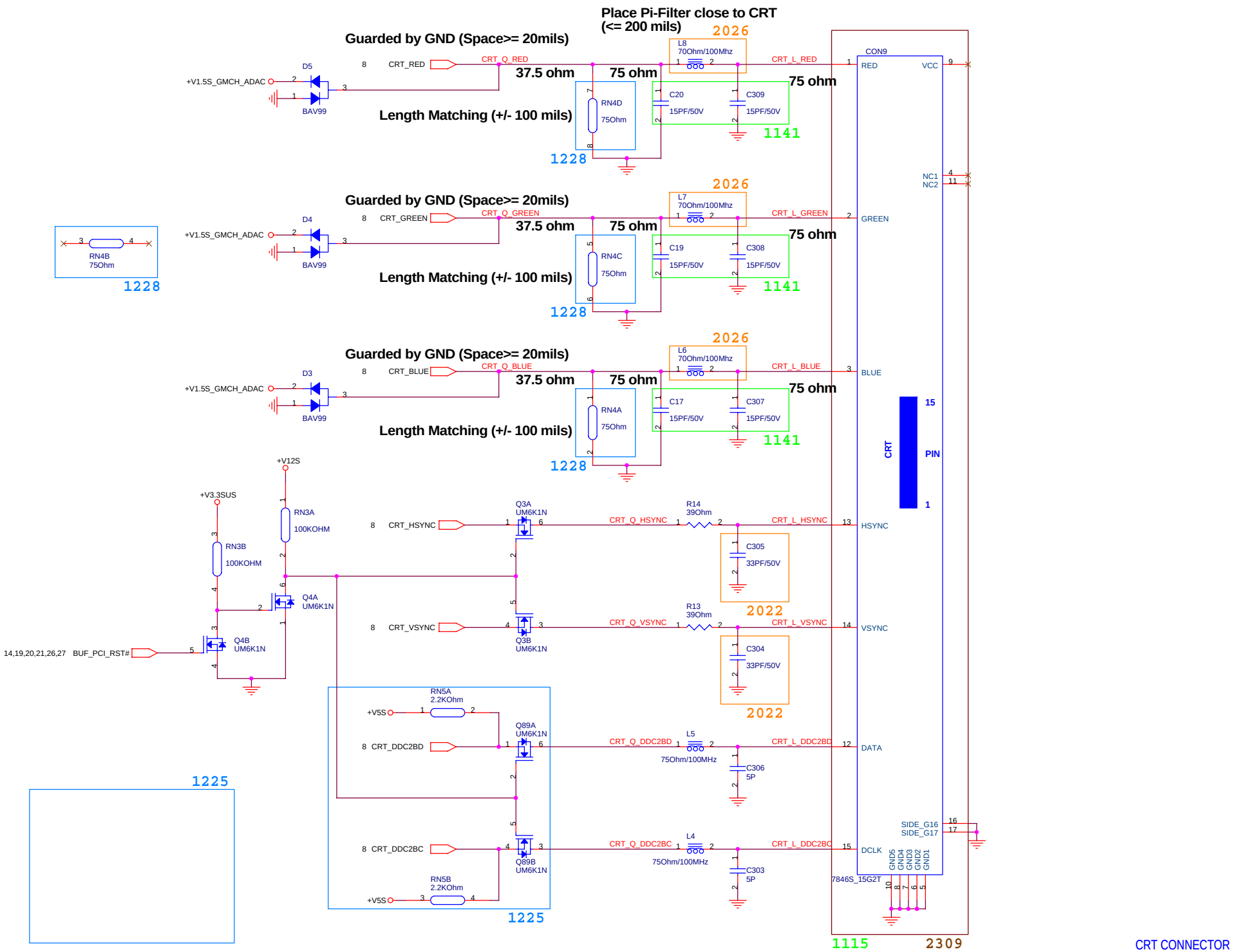

CRT CONNECTOR

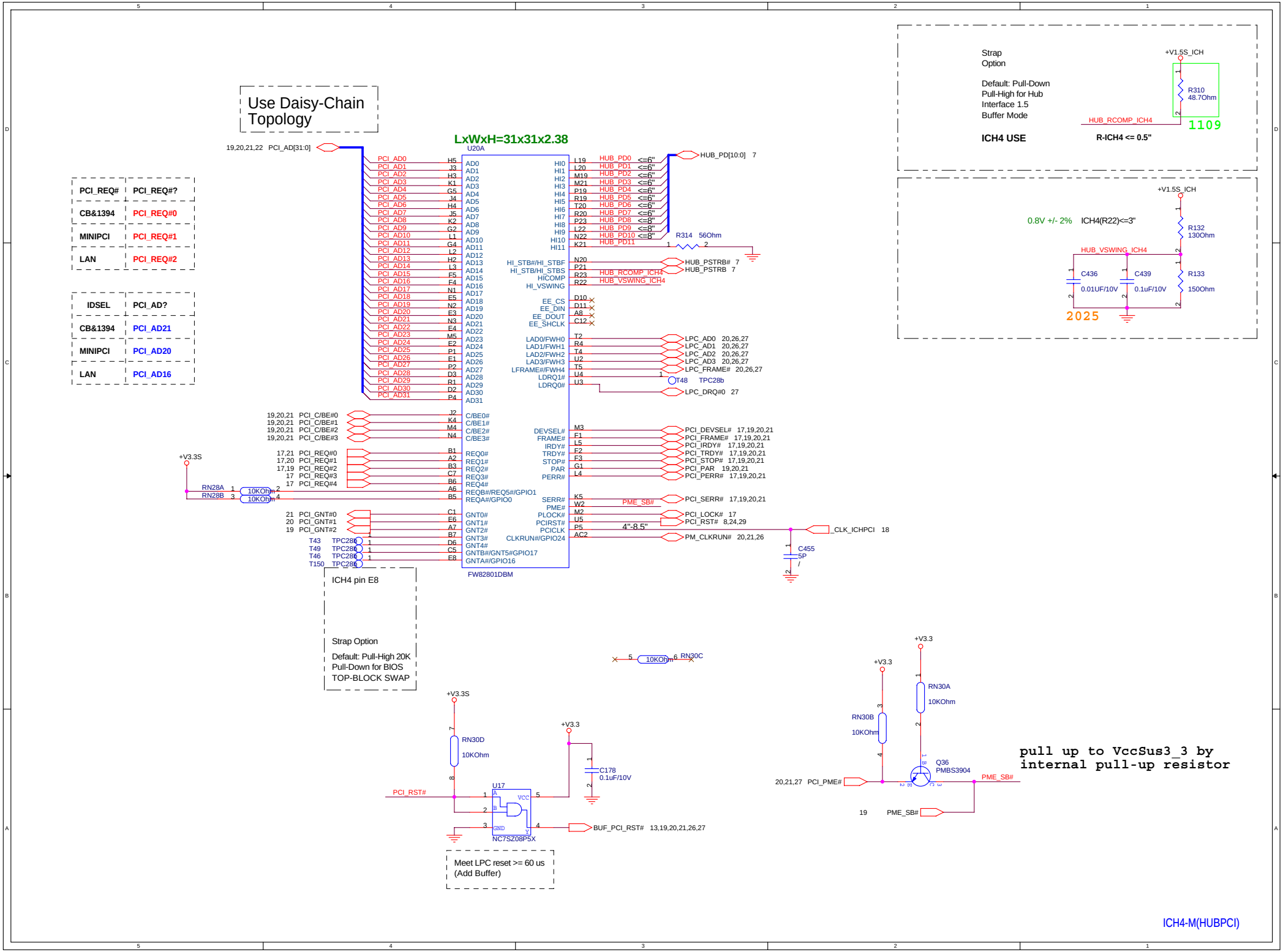
Use Daisy-Chain Topology
LxWxH=31x31x2.38
U20A
FW82801DBM
19,20,21,22 PCI_AD[31:0]
HUB_PD[10:0] 7
PCI_REQ# PCI_REQ#?
CB&1394 PCI_REQ#0
MINIPCI PCI_REQ#1
LAN PCI_REQ#2
IDSEL PCI_AD?
CB&1394 PCI_AD21
MINIPCI PCI_AD20
LAN PCI_AD16
R314 56Ohm
HUB_PSTRB# 7
HUB_PSTRB 7
HUB_RCOMP_ICH4
HUB_VSWING_ICH4
LPC_AD0 20,26,27
LPC_AD1 20,26,27
LPC_AD2 20,26,27
LPC_AD3 20,26,27
LPC_FRAME# 20,26,27
T48 TPC28b
LPC_DRQ#0 27
PCI_DEVSEL# 17,19,20,21
PCI_FRAME# 17,19,20,21
PCI_IRDY# 17,19,20,21
PCI_TRDY# 17,19,20,21
PCI_STOP# 17,19,20,21
PCI_PAR 19,20,21
PCI_PERR# 17,19,20,21
PCI_SERR# 17,19,20,21
PME_SB#
PCI_LOCK# 17
PCI_RST# 8,24,29
PM_CLKRUN# 20,21,26
CLK_ICHPCI 18
C455 5P
+V3.3S
RN28A 10KOhm
RN28B 10KOhm
ICH4 pin E8
Strap Option
Default: Pull-High 20K
Pull-Down for BIOS
TOP-BLOCK SWAP
RN30C 10KOhm
+V3.3S
RN30D 10KOhm
+V3.3
C178 0.1uF/10V
PCI_RST#
U17
NC7SZ08P5X
BUF_PCI_RST# 13,19,20,21,26,27
Meet LPC reset >= 60 us
(Add Buffer)
+V3.3
RN30A 10KOhm
RN30B 10KOhm
Q36 PMBS3904
20,21,27 PCI_PME#
PME_SB#
19 PME_SB#
pull up to VccSus3_3 by
internal pull-up resistor
Strap Option
Default: Pull-Down
Pull-High for Hub
Interface 1.5
Buffer Mode
ICH4 USE
+V1.5S_ICH
R310 48.7Ohm
HUB_RCOMP_ICH4
1109
R-ICH4 <= 0.5"
0.8V +/- 2%
ICH4(R22)<=3"
R132 130Ohm
HUB_VSWING_ICH4
C436 0.01UF/10V
C439 0.1uF/10V
R133 150Ohm
2025
ICH4-M(HUBPCI)

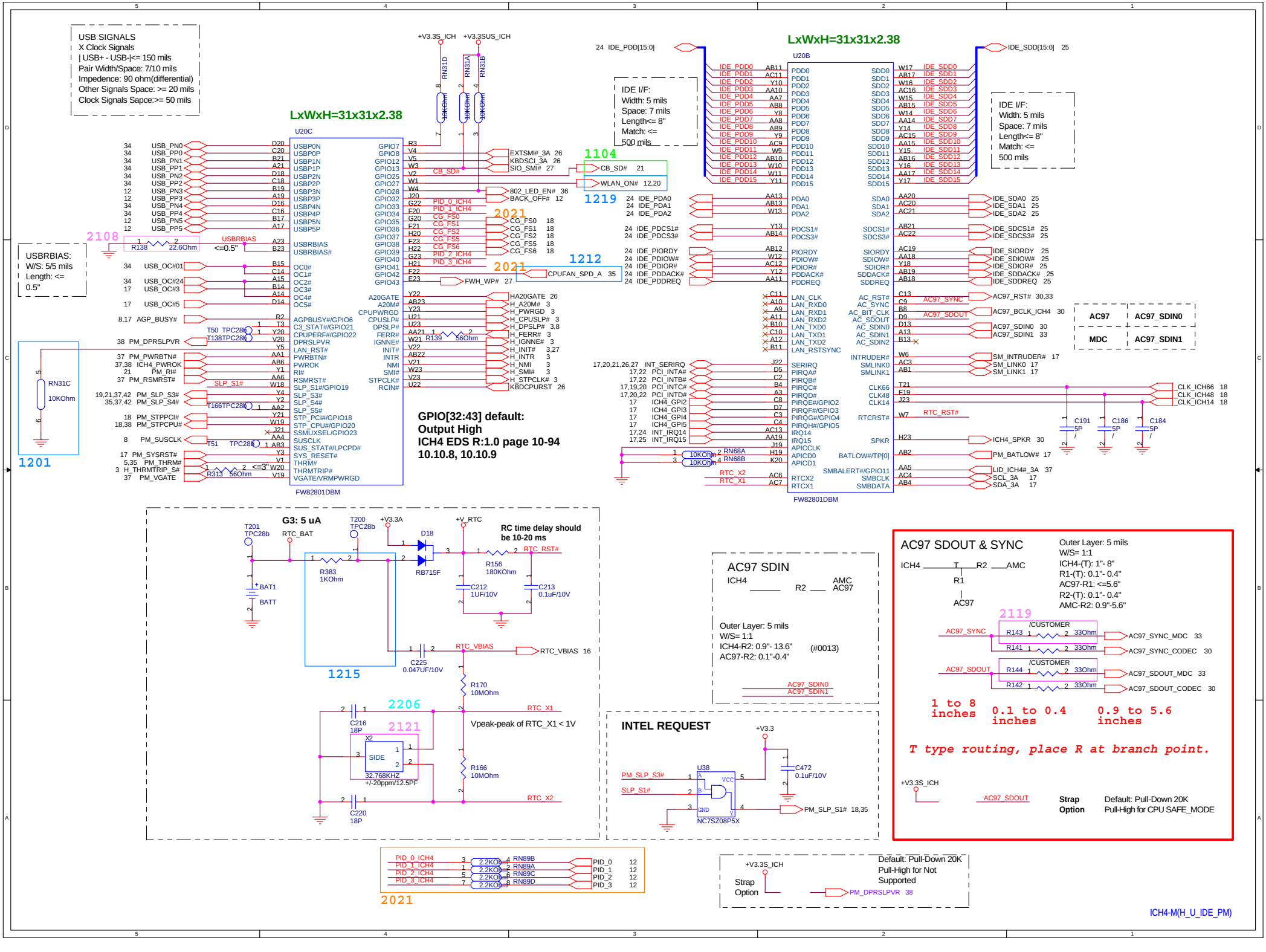
USB SIGNALS
X Clock Signals
| USB+ - USB-|<= 150 mils
Pair Width/Space: 7/10 mils
Impedence: 90 ohm(differential)
Other Signals Space: >= 20 mils
Clock Signals Sapce:>= 50 mils
LxWxH=31x31x2.38
U20C
FW82801DBM
USBRBIAS:
W/S: 5/5 mils
Length: <= 0.5"
GPIO[32:43] default:
Output High
ICH4 EDS R:1.0 page 10-94
10.10.8, 10.10.9
LxWxH=31x31x2.38
U20B
FW82801DBM
IDE I/F:
Width: 5 mils
Space: 7 mils
Length<= 8"
Match: <= 500 mils
AC97
AC97_SDIN0
MDC
AC97_SDIN1
G3: 5 uA
RC time delay should be 10-20 ms
AC97 SDIN
Outer Layer: 5 mils
W/S= 1:1
ICH4-R2: 0.9"- 13.6"
AC97-R2: 0.1"-0.4"
(#0013)
AC97 SDOUT & SYNC
Outer Layer: 5 mils
W/S= 1:1
ICH4-(T): 1"- 8"
R1-(T): 0.1"- 0.4"
AC97-R1: <=5.6"
R2-(T): 0.1"- 0.4"
AMC-R2: 0.9"-5.6"
1 to 8 inches
0.1 to 0.4 inches
0.9 to 5.6 inches
T type routing, place R at branch point.
Strap Option
Default: Pull-Down 20K
Pull-High for CPU SAFE_MODE
INTEL REQUEST
Vpeak-peak of RTC_X1 < 1V
Strap Option
Default: Pull-Down 20K
Pull-High for Not Supported
ICH4-M(H_U_IDE_PM)

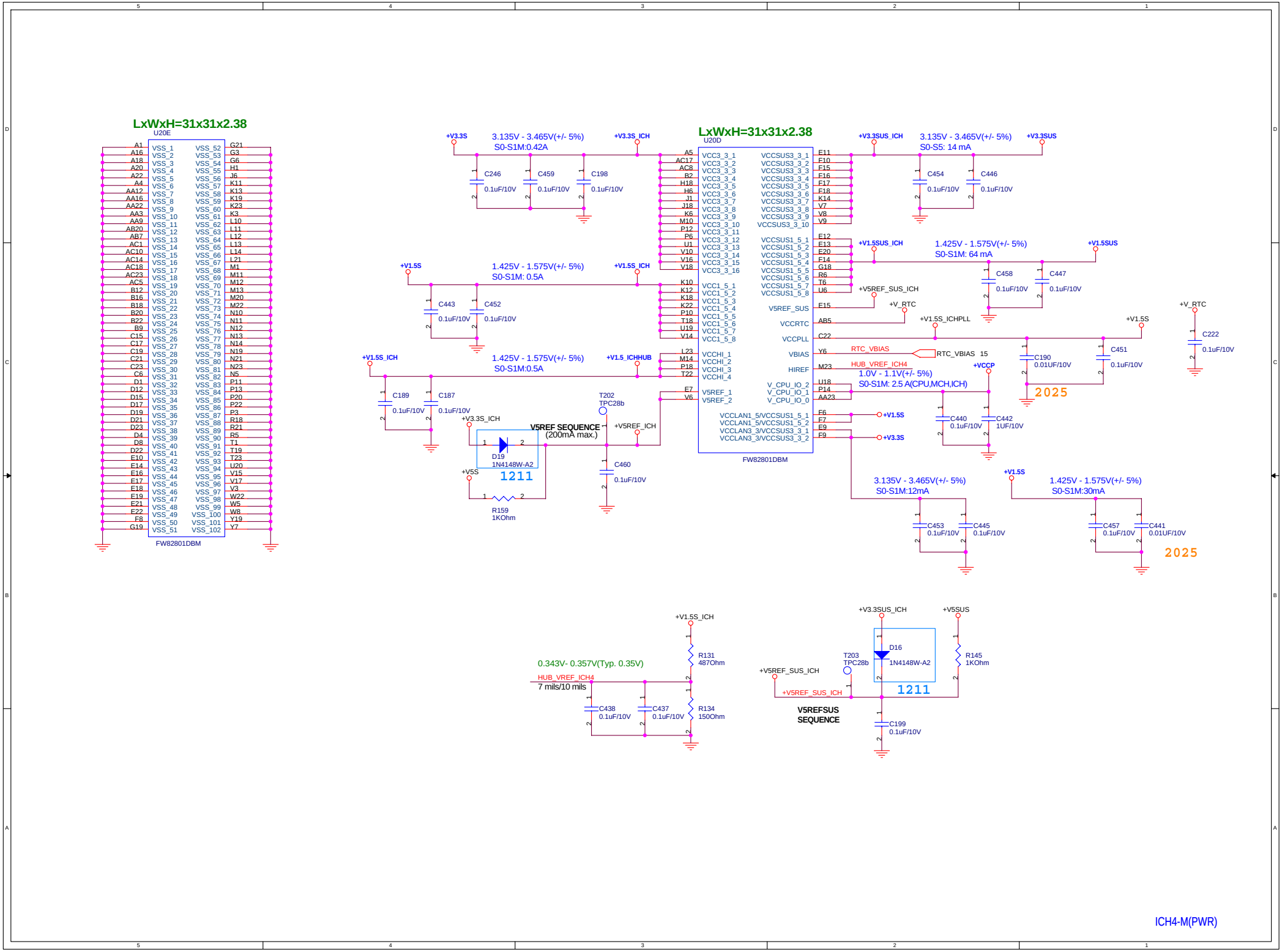
LxWxH=31x31x2.38
U20E
FW82801DBM
LxWxH=31x31x2.38
U20D
FW82801DBM
+V3.3S
3.135V - 3.465V(+/- 5%)
S0-S1M:0.42A
+V3.3S_ICH
C246 0.1uF/10V
C459 0.1uF/10V
C198 0.1uF/10V
+V3.3SUS_ICH
3.135V - 3.465V(+/- 5%)
S0-S5: 14 mA
+V3.3SUS
C454 0.1uF/10V
C446 0.1uF/10V
+V1.5S
1.425V - 1.575V(+/- 5%)
S0-S1M: 0.5A
+V1.5S_ICH
C443 0.1uF/10V
C452 0.1uF/10V
+V1.5SUS_ICH
1.425V - 1.575V(+/- 5%)
S0-S1M: 64 mA
+V1.5SUS
C458 0.1uF/10V
C447 0.1uF/10V
+V5REF_SUS_ICH
+V_RTC
+V1.5S_ICHPLL
+V1.5S
+V_RTC
C222 0.1uF/10V
RTC_VBIAS
RTC_VBIAS 15
C190 0.01UF/10V
C451 0.1uF/10V
2025
+V1.5S_ICH
1.425V - 1.575V(+/- 5%)
S0-S1M:0.5A
+V1.5_ICHHUB
C189 0.1uF/10V
C187 0.1uF/10V
HUB_VREF_ICH4
1.0V - 1.1V(+/- 5%)
S0-S1M: 2.5 A(CPU,MCH,ICH)
+VCCP
C440 0.1uF/10V
C442 1UF/10V
T202
TPC28b
+V3.3S_ICH
V5REF SEQUENCE
(200mA max.)
+V5REF_ICH
D19
1N4148W-A2
1211
+V5S
R159
1KOhm
C460 0.1uF/10V
+V1.5S
3.135V - 3.465V(+/- 5%)
S0-S1M:12mA
C453 0.1uF/10V
C445 0.1uF/10V
+V1.5S
1.425V - 1.575V(+/- 5%)
S0-S1M:30mA
C457 0.1uF/10V
C441 0.01UF/10V
2025
+V1.5S_ICH
0.343V- 0.357V(Typ. 0.35V)
HUB_VREF_ICH4
7 mils/10 mils
R131
487Ohm
C438 0.1uF/10V
C437 0.1uF/10V
R134
150Ohm
+V3.3SUS_ICH
+V5SUS
D16
1N4148W-A2
T203
TPC28b
R145
1KOhm
+V5REF_SUS_ICH
+V5REF_SUS_ICH
1211
V5REFSUS
SEQUENCE
C199 0.1uF/10V
ICH4-M(PWR)

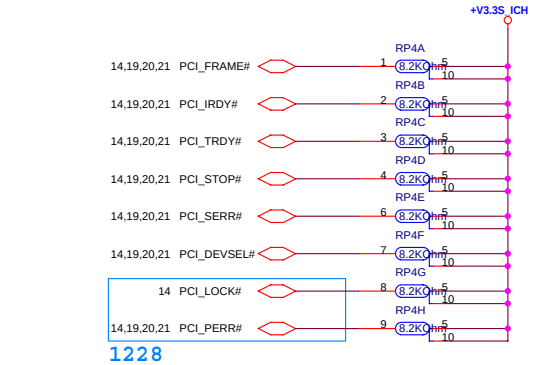

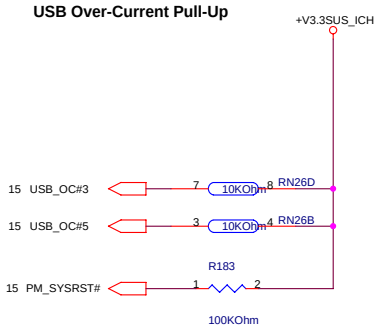

ICH4 SMLink & SMbus must be tied together

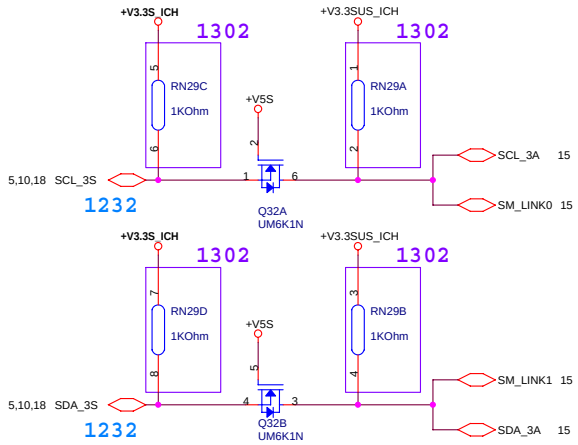

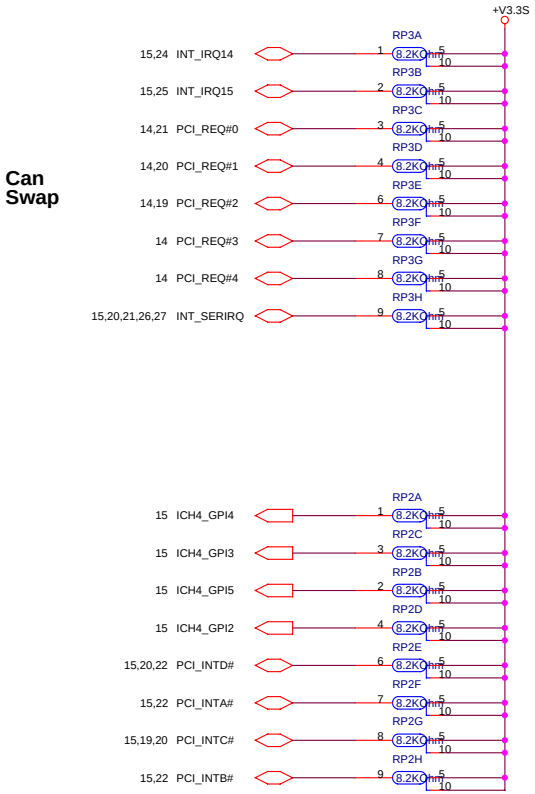

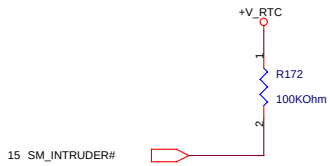

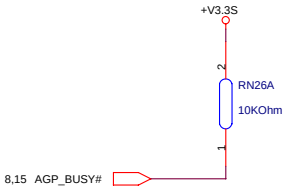

BATTERY LOW

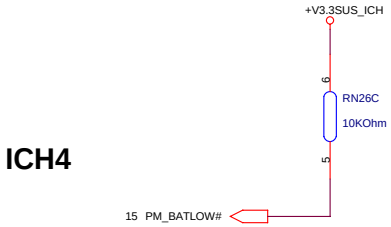

ICH4-M(PULLUP)

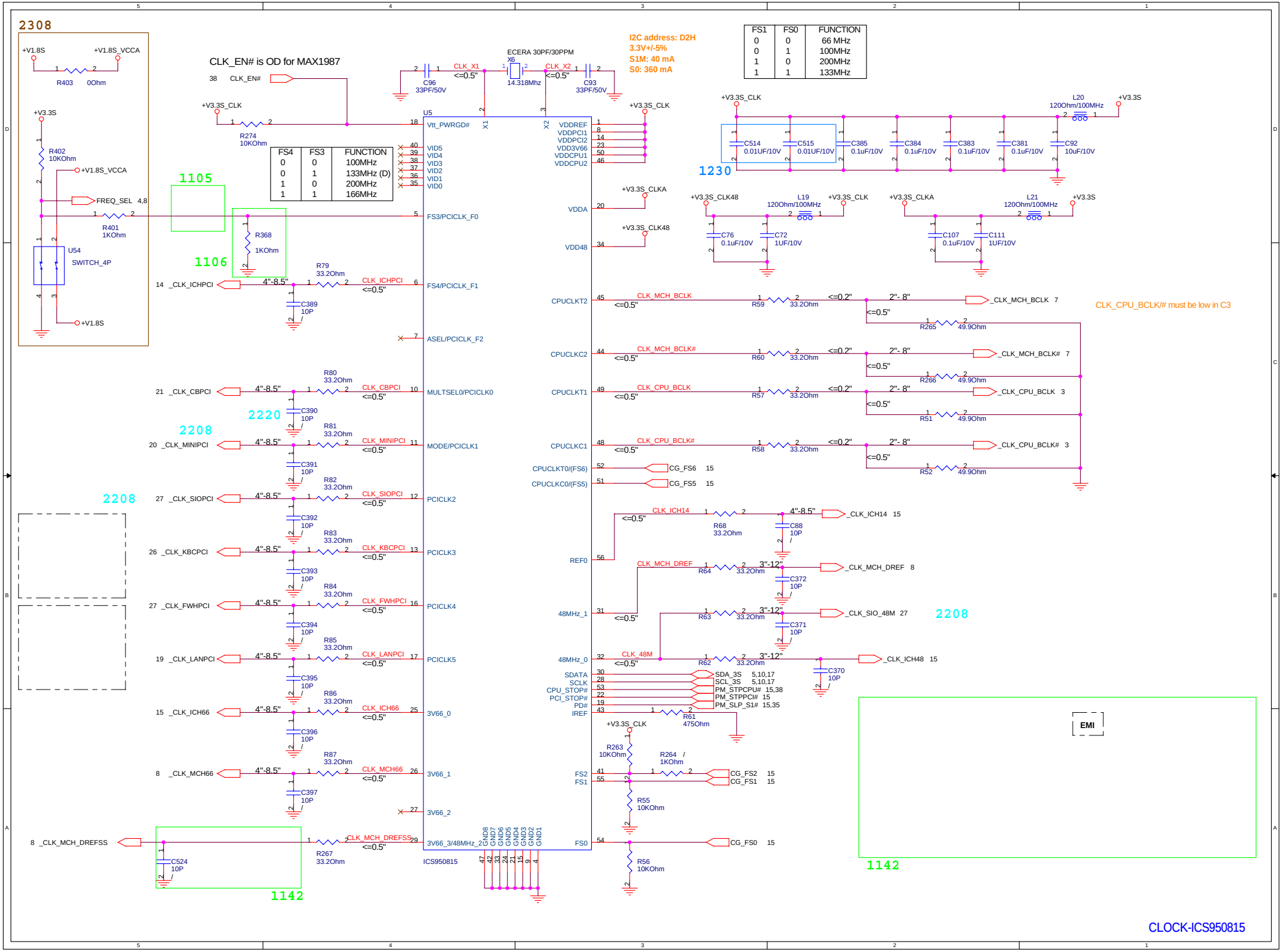
2308
+V1.8S
+V1.8S_VCCA
R403 0Ohm
+V3.3S
R402 10KOhm
+V1.8S_VCCA
FREQ_SEL 4,8
R401 1KOhm
U54
SWITCH_4P
+V1.8S
CLK_EN# is OD for MAX1987
38 CLK_EN#
+V3.3S_CLK
R274 10KOhm
1105
1106
R368 1KOhm
C96 33PF/50V
CLK_X1 <=0.5"
ECERA 30PF/30PPM
X6
14.318Mhz
CLK_X2 <=0.5"
C93 33PF/50V
I2C address: D2H
3.3V+/-5%
S1M: 40 mA
S0: 360 mA
FS1 FS0 FUNCTION
0 0 66 MHz
0 1 100MHz
1 0 200MHz
1 1 133MHz
FS4 FS3 FUNCTION
0 0 100MHz
0 1 133MHz (D)
1 0 200MHz
1 1 166MHz
U5
Vtt_PWRGD#
VID5
VID4
VID3
VID2
VID1
VID0
FS3/PCICLK_F0
ASEL/PCICLK_F2
MULTSEL0/PCICLK0
MODE/PCICLK1
PCICLK2
PCICLK3
PCICLK4
PCICLK5
3V66_0
3V66_1
3V66_2
3V66_3/48MHz_2
ICS950815
VDDREF
VDDPCI1
VDDPCI2
VDD3V66
VDDCPU1
VDDCPU2
VDDA
VDD48
CPUCLKT2
CPUCLKC2
CPUCLKT1
CPUCLKC1
CPUCLKT0/(FS6)
CPUCLKC0/(FS5)
REF0
48MHz_1
48MHz_0
SDATA
SCLK
CPU_STOP#
PCI_STOP#
PD#
IREF
FS2
FS1
FS0
GND8 GND7 GND6 GND5 GND4 GND3 GND2 GND1
+V3.3S_CLK
+V3.3S_CLKA
+V3.3S_CLK48
+V3.3S
L20 120Ohm/100MHz
C514 0.01UF/10V
C515 0.01UF/10V
C385 0.1uF/10V
C384 0.1uF/10V
C383 0.1uF/10V
C381 0.1uF/10V
C92 10uF/10V
1230
L19 120Ohm/100MHz
C76 0.1uF/10V
C72 1UF/10V
L21 120Ohm/100MHz
C107 0.1uF/10V
C111 1UF/10V
14 _CLK_ICHPCI
CLK_ICHPCI <=0.5"
R79 33.2Ohm
C389 10P
21 _CLK_CBPCI
CLK_CBPCI <=0.5"
R80 33.2Ohm
C390 10P
2220
2208
20 _CLK_MINIPCI
CLK_MINIPCI <=0.5"
R81 33.2Ohm
C391 10P
27 _CLK_SIOPCI
CLK_SIOPCI <=0.5"
R82 33.2Ohm
C392 10P
26 _CLK_KBCPCI
CLK_KBCPCI <=0.5"
R83 33.2Ohm
C393 10P
27 _CLK_FWHPCI
CLK_FWHPCI <=0.5"
R84 33.2Ohm
C394 10P
19 _CLK_LANPCI
CLK_LANPCI <=0.5"
R85 33.2Ohm
C395 10P
15 _CLK_ICH66
CLK_ICH66 <=0.5"
R86 33.2Ohm
C396 10P
8 _CLK_MCH66
CLK_MCH66 <=0.5"
R87 33.2Ohm
C397 10P
8 _CLK_MCH_DREFSS
CLK_MCH_DREFSS <=0.5"
R267 33.2Ohm
C524 10P
1142
CPUCLKT2
CLK_MCH_BCLK <=0.5"
R59 33.2Ohm
_CLK_MCH_BCLK 7
R265 49.9Ohm
CPUCLKC2
CLK_MCH_BCLK# <=0.5"
R60 33.2Ohm
_CLK_MCH_BCLK# 7
R266 49.9Ohm
CPUCLKT1
CLK_CPU_BCLK <=0.5"
R57 33.2Ohm
_CLK_CPU_BCLK 3
R51 49.9Ohm
CPUCLKC1
CLK_CPU_BCLK# <=0.5"
R58 33.2Ohm
_CLK_CPU_BCLK# 3
R52 49.9Ohm
CG_FS6 15
CG_FS5 15
CLK_CPU_BCLK/# must be low in C3
CLK_ICH14 <=0.5"
R68 33.2Ohm
C88 10P
_CLK_ICH14 15
CLK_MCH_DREF
R64 33.2Ohm
C372 10P
_CLK_MCH_DREF 8
R63 33.2Ohm
C371 10P
_CLK_SIO_48M 27
2208
CLK_48M <=0.5"
R62 33.2Ohm
C370 10P
_CLK_ICH48 15
SDA_3S 5,10,17
SCL_3S 5,10,17
PM_STPCPU# 15,38
PM_STPPCI# 15
PM_SLP_S1# 15,35
R61 475Ohm
R263 10KOhm
R264 1KOhm
CG_FS2 15
CG_FS1 15
R55 10KOhm
CG_FS0 15
R56 10KOhm
EMI
1142
CLOCK-ICS950815

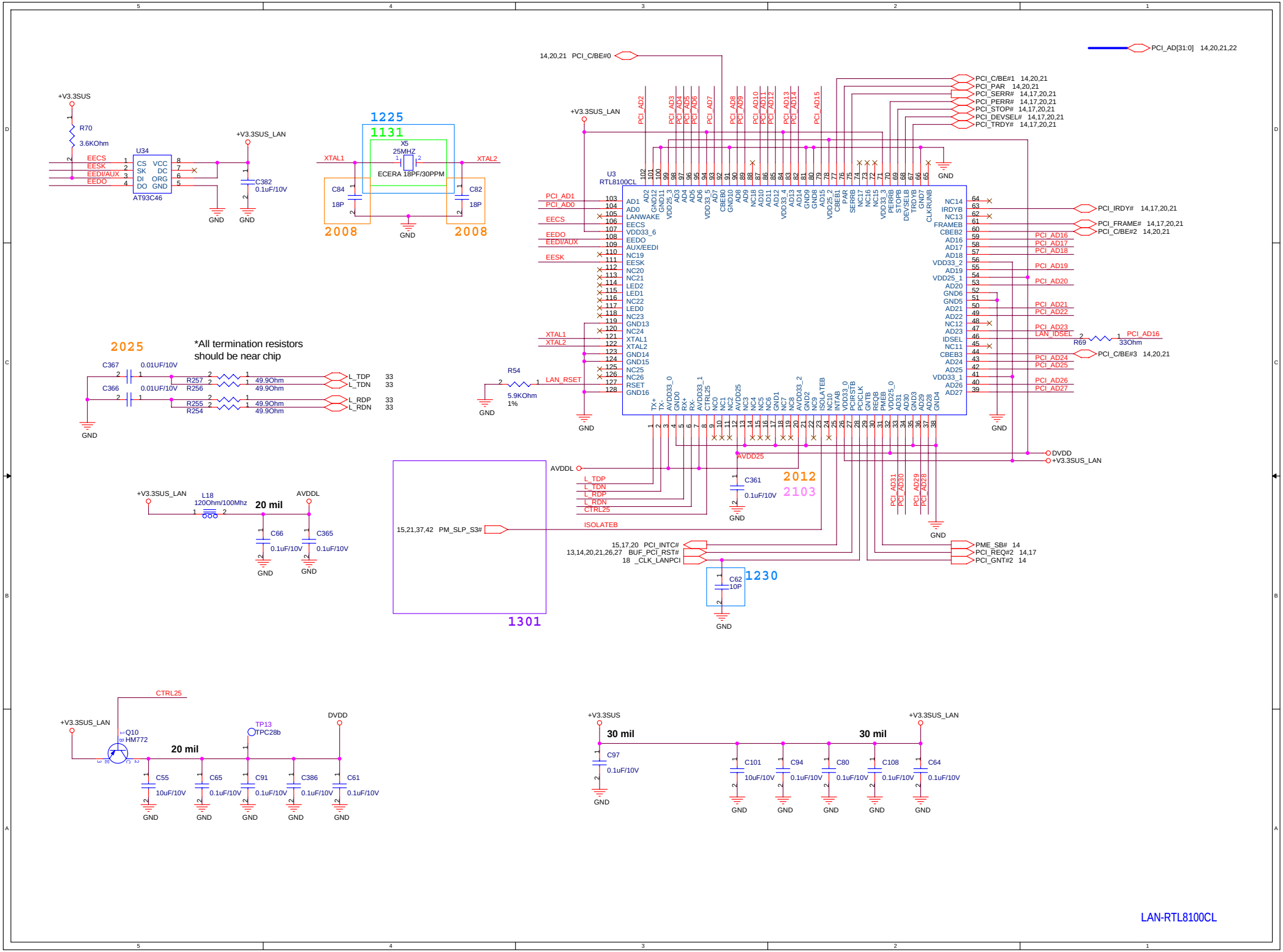
PCI_AD[31:0] 14,20,21,22
14,20,21 PCI_C/BE#0
PCI_C/BE#1 14,20,21
PCI_PAR 14,20,21
PCI_SERR# 14,17,20,21
PCI_PERR# 14,17,20,21
PCI_STOP# 14,17,20,21
PCI_DEVSEL# 14,17,20,21
PCI_TRDY# 14,17,20,21
+V3.3SUS
R70
3.6KOhm
U34
EECS
EESK
EEDI/AUX
EEDO
CS VCC
SK DC
DI ORG
DO GND
AT93C46
+V3.3SUS_LAN
C382
0.1uF/10V
GND
1225
1131
X5
25MHZ
ECERA 18PF/30PPM
XTAL1
XTAL2
C84
18P
C82
18P
2008
2008
U3
RTL8100CL
+V3.3SUS_LAN
PCI_AD1
PCI_AD0
EECS
EEDO
EEDI/AUX
EESK
XTAL1
XTAL2
LAN_RSET
R54
5.9KOhm
1%
PCI_IRDY# 14,17,20,21
PCI_FRAME# 14,17,20,21
PCI_C/BE#2 14,20,21
PCI_AD16
PCI_AD17
PCI_AD18
PCI_AD19
PCI_AD20
PCI_AD21
PCI_AD22
PCI_AD23
LAN_IDSEL
R69
33Ohm
PCI_C/BE#3 14,20,21
PCI_AD24
PCI_AD25
PCI_AD26
PCI_AD27
2025
*All termination resistors
should be near chip
C367
0.01UF/10V
C366
0.01UF/10V
R257
R256
R255
R254
49.9Ohm
L_TDP 33
L_TDN 33
L_RDP 33
L_RDN 33
AVDDL
AVDD25
DVDD
+V3.3SUS_LAN
C361
0.1uF/10V
2012
2103
L_TDP
L_TDN
L_RDP
L_RDN
CTRL25
ISOLATEB
PCI_AD31
PCI_AD30
PCI_AD29
PCI_AD28
+V3.3SUS_LAN
L18
120Ohm/100Mhz
20 mil
AVDDL
C66
0.1uF/10V
C365
0.1uF/10V
15,21,37,42 PM_SLP_S3#
15,17,20 PCI_INTC#
13,14,20,21,26,27 BUF_PCI_RST#
18 _CLK_LANPCI
PME_SB# 14
PCI_REQ#2 14,17
PCI_GNT#2 14
C62
10P
1230
1301
CTRL25
+V3.3SUS_LAN
Q10
HM772
TP13
TPC28b
DVDD
20 mil
C55
10uF/10V
C65
0.1uF/10V
C91
0.1uF/10V
C386
0.1uF/10V
C61
0.1uF/10V
+V3.3SUS
30 mil
C97
0.1uF/10V
+V3.3SUS_LAN
30 mil
C101
10uF/10V
C94
0.1uF/10V
C80
0.1uF/10V
C108
0.1uF/10V
C64
0.1uF/10V
LAN-RTL8100CL

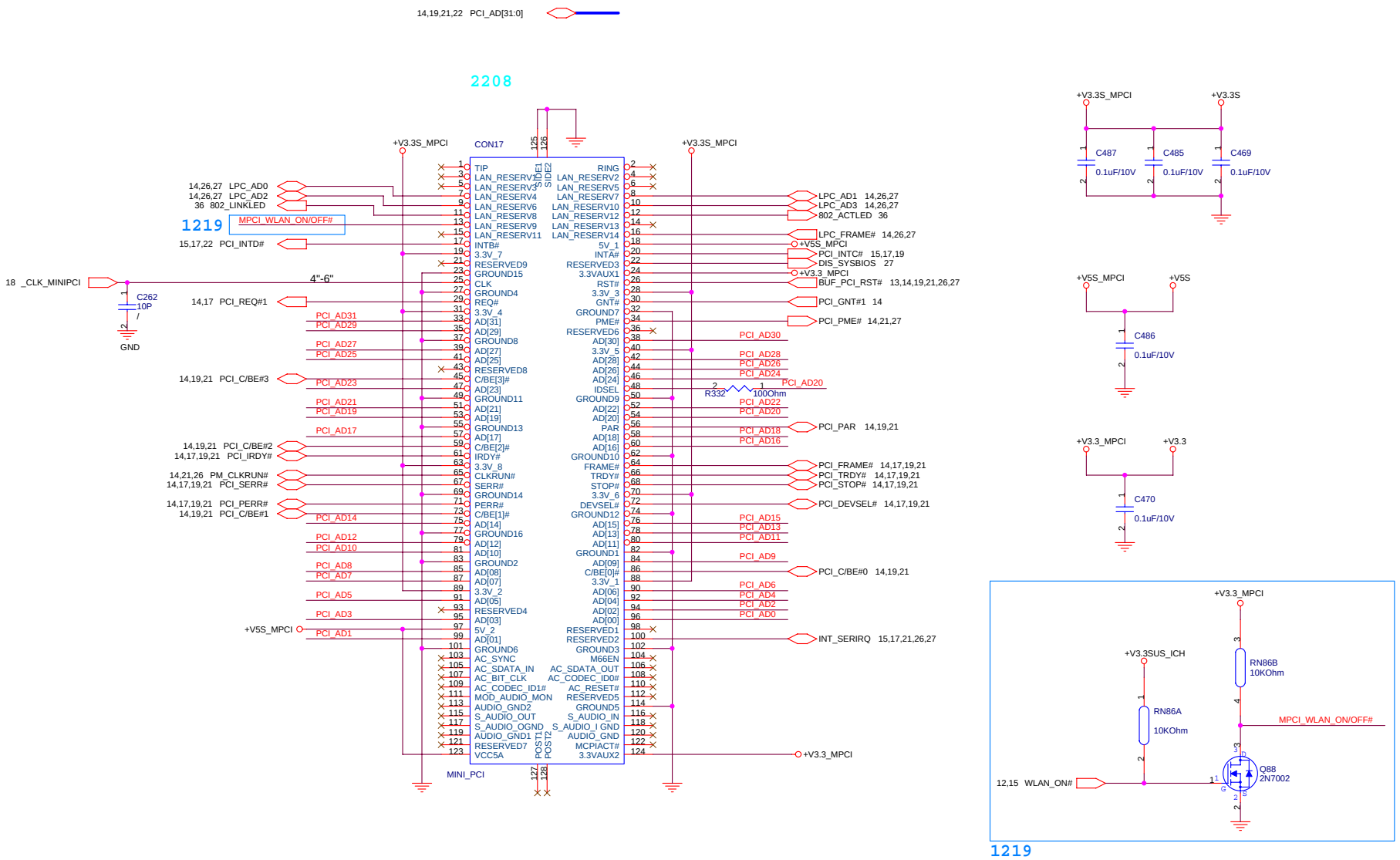
14,19,21,22 PCI_AD[31:0]
2208
CON17
MINI_PCI
+V3.3S_MPCI
+V3.3_MPCI
+V5S_MPCI
14,26,27 LPC_AD0
14,26,27 LPC_AD2
36 802_LINKLED
1219
MPCI_WLAN_ON/OFF#
15,17,22 PCI_INTD#
18 _CLK_MINIPCI
C262
10P
GND
4"-6"
14,17 PCI_REQ#1
PCI_AD31
PCI_AD29
PCI_AD27
PCI_AD25
14,19,21 PCI_C/BE#3
PCI_AD23
PCI_AD21
PCI_AD19
PCI_AD17
14,19,21 PCI_C/BE#2
14,17,19,21 PCI_IRDY#
14,21,26 PM_CLKRUN#
14,17,19,21 PCI_SERR#
14,17,19,21 PCI_PERR#
14,19,21 PCI_C/BE#1
PCI_AD14
PCI_AD12
PCI_AD10
PCI_AD8
PCI_AD7
PCI_AD5
PCI_AD3
PCI_AD1
LPC_AD1 14,26,27
LPC_AD3 14,26,27
802_ACTLED 36
LPC_FRAME# 14,26,27
PCI_INTC# 15,17,19
DIS_SYSBIOS 27
BUF_PCI_RST# 13,14,19,21,26,27
PCI_GNT#1 14
PCI_PME# 14,21,27
PCI_AD30
PCI_AD28
PCI_AD26
PCI_AD24
PCI_AD20
R332
100Ohm
PCI_AD22
PCI_AD20
PCI_PAR 14,19,21
PCI_AD18
PCI_AD16
PCI_FRAME# 14,17,19,21
PCI_TRDY# 14,17,19,21
PCI_STOP# 14,17,19,21
PCI_DEVSEL# 14,17,19,21
PCI_AD15
PCI_AD13
PCI_AD11
PCI_AD9
PCI_C/BE#0 14,19,21
PCI_AD6
PCI_AD4
PCI_AD2
PCI_AD0
INT_SERIRQ 15,17,21,26,27
+V3.3_MPCI
+V3.3S
C487
C485
C469
0.1uF/10V
C486
C470
+V3.3SUS_ICH
RN86A
10KOhm
RN86B
10KOhm
12,15 WLAN_ON#
Q88
2N7002
1219

MINIPCI

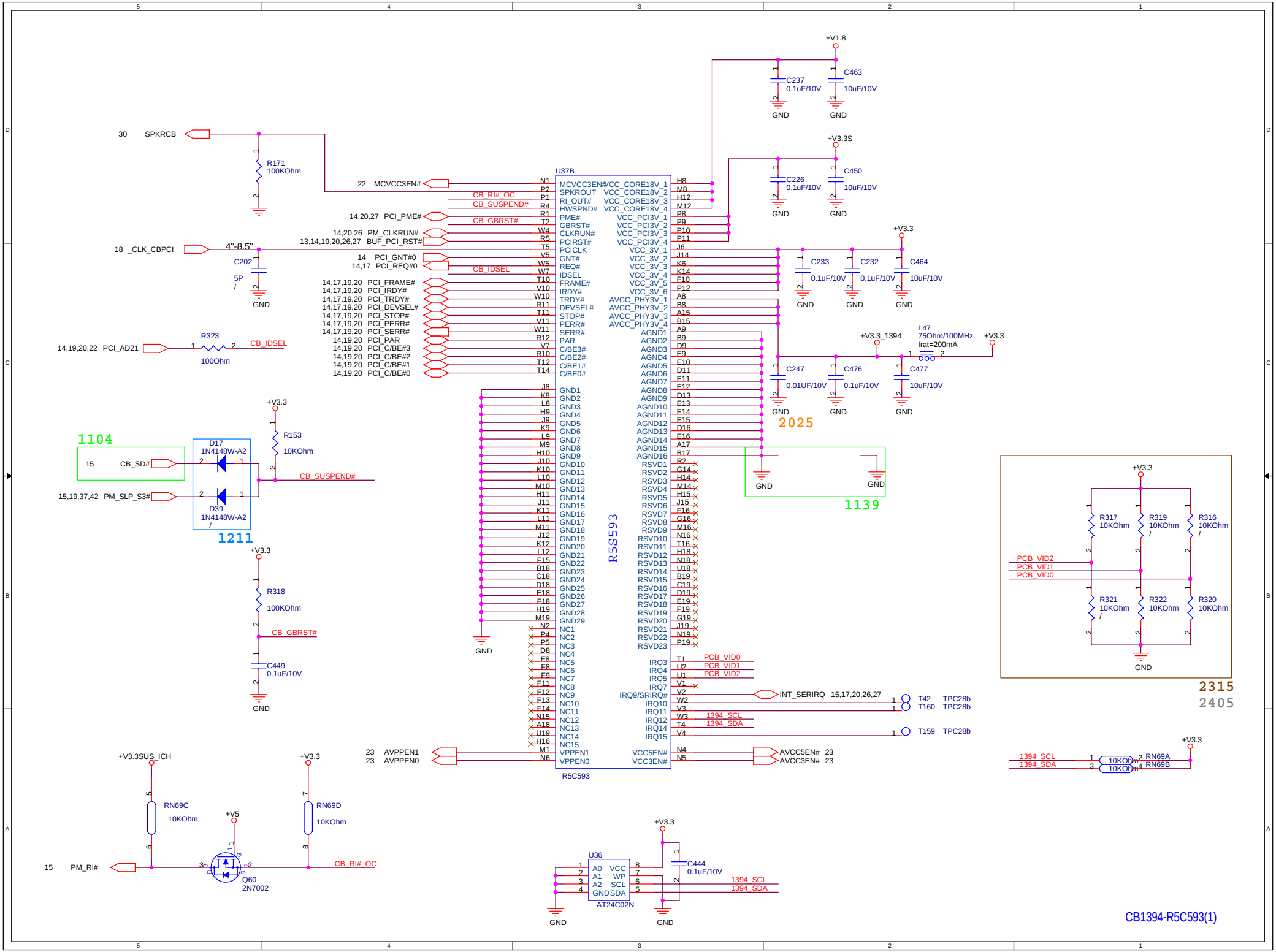
U37B
R5S593
R5C593
30 SPKRCB
R171 100KOhm
22 MCVCC3EN#
CB_RI#_OC
CB_SUSPEND#
14,20,27 PCI_PME#
CB_GBRST#
14,20,26 PM_CLKRUN#
13,14,19,20,26,27 BUF_PCI_RST#
18 _CLK_CBPCI
4"-8.5"
C202 5P /
14 PCI_GNT#0
14,17 PCI_REQ#0
CB_IDSEL
14,17,19,20 PCI_FRAME#
14,17,19,20 PCI_IRDY#
14,17,19,20 PCI_TRDY#
14,17,19,20 PCI_DEVSEL#
14,17,19,20 PCI_STOP#
14,17,19,20 PCI_PERR#
14,17,19,20 PCI_SERR#
14,19,20 PCI_PAR
14,19,20 PCI_C/BE#3
14,19,20 PCI_C/BE#2
14,19,20 PCI_C/BE#1
14,19,20 PCI_C/BE#0
14,19,20,22 PCI_AD21
R323 100Ohm
CB_IDSEL
+V1.8
C237 0.1uF/10V
C463 10uF/10V
+V3.3S
C226 0.1uF/10V
C450 10uF/10V
+V3.3
C233 0.1uF/10V
C232 0.1uF/10V
C464 10uF/10V
+V3.3_1394
L47 75Ohm/100MHz Irat=200mA
C247 0.01UF/10V
C476 0.1uF/10V
C477 10uF/10V
2025
1139
1104
15 CB_SD#
15,19,37,42 PM_SLP_S3#
D17 1N4148W-A2
D39 1N4148W-A2 /
1211
R153 10KOhm
CB_SUSPEND#
R318 100KOhm
CB_GBRST#
C449 0.1uF/10V
PCB_VID2
PCB_VID1
PCB_VID0
R317 10KOhm
R319 10KOhm /
R316 10KOhm /
R321 10KOhm /
R322 10KOhm
R320 10KOhm
2315
2405
INT_SERIRQ 15,17,20,26,27
T42 TPC28b
T160 TPC28b
T159 TPC28b
1394_SCL
1394_SDA
23 AVPPEN1
23 AVPPEN0
AVCC5EN# 23
AVCC3EN# 23
RN69A
RN69B
10KOhm
+V3.3SUS_ICH
RN69C 10KOhm
RN69D 10KOhm
+V5
15 PM_RI#
Q60 2N7002
CB_RI#_OC
U36
AT24C02N
C444 0.1uF/10V
GND
CB1394-R5C593(1)

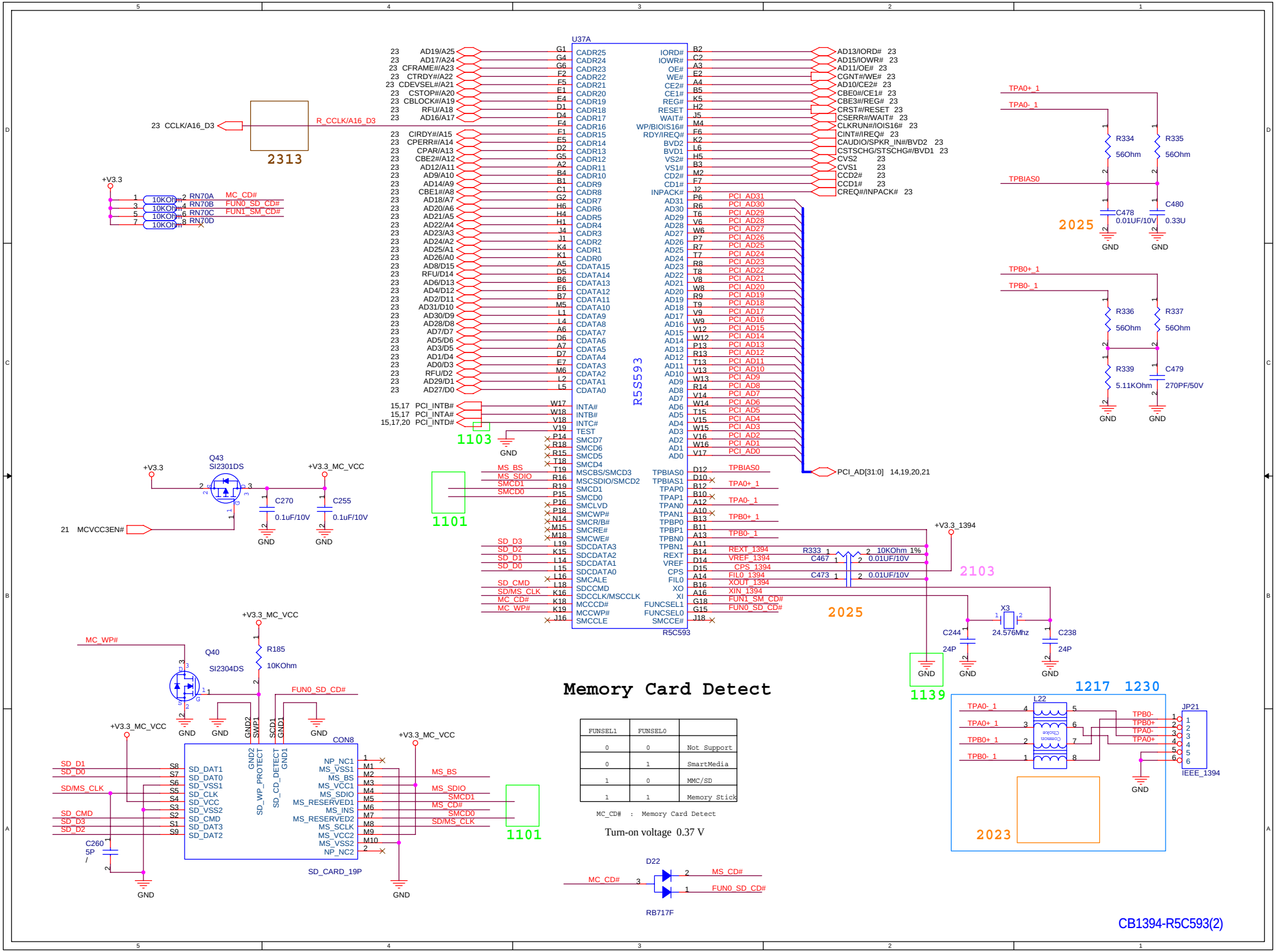
U37A
R5C593
2313
23 CCLK/A16_D3
R_CCLK/A16_D3
+V3.3
RN70A
RN70B
RN70C
RN70D
MC_CD#
FUN0_SD_CD#
FUN1_SM_CD#
1103
1101
Q43
SI2301DS
+V3.3_MC_VCC
C270
0.1uF/10V
C255
0.1uF/10V
21 MCVCC3EN#
GND
PCI_AD[31:0] 14,19,20,21
TPA0+_1
TPA0-_1
TPBIAS0
R334
56Ohm
R335
56Ohm
C478
0.01UF/10V
C480
0.33U
2025
TPB0+_1
TPB0-_1
R336
56Ohm
R337
56Ohm
R339
5.11KOhm
C479
270PF/50V
+V3.3_1394
R333
10KOhm 1%
C467
0.01UF/10V
C473
0.01UF/10V
2103
X3
24.576Mhz
C244
24P
C238
24P
1139
1217
1230
L22
JP21
IEEE_1394
2023
Q40
SI2304DS
R185
10KOhm
MC_WP#
FUN0_SD_CD#
CON8
SD_CARD_19P
C260
5P
/
Memory Card Detect
FUNSEL1 FUNSEL0
0 0 Not Support
0 1 SmartMedia
1 0 MMC/SD
1 1 Memory Stick
MC_CD# : Memory Card Detect
Turn-on voltage 0.37 V
D22
RB717F
CB1394-R5C593(2)

CB POWER SWITCH

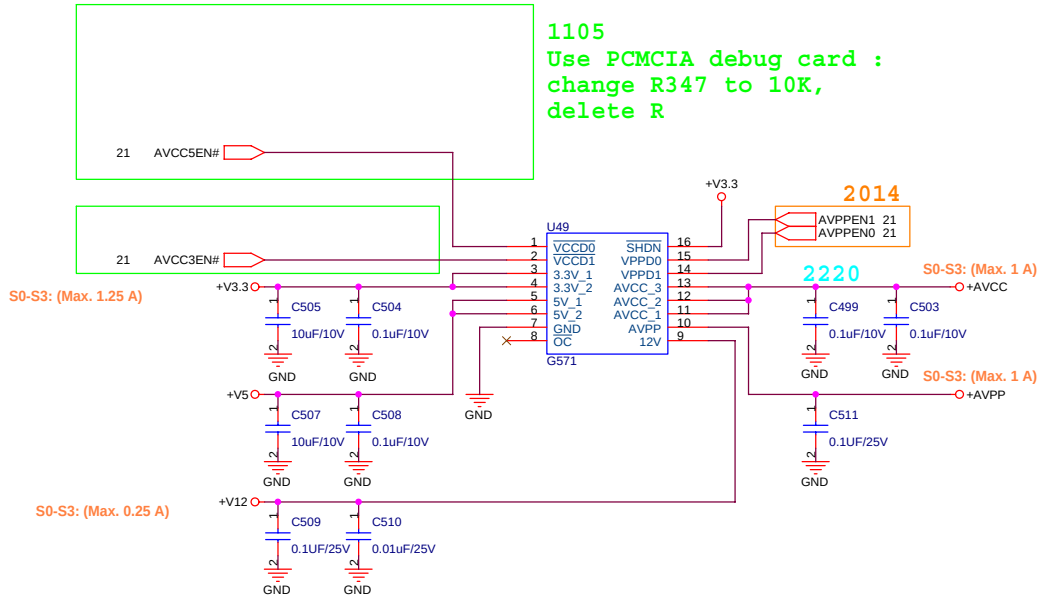

CB SOCKET

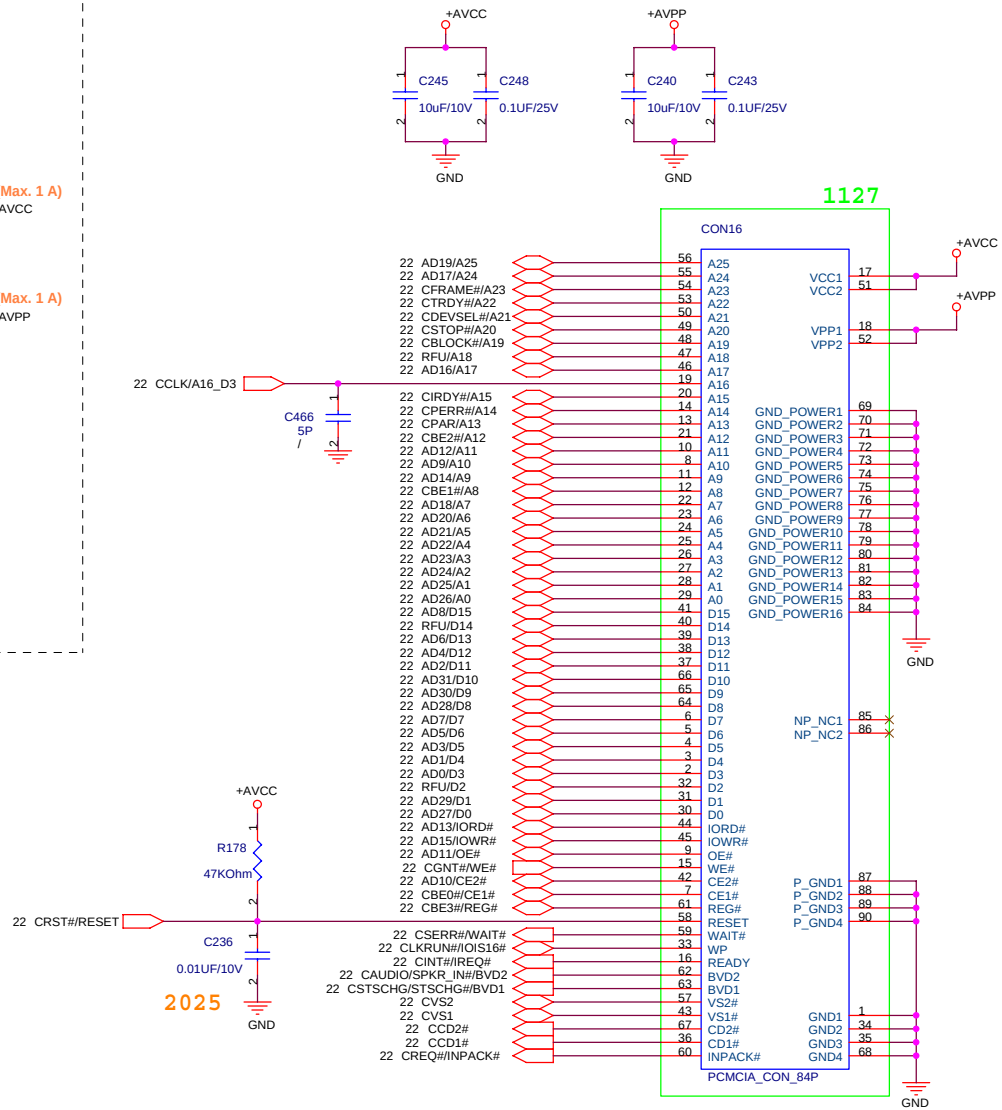

CB DE-BOUNCE

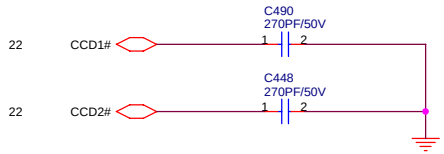

PCMCIA SOCKET

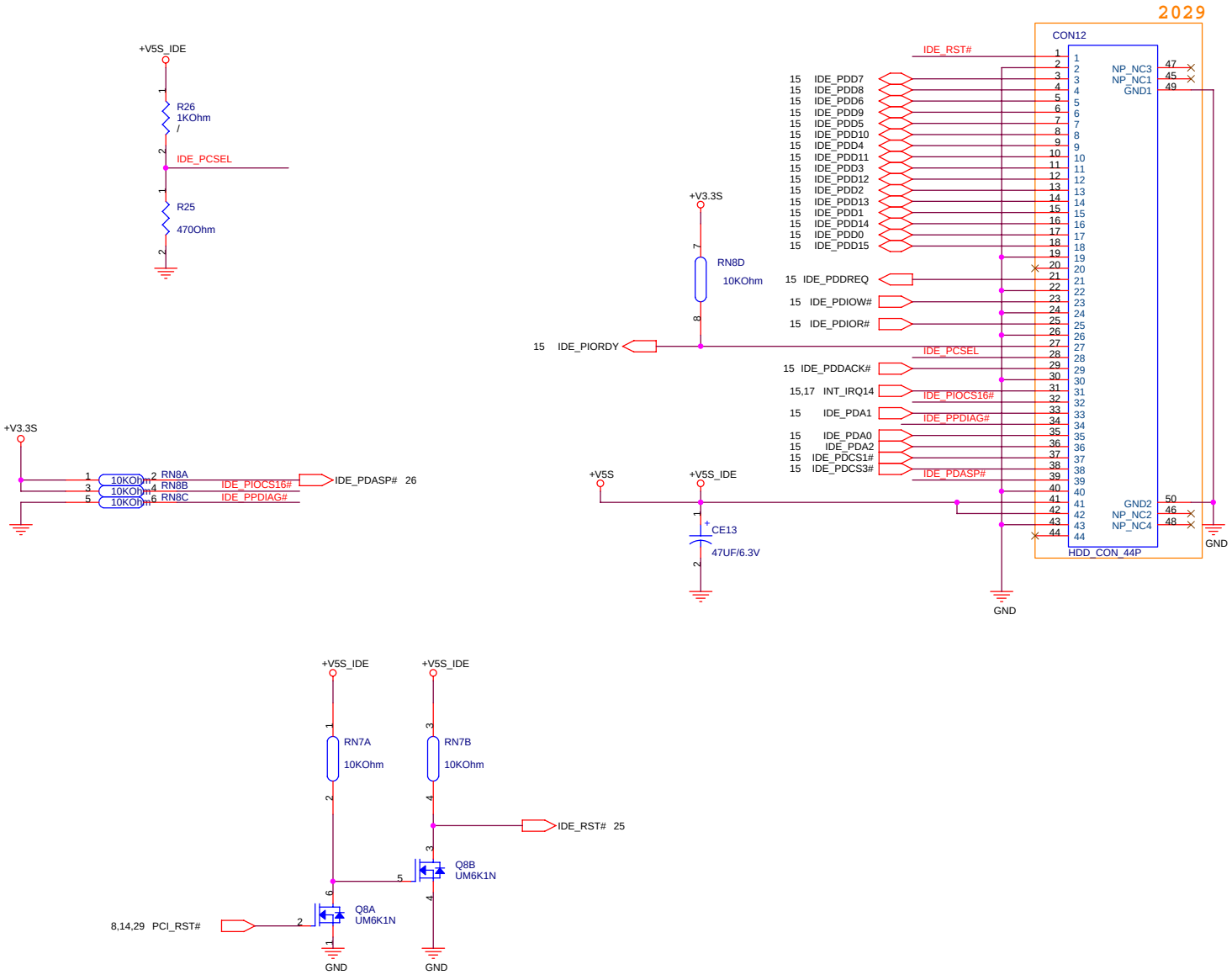

HDD Connector

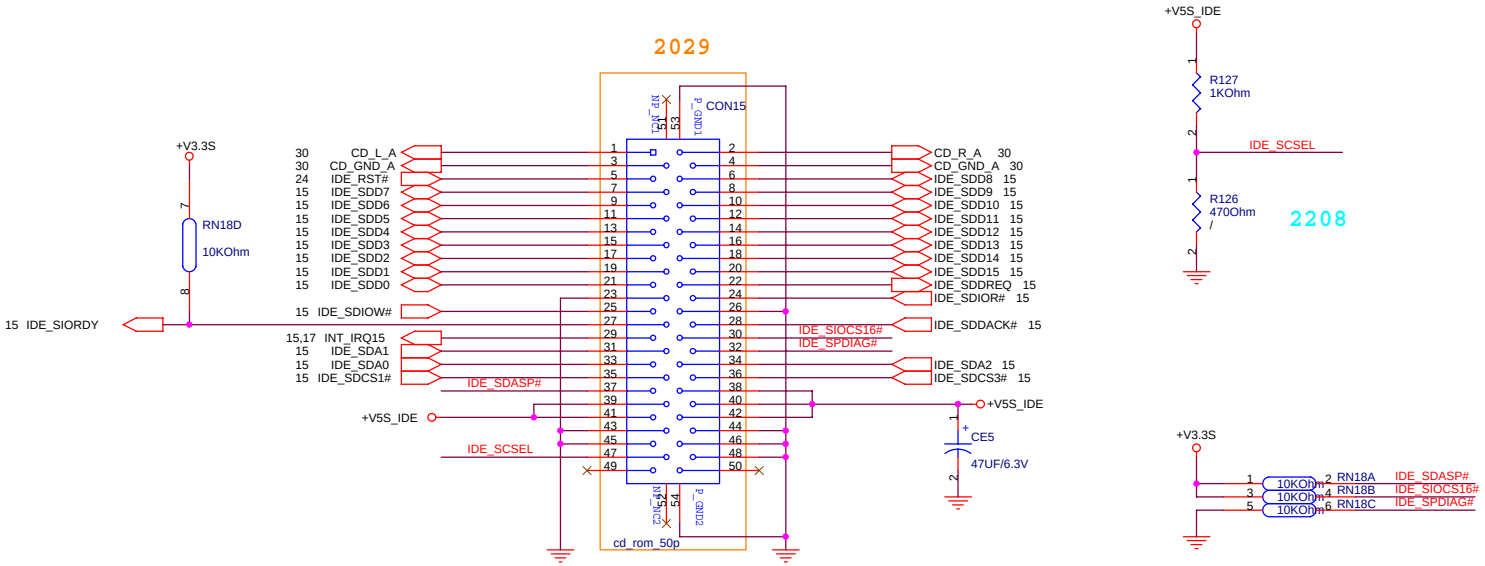

ODD Connector

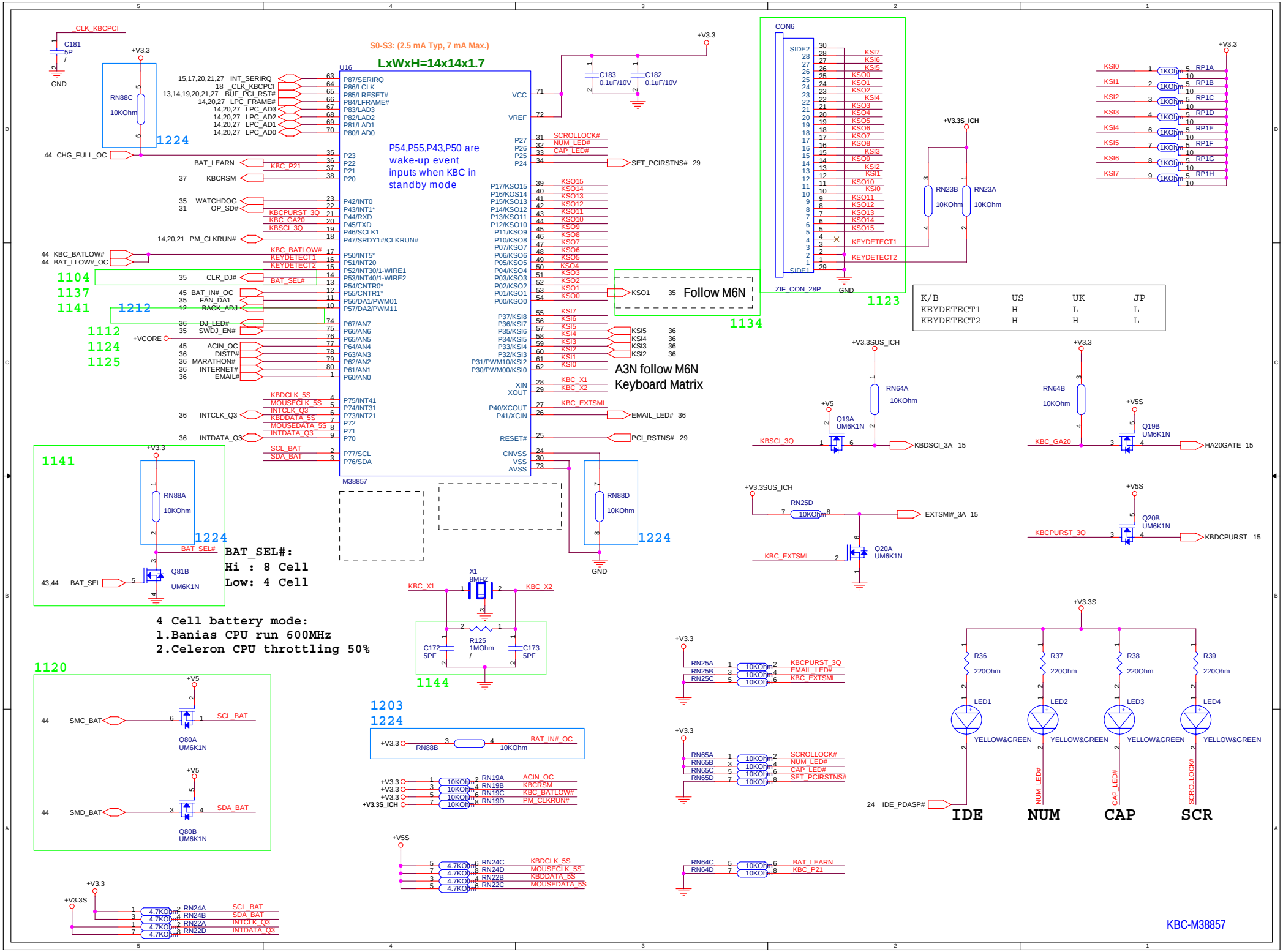
S0-S3: (2.5 mA Typ, 7 mA Max.)
LxWxH=14x14x1.7
U16
M38857
P54,P55,P43,P50 are wake-up event inputs when KBC in standby mode
Follow M6N
A3N follow M6N
Keyboard Matrix
CON6
ZIF_CON_28P
K/B US UK JP
KEYDETECT1 H L L
KEYDETECT2 H L L
BAT_SEL#:
Hi : 8 Cell
Low: 4 Cell
4 Cell battery mode:
1.Banias CPU run 600MHz
2.Celeron CPU throttling 50%
IDE
NUM
CAP
SCR
KBC-M38857

Super I/O

2208

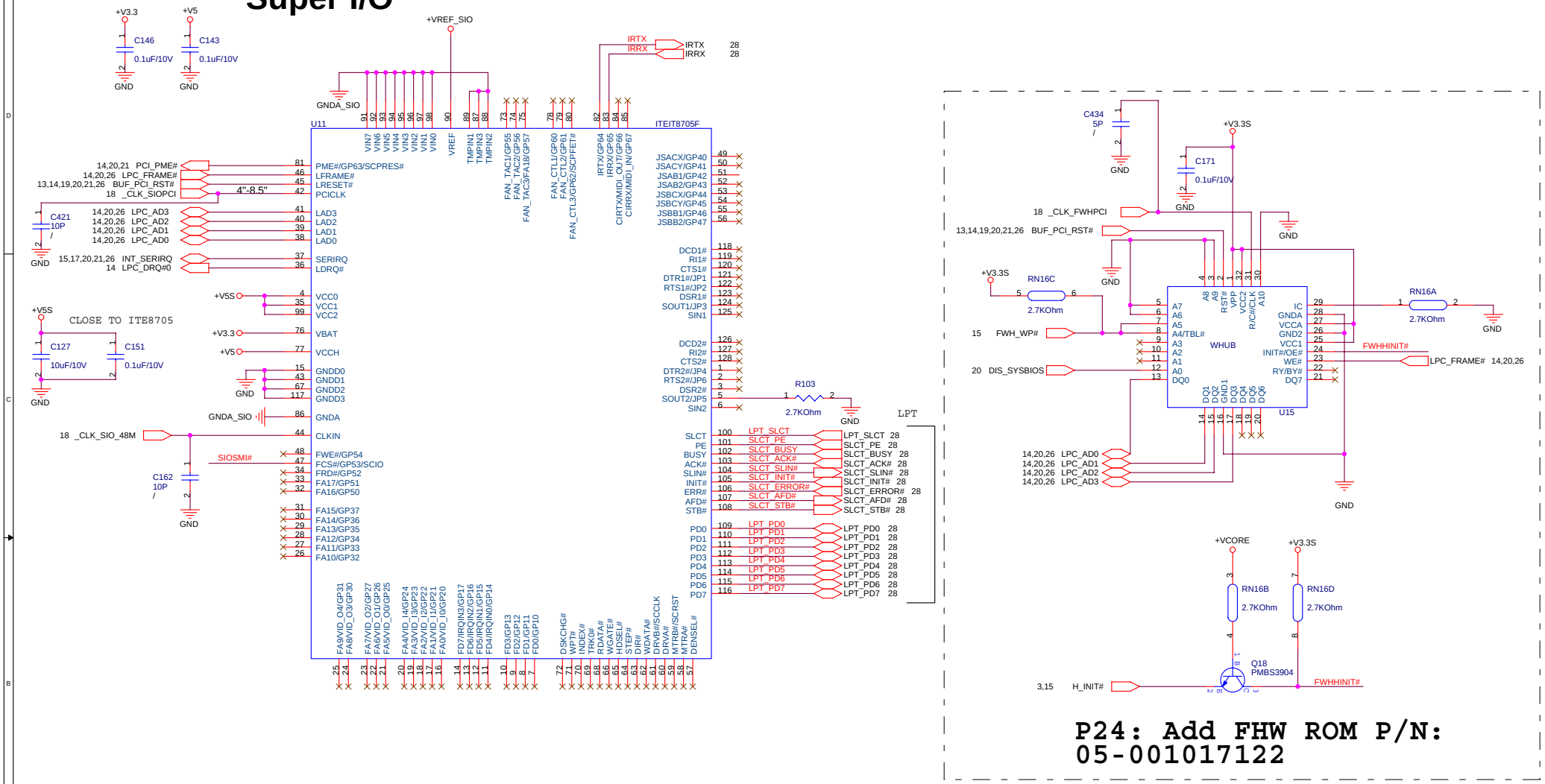

SIO-ITE8705

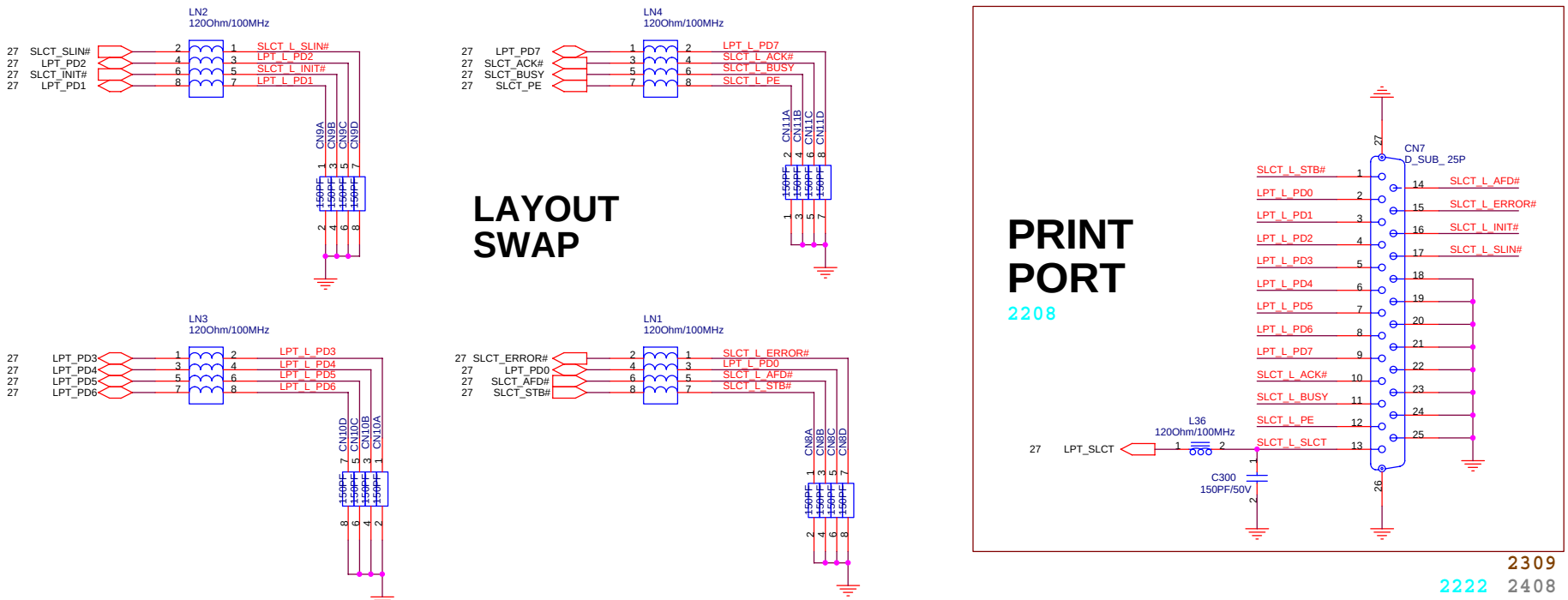
LN2
120Ohm/100MHz
27 SLCT_SLIN#
27 LPT_PD2
27 SLCT_INIT#
27 LPT_PD1
SLCT_L_SLIN#
LPT_L_PD2
SLCT_L_INIT#
LPT_L_PD1
CN9A CN9B CN9C CN9D
150PF
LN4
120Ohm/100MHz
27 LPT_PD7
27 SLCT_ACK#
27 SLCT_BUSY
27 SLCT_PE
LPT_L_PD7
SLCT_L_ACK#
SLCT_L_BUSY
SLCT_L_PE
CN11A CN11B CN11C CN11D
150PF
LAYOUT
SWAP
LN3
120Ohm/100MHz
27 LPT_PD3
27 LPT_PD4
27 LPT_PD5
27 LPT_PD6
LPT_L_PD3
LPT_L_PD4
LPT_L_PD5
LPT_L_PD6
CN10D CN10C CN10B CN10A
150PF
LN1
120Ohm/100MHz
27 SLCT_ERROR#
27 LPT_PD0
27 SLCT_AFD#
27 SLCT_STB#
SLCT_L_ERROR#
LPT_L_PD0
SLCT_L_AFD#
SLCT_L_STB#
CN8A CN8B CN8C CN8D
150PF
PRINT
PORT
2208
CN7
D_SUB_ 25P
SLCT_L_STB#
LPT_L_PD0
LPT_L_PD1
LPT_L_PD2
LPT_L_PD3
LPT_L_PD4
LPT_L_PD5
LPT_L_PD6
LPT_L_PD7
SLCT_L_ACK#
SLCT_L_BUSY
SLCT_L_PE
SLCT_L_SLCT
SLCT_L_AFD#
SLCT_L_ERROR#
SLCT_L_INIT#
SLCT_L_SLIN#
L36
120Ohm/100MHz
27 LPT_SLCT
C300
150PF/50V
2309
2222 2408

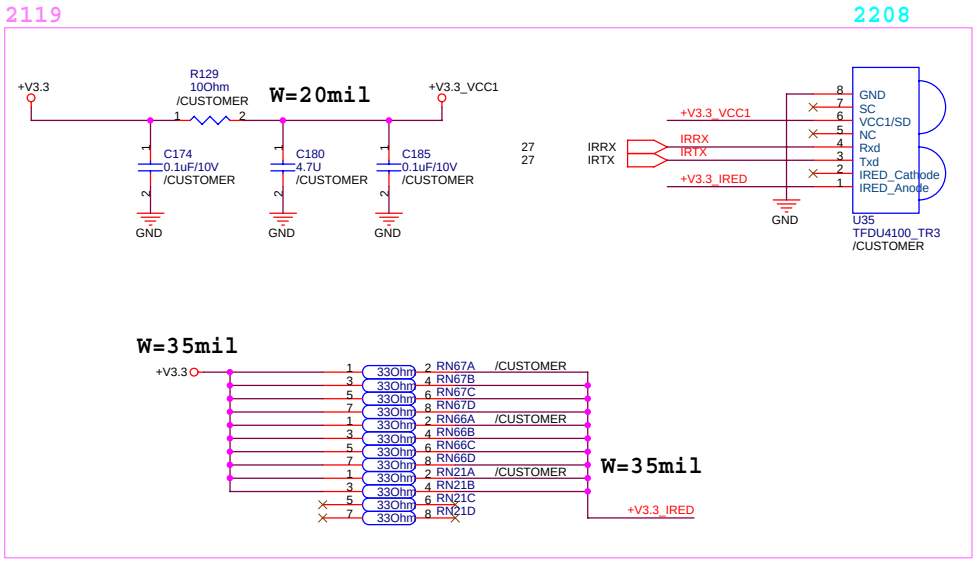
2119
2208
+V3.3
R129
10Ohm
/CUSTOMER
W=20mil
+V3.3_VCC1
C174
0.1uF/10V
/CUSTOMER
C180
4.7U
/CUSTOMER
C185
0.1uF/10V
/CUSTOMER
GND
27 IRRX
27 IRTX
+V3.3_VCC1
+V3.3_IRED
GND
SC
VCC1/SD
NC
Rxd
Txd
IRED_Cathode
IRED_Anode
U35
TFDU4100_TR3
/CUSTOMER
W=35mil
+V3.3
33Ohm
RN67A /CUSTOMER
RN67B
RN67C
RN67D
RN66A /CUSTOMER
RN66B
RN66C
RN66D
RN21A /CUSTOMER
RN21B
RN21C
RN21D
W=35mil
+V3.3_IRED

PCI_RSTNS# Gen Circuit

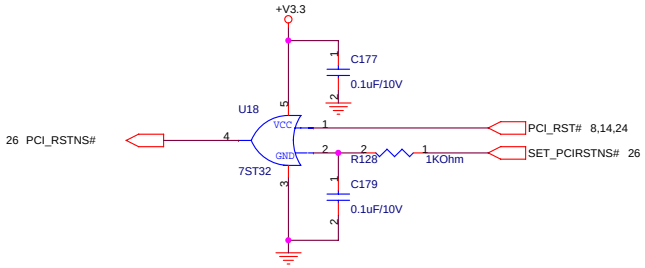

DISCHARGE CIRCUITS

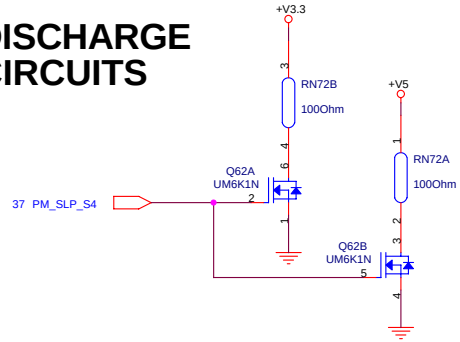

DISCHARGE CIRCUITS

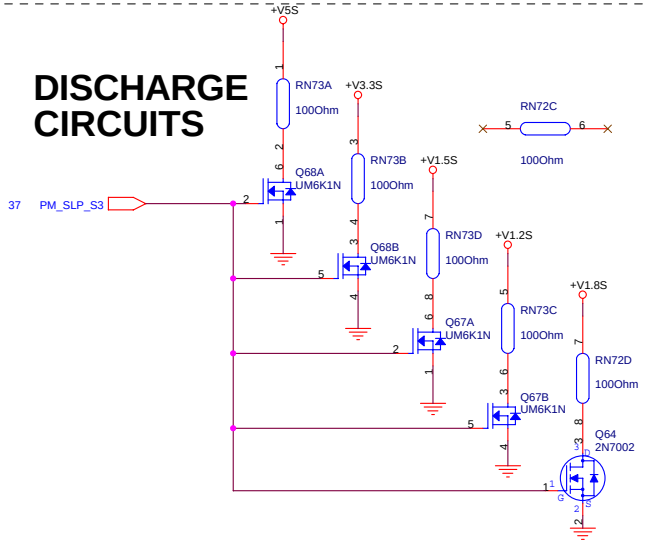

Discharge circuit

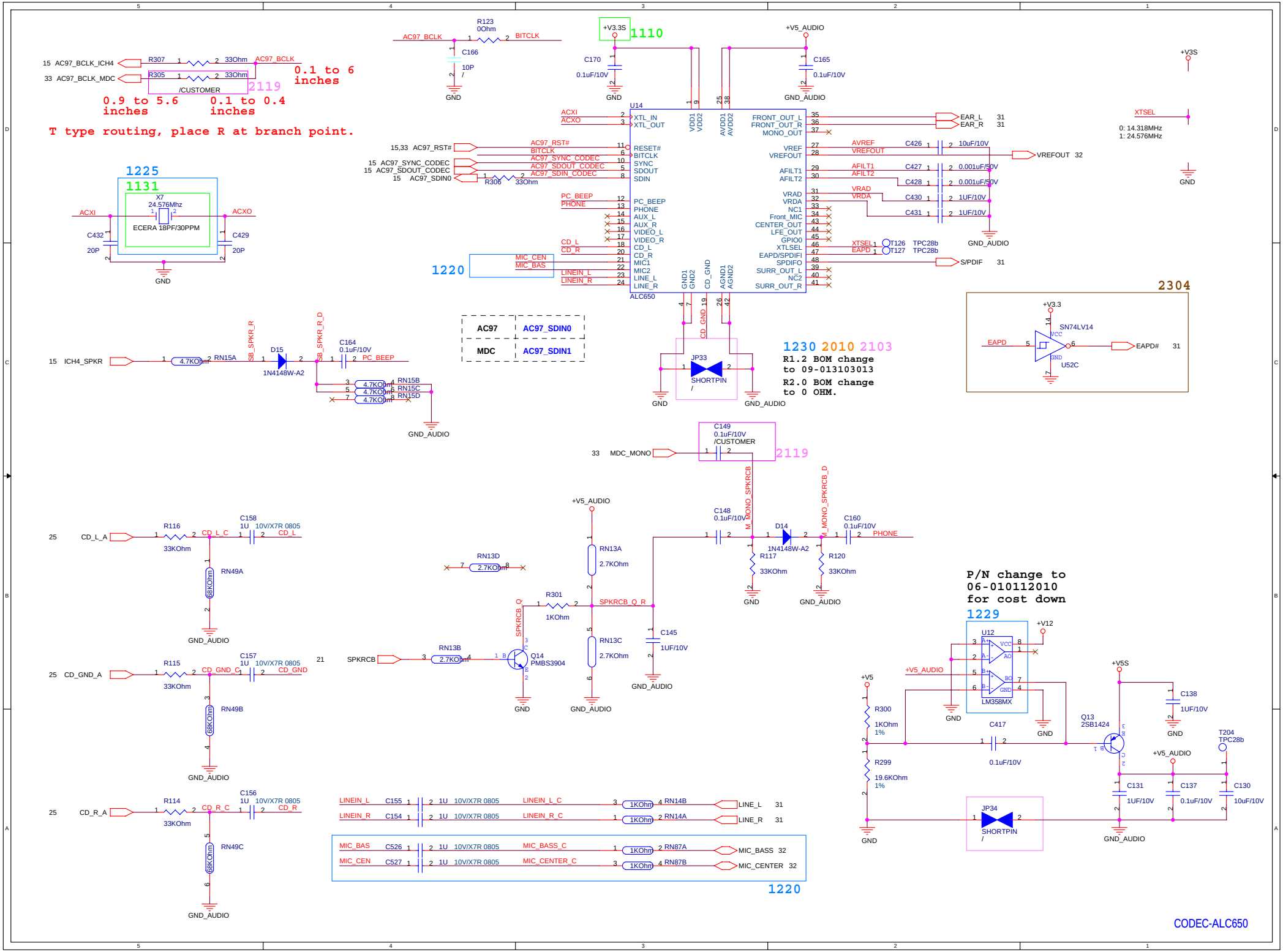
R123
0Ohm
AC97_BCLK
BITCLK
C166
10P
/
GND
+V3.3S
1110
C170
0.1uF/10V
GND
+V5_AUDIO
C165
0.1uF/10V
GND_AUDIO
+V3S
15 AC97_BCLK_ICH4
R307
33Ohm
AC97_BCLK
33 AC97_BCLK_MDC
R305
33Ohm
/CUSTOMER
2119
0.1 to 6 inches
0.9 to 5.6 inches
0.1 to 0.4 inches
T type routing, place R at branch point.
U14
ACXI
ACXO
XTL_IN
XTL_OUT
VDD1
VDD2
AVDD1
AVDD2
FRONT_OUT_L
FRONT_OUT_R
MONO_OUT
EAR_L 31
EAR_R 31
XTSEL
0: 14.318MHz
1: 24.576MHz
15,33 AC97_RST#
AC97_RST#
BITCLK
AC97_SYNC_CODEC
AC97_SDOUT_CODEC
AC97_SDIN_CODEC
RESET#
BITCLK
SYNC
SDOUT
SDIN
15 AC97_SYNC_CODEC
15 AC97_SDOUT_CODEC
15 AC97_SDIN0
R306
33Ohm
VREF
VREFOUT
AVREF
VREFOUT
C426
10uF/10V
VREFOUT 32
AFILT1
AFILT2
C427
0.001uF/50V
C428
0.001uF/50V
VRAD
VRDA
C430
1UF/10V
C431
1UF/10V
GND_AUDIO
GND
1225
1131
X7
24.576Mhz
ECERA 18PF/30PPM
ACXI
ACXO
C432
20P
C429
20P
GND
PC_BEPHONE
PC_BEEP
PHONE
AUX_L
AUX_R
VIDEO_L
VIDEO_R
CD_L
CD_R
MIC1
MIC2
LINE_L
LINE_R
CD_L
CD_R
MIC_CEN
MIC_BAS
1220
LINEIN_L
LINEIN_R
ALC650
NC1
Front_MIC
CENTER_OUT
LFE_OUT
GPIO0
XTSEL
EAPD/SPDIFI
SPDIFO
SURR_OUT_L
NC2
SURR_OUT_R
XTSEL
EAPD
T126 TPC28b
T127 TPC28b
S/PDIF 31
GND1
GND2
CD_GND
AGND1
AGND2
JP33
SHORTPIN
/
GND
GND_AUDIO
2304
+V3.3
SN74LV14
U52C
EAPD
EAPD# 31
AC97 AC97_SDIN0
MDC AC97_SDIN1
1230 2010 2103
R1.2 BOM change to 09-013103013
R2.0 BOM change to 0 OHM.
15 ICH4_SPKR
4.7KOhm
RN15A
SB_SPKR_R
D15
1N4148W-A2
SB_SPKR_R_D
C164
0.1uF/10V
PC_BEEP
RN15B
RN15C
RN15D
GND_AUDIO
33 MDC_MONO
C149
0.1uF/10V
/CUSTOMER
2119
M_MONO_SPKRCB
M_MONO_SPKRCB_D
C148
0.1uF/10V
D14
1N4148W-A2
C160
0.1uF/10V
PHONE
R117
33KOhm
R120
33KOhm
GND
GND_AUDIO
+V5_AUDIO
RN13A
2.7KOhm
RN13D
2.7KOhm
R301
1KOhm
SPKRCB_Q_R
SPKRCB_Q
RN13C
2.7KOhm
C145
1UF/10V
GND_AUDIO
21 SPKRCB
RN13B
2.7KOhm
Q14
PMBS3904
GND
GND_AUDIO
25 CD_L_A
R116
33KOhm
CD_L_C
C158
1U
10V/X7R 0805
CD_L
RN49A
68KOhm
GND_AUDIO
25 CD_GND_A
R115
33KOhm
CD_GND_C
C157
1U
10V/X7R 0805
CD_GND
RN49B
68KOhm
GND_AUDIO
25 CD_R_A
R114
33KOhm
CD_R_C
C156
1U
10V/X7R 0805
CD_R
RN49C
68KOhm
GND_AUDIO
P/N change to 06-010112010 for cost down
1229
U12
LM358MX
+V12
+V5_AUDIO
GND
C417
0.1uF/10V
+V5
R300
1KOhm
1%
R299
19.6KOhm
1%
GND
Q13
2SB1424
+V5S
C138
1UF/10V
GND
T204
TPC28b
+V5_AUDIO
C131
1UF/10V
C137
0.1uF/10V
C130
10uF/10V
JP34
SHORTPIN
/
GND_AUDIO
LINEIN_L
C155
1U
10V/X7R 0805
LINEIN_L_C
1KOhm
RN14B
LINE_L 31
LINEIN_R
C154
1U
10V/X7R 0805
LINEIN_R_C
1KOhm
RN14A
LINE_R 31
MIC_BAS
C526
1U
10V/X7R 0805
MIC_BASS_C
1KOhm
RN87A
MIC_BASS 32
MIC_CEN
C527
1U
10V/X7R 0805
MIC_CENTER_C
1KOhm
RN87B
MIC_CENTER 32
1220
CODEC-ALC650

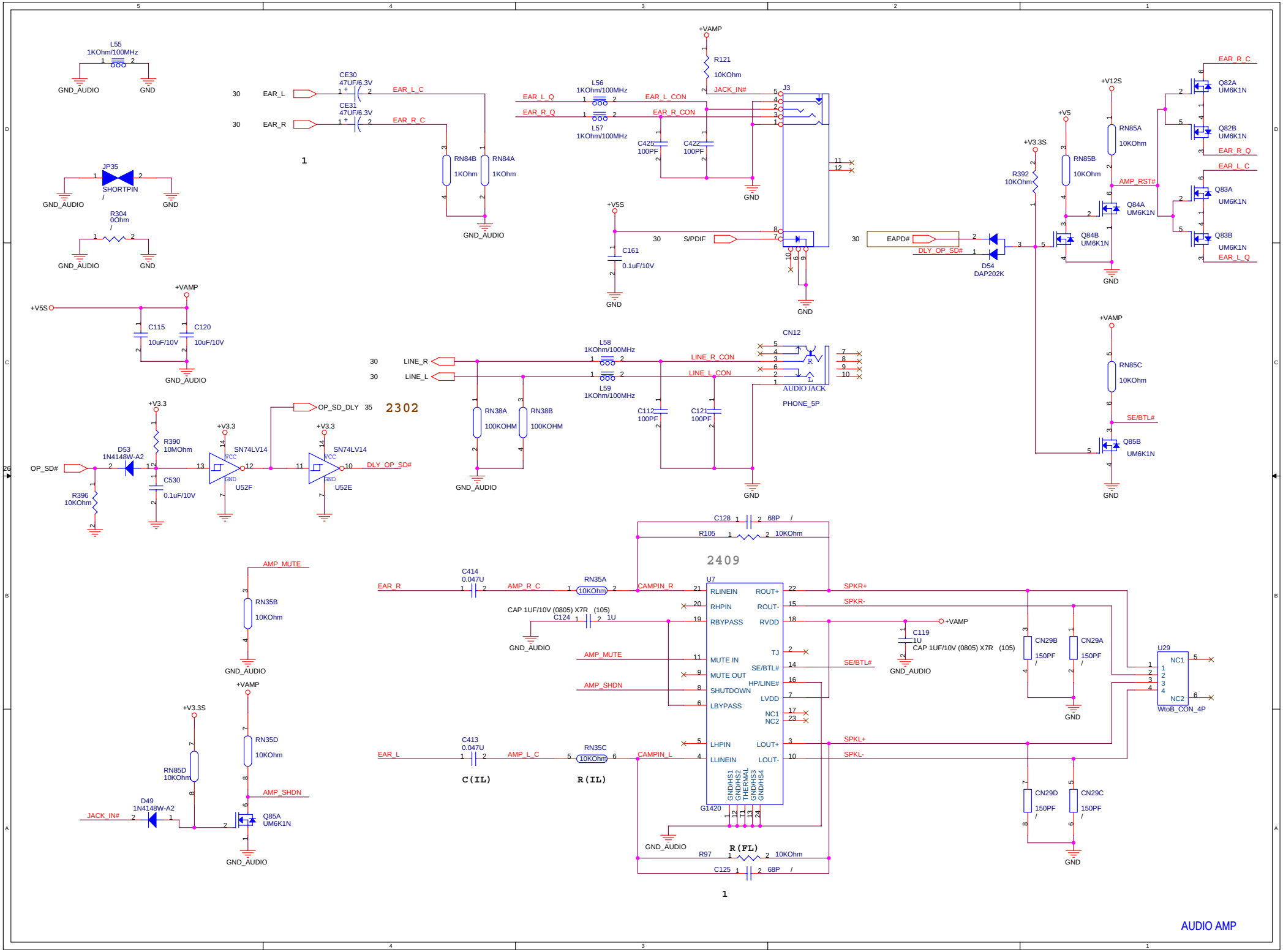
L55
1KOhm/100MHz
GND_AUDIO
GND
JP35
SHORTPIN
R304
0Ohm
EAR_L
EAR_R
CE30
47UF/6.3V
CE31
47UF/6.3V
EAR_L_C
EAR_R_C
RN84B
1KOhm
RN84A
1KOhm
+VAMP
R121
10KOhm
JACK_IN#
J3
EAR_L_Q
EAR_R_Q
L56
1KOhm/100MHz
L57
1KOhm/100MHz
EAR_L_CON
EAR_R_CON
C425
100PF
C422
100PF
+V5S
C161
0.1uF/10V
S/PDIF
+V12S
+V5
+V3.3S
RN85A
10KOhm
RN85B
10KOhm
R392
10KOhm
AMP_RST#
Q84A
UM6K1N
Q84B
UM6K1N
EAPD#
DLY_OP_SD#
D54
DAP202K
Q82A
UM6K1N
Q82B
UM6K1N
Q83A
UM6K1N
Q83B
UM6K1N
EAR_R_Q
EAR_L_C
EAR_L_Q
C115
10uF/10V
C120
10uF/10V
LINE_R
LINE_L
L58
1KOhm/100MHz
L59
1KOhm/100MHz
LINE_R_CON
LINE_L_CON
CN12
AUDIO JACK
PHONE_5P
RN38A
100KOHM
RN38B
100KOHM
C112
100PF
C121
100PF
RN85C
10KOhm
SE/BTL#
Q85B
UM6K1N
2302
OP_SD_DLY
+V3.3
R390
10MOhm
D53
1N4148W-A2
OP_SD#
R396
10KOhm
C530
0.1uF/10V
SN74LV14
U52F
U52E
DLY_OP_SD#
2409
C128
68P
R105
10KOhm
U7
EAR_R
C414
0.047U
AMP_R_C
RN35A
10KOhm
CAMPIN_R
RLINEIN
RHPIN
RBYPASS
MUTE IN
MUTE OUT
SHUTDOWN
LBYPASS
LHPIN
LLINEIN
ROUT+
ROUT-
RVDD
TJ
SE/BTL#
HP/LINE#
LVDD
NC1
NC2
LOUT+
LOUT-
GND/HS1
GND/HS2
THERMAL
GND/HS3
GND/HS4
G1420
SPKR+
SPKR-
SPKL+
SPKL-
CAP 1UF/10V (0805) X7R (105)
C124
1U
C119
1U
CAP 1UF/10V (0805) X7R (105)
AMP_MUTE
AMP_SHDN
EAR_L
C413
0.047U
AMP_L_C
RN35C
10KOhm
CAMPIN_L
C(IL)
R(IL)
R(FL)
R97
10KOhm
C125
68P
RN35B
10KOhm
RN35D
10KOhm
RN85D
10KOhm
D49
1N4148W-A2
JACK_IN#
Q85A
UM6K1N
CN29B
150PF
CN29A
150PF
CN29D
150PF
CN29C
150PF
U29
NC1
NC2
WtoB_CON_4P
AUDIO AMP

MIC JACK

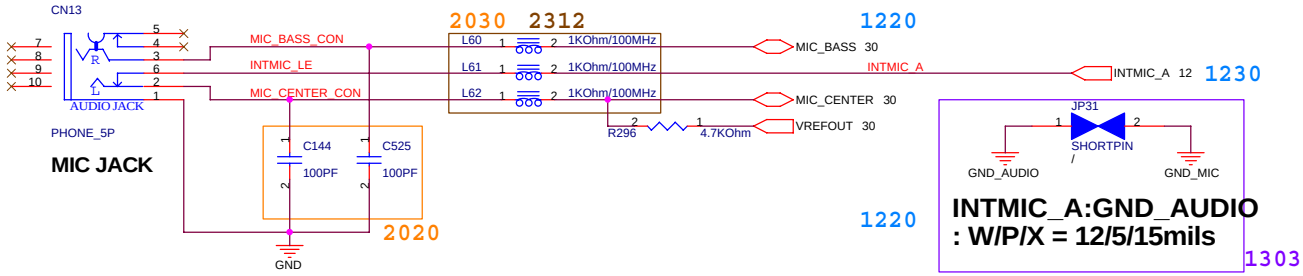
CN13
AUDIO JACK
PHONE_5P
MIC JACK
MIC_BASS_CON
INTMIC_LE
MIC_CENTER_CON
2030
2312
L60
L61
L62
1KOhm/100MHz
C144
100PF
C525
100PF
2020
GND
R296
4.7KOhm
1220
MIC_BASS 30
INTMIC_A
INTMIC_A 12
1230
MIC_CENTER 30
VREFOUT 30
JP31
SHORTPIN
GND_AUDIO
GND_MIC
1220
INTMIC_A:GND_AUDIO
: W/P/X = 12/5/15mils
1303

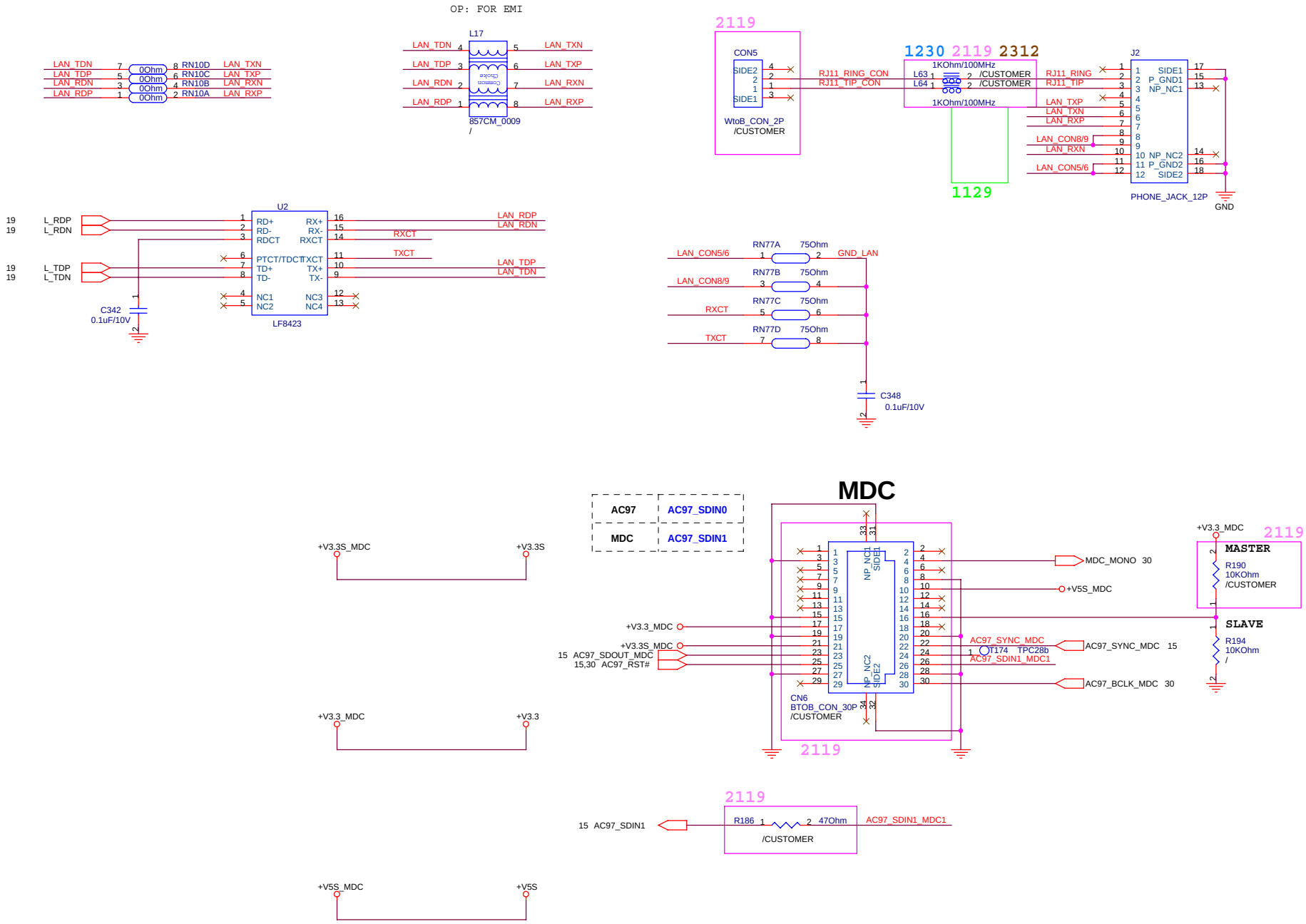
OP: FOR EMI
LAN_TDN
LAN_TDP
LAN_RDN
LAN_RDP
0Ohm
RN10D
RN10C
RN10B
RN10A
LAN_TXN
LAN_TXP
LAN_RXN
LAN_RXP
L17
857CM_0009
/
2119
CON5
SIDE2
SIDE1
WtoB_CON_2P
/CUSTOMER
RJ11_RING_CON
RJ11_TIP_CON
1230 2119 2312
1KOhm/100MHz
L63
L64
/CUSTOMER
1129
RJ11_RING
RJ11_TIP
LAN_CON8/9
LAN_CON5/6
J2
SIDE1
P_GND1
NP_NC1
NP_NC2
P_GND2
SIDE2
PHONE_JACK_12P
GND
U2
RD+
RD-
RDCT
PTCT/TDCT
TD+
TD-
NC1
NC2
RX+
RX-
RXCT
TXCT
TX+
TX-
NC3
NC4
LF8423
L_RDP
L_RDN
L_TDP
L_TDN
C342
0.1uF/10V
RN77A
RN77B
RN77C
RN77D
75Ohm
GND_LAN
C348
0.1uF/10V
MDC
AC97
AC97_SDIN0
MDC
AC97_SDIN1
+V3.3S_MDC
+V3.3S
+V3.3_MDC
+V3.3
+V5S_MDC
+V5S
+V3.3_MDC
+V3.3S_MDC
15 AC97_SDOUT_MDC
15,30 AC97_RST#
CN6
BTOB_CON_30P
/CUSTOMER
NP_NC1
SIDE1
NP_NC2
SIDE2
MDC_MONO 30
+V5S_MDC
AC97_SYNC_MDC
AC97_SDIN1_MDC1
T174 TPC28b
AC97_SYNC_MDC 15
AC97_BCLK_MDC 30
+V3.3_MDC
2119
MASTER
R190
10KOhm
/CUSTOMER
SLAVE
R194
10KOhm
/
15 AC97_SDIN1
R186
47Ohm
AC97_SDIN1_MDC1
/CUSTOMER

VPLP R:2.2 use 07-014110900 (
2nd source is 07-014110201)

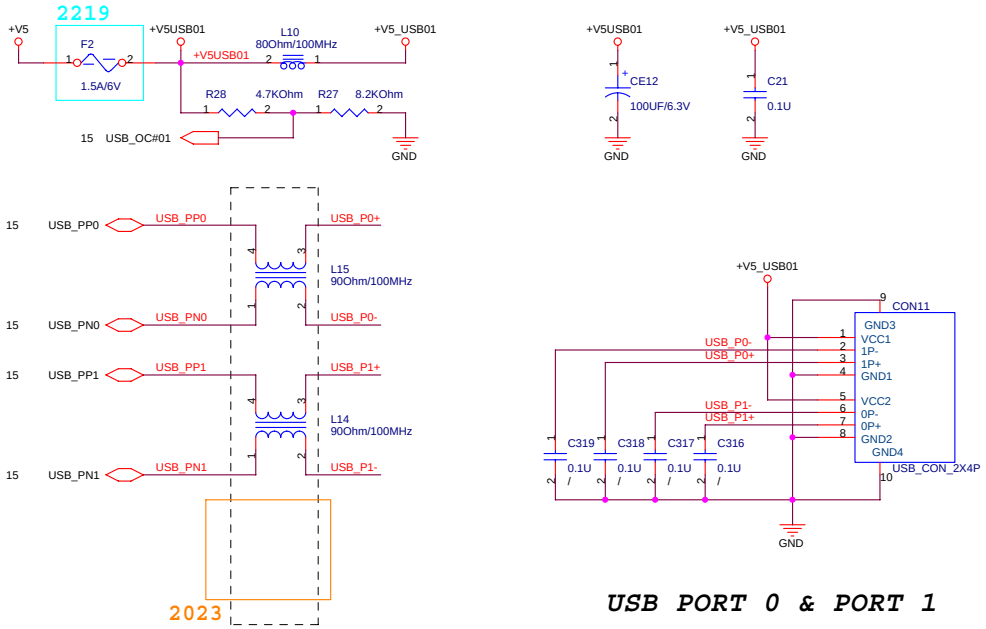

R & L Co-Lay

USB PORT 0 & PORT 1

VPLP R:2.2 use 07-014110900 (
2nd source is 07-014110201)

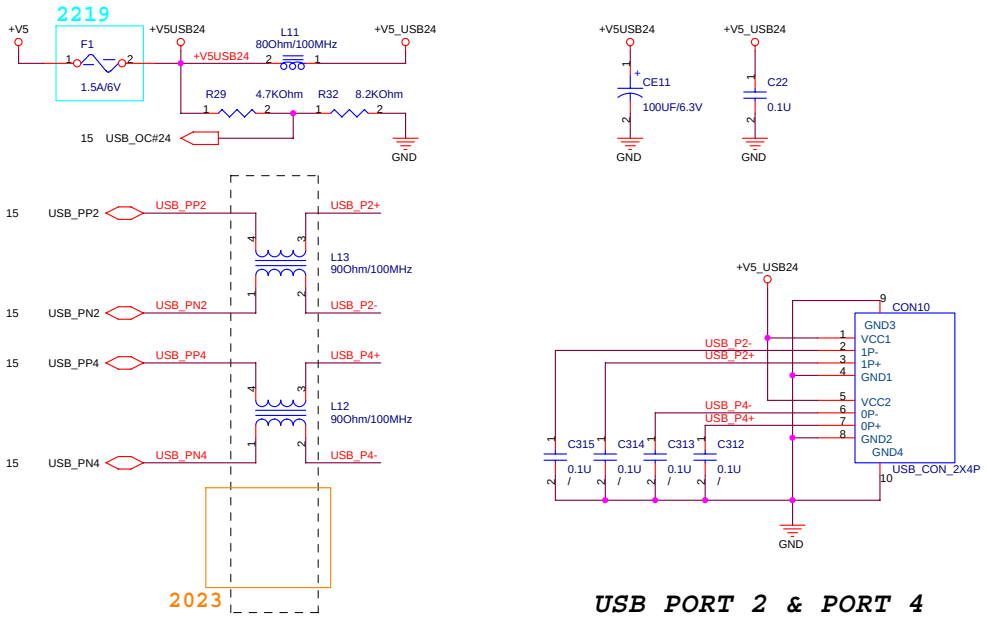

R & L Co-Lay

USB PORT 2 & PORT 4

Fan Speed Control

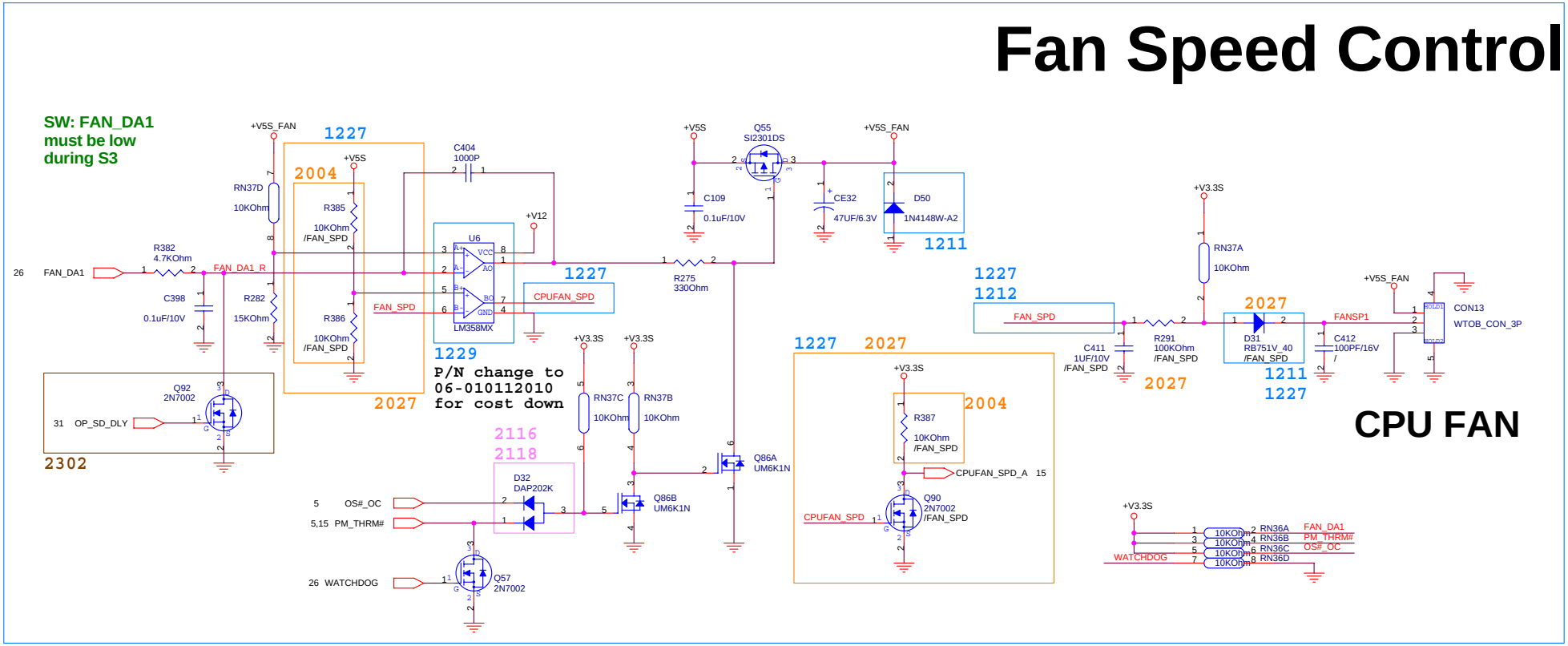

Audio DJ

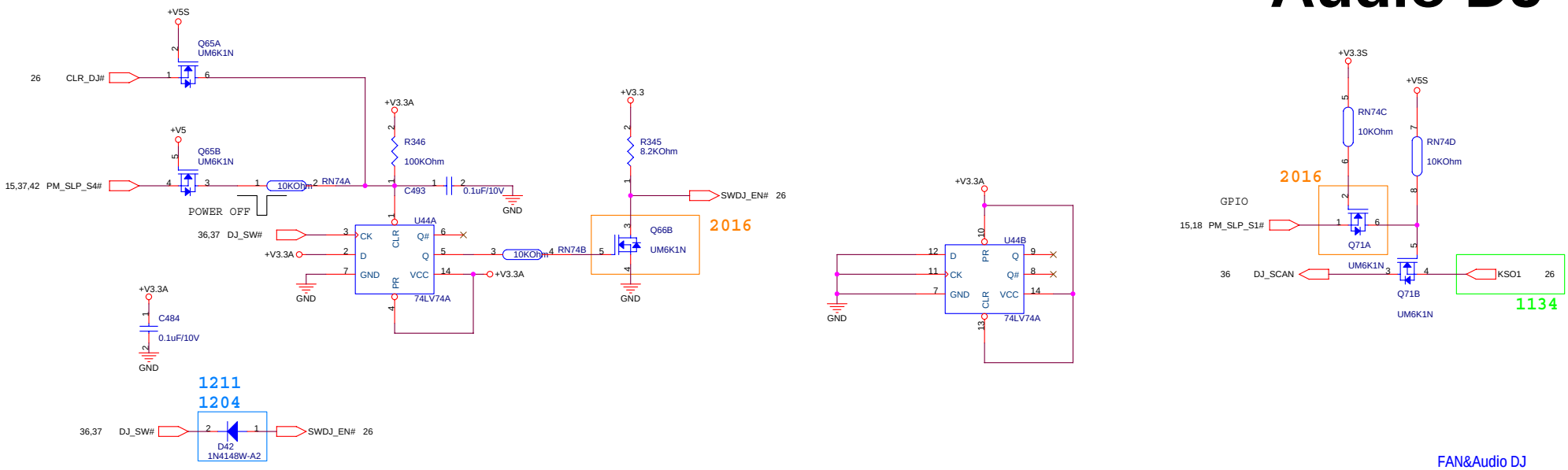

FAN&Audio DJ

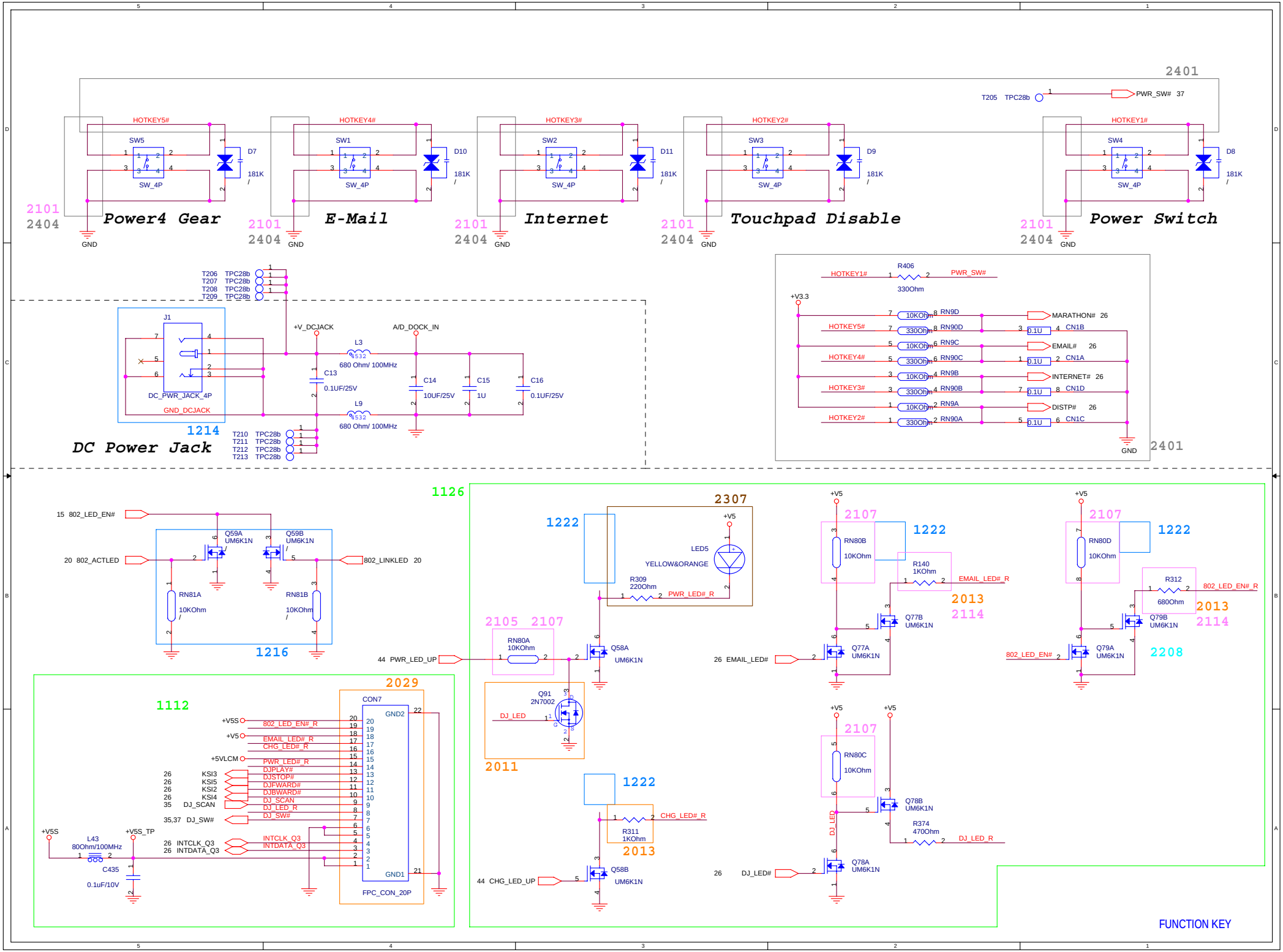
2401
T205 TPC28b
PWR_SW# 37
HOTKEY5#
HOTKEY4#
HOTKEY3#
HOTKEY2#
HOTKEY1#
SW5
SW1
SW2
SW3
SW4
SW_4P
D7
D10
D11
D9
D8
181K
2101
2404
Power4 Gear
E-Mail
Internet
Touchpad Disable
Power Switch
GND
T206 TPC28b
T207 TPC28b
T208 TPC28b
T209 TPC28b
J1
DC_PWR_JACK_4P
GND_DCJACK
1214
DC Power Jack
+V_DCJACK
A/D_DOCK_IN
L3
L9
680 Ohm/ 100MHz
C13
0.1UF/25V
C14
10UF/25V
C15
1U
C16
0.1UF/25V
T210 TPC28b
T211 TPC28b
T212 TPC28b
T213 TPC28b
R406
330Ohm
+V3.3
RN9D
RN90D
RN9C
RN90C
RN9B
RN90B
RN9A
RN90A
10KOhm
330Ohm
MARATHON# 26
CN1B
EMAIL# 26
CN1A
INTERNET# 26
CN1D
DISTP# 26
CN1C
0.1U
1126
15 802_LED_EN#
20 802_ACTLED
802_LINKLED 20
Q59A
UM6K1N
Q59B
UM6K1N
RN81A
10KOhm
RN81B
10KOhm
1216
2307
1222
LED5
YELLOW&ORANGE
R309
220Ohm
PWR_LED#_R
2105 2107
RN80A
10KOhm
Q58A
UM6K1N
44 PWR_LED_UP
Q91
2N7002
DJ_LED
2011
2107
RN80B
10KOhm
R140
1KOhm
EMAIL_LED#_R
2013
2114
Q77B
UM6K1N
Q77A
UM6K1N
26 EMAIL_LED#
RN80D
10KOhm
R312
680Ohm
802_LED_EN#_R
Q79B
UM6K1N
Q79A
UM6K1N
2208
RN80C
10KOhm
Q78B
UM6K1N
R374
470Ohm
DJ_LED_R
Q78A
UM6K1N
26 DJ_LED#
R311
1KOhm
CHG_LED#_R
Q58B
UM6K1N
44 CHG_LED_UP
1112
2029
CON7
GND2
GND1
FPC_CON_20P
+V5S
+V5
+5VLCM
802_LED_EN#_R
EMAIL_LED#_R
CHG_LED#_R
PWR_LED#_R
DJPLAY#
DJSTOP#
DJFWARD#
DJBWARD#
DJ_SCAN
DJ_LED_R
DJ_SW#
26 KSI3
26 KSI5
26 KSI2
26 KSI4
35 DJ_SCAN
35,37 DJ_SW#
26 INTCLK_Q3
26 INTDATA_Q3
INTCLK_Q3
INTDATA_Q3
+V5S_TP
L43
80Ohm/100MHz
C435
0.1uF/10V
FUNCTION KEY

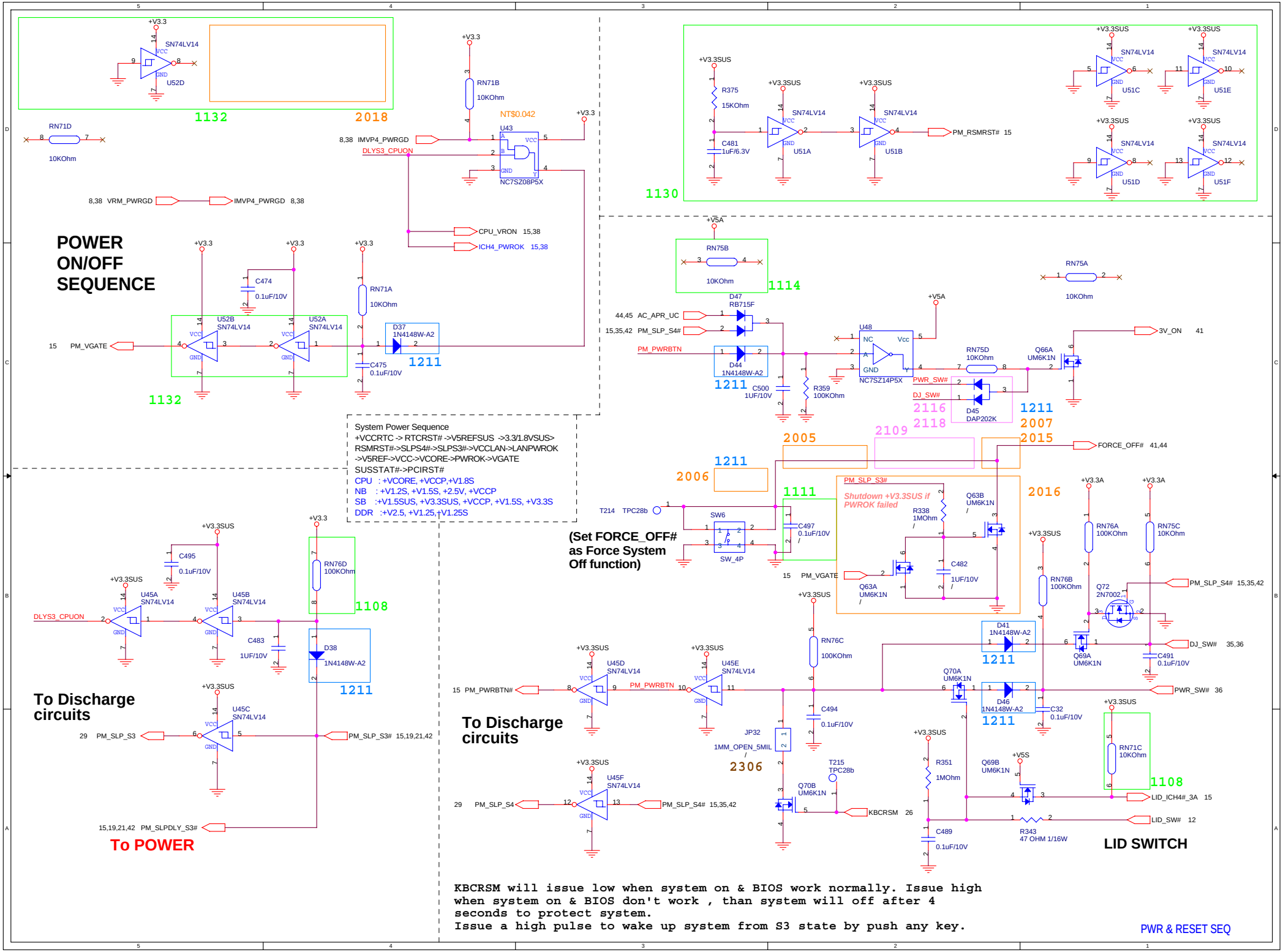
POWER ON/OFF SEQUENCE
System Power Sequence
+VCCRTC -> RTCRST# ->V5REFSUS ->3.3/1.8VSUS>
RSMRST#->SLPS4#->SLPS3#->VCCLAN->LANPWROK
->V5REF->VCC->VCORE->PWROK->VGATE
SUSSTAT#->PCIRST#
CPU : +VCORE, +VCCP,+V1.8S
NB : +V1.2S, +V1.5S, +2.5V, +VCCP
SB :+V1.5SUS, +V3.3SUS, +VCCP, +V1.5S, +V3.3S
DDR :+V2.5, +V1.25,+V1.25S
(Set FORCE_OFF# as Force System Off function)
Shutdown +V3.3SUS if PWROK failed
To Discharge circuits
To POWER
To Discharge circuits
LID SWITCH
KBCRSM will issue low when system on & BIOS work normally. Issue high when system on & BIOS don't work , than system will off after 4 seconds to protect system.
Issue a high pulse to wake up system from S3 state by push any key.
PWR & RESET SEQ

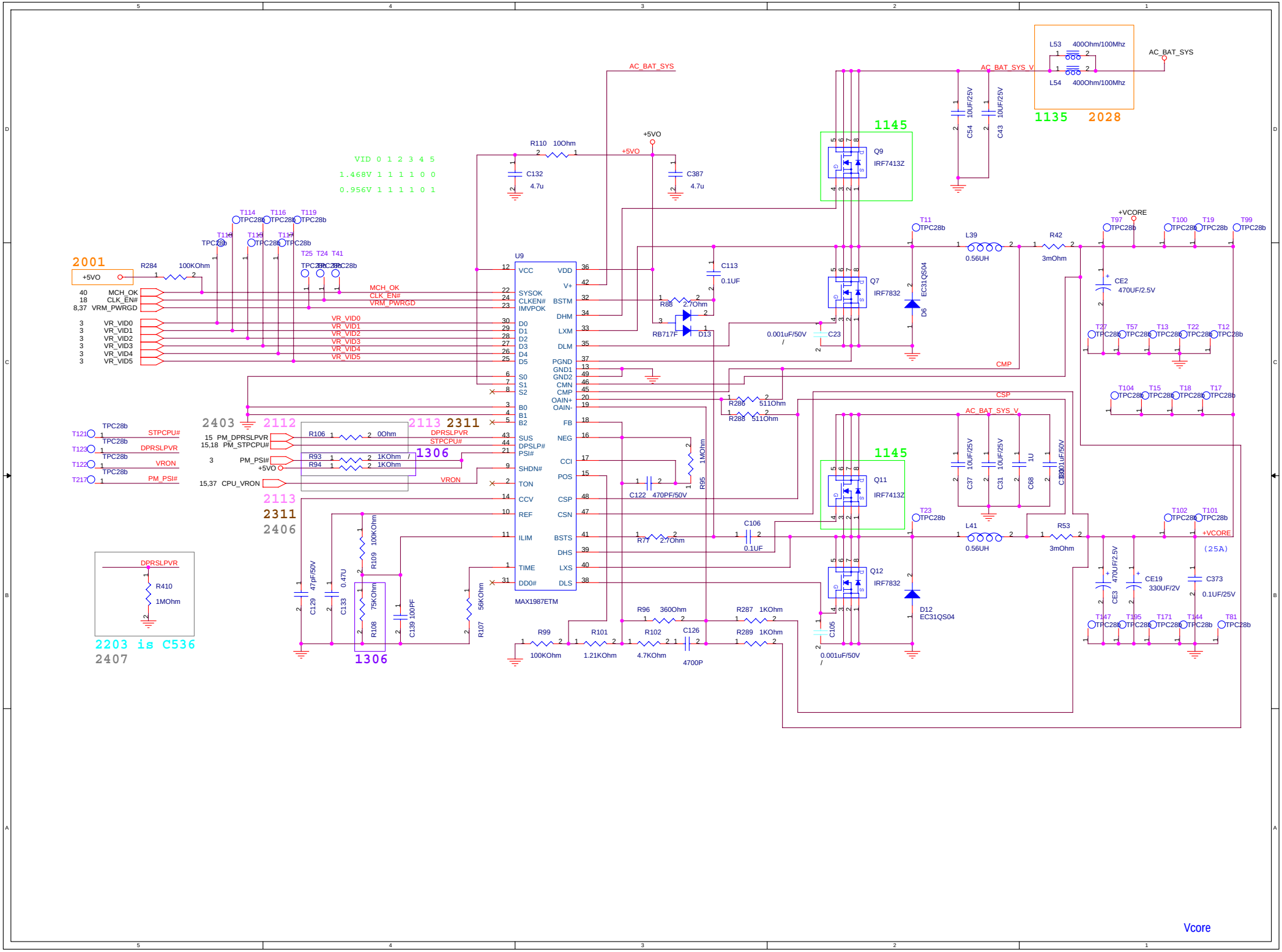
VID 0 1 2 3 4 5
1.468V 1 1 1 1 0 0
0.956V 1 1 1 1 0 1
2001
+5VO
R284 100KOhm
MCH_OK
CLK_EN#
VRM_PWRGD
VR_VID0
VR_VID1
VR_VID2
VR_VID3
VR_VID4
VR_VID5
U9
MAX1987ETM
VCC
SYSOK
CLKEN#
IMVPOK
D0
D1
D2
D3
D4
D5
S0
S1
S2
B0
B1
B2
SUS
DPSLP#
PSI#
SHDN#
TON
CCV
REF
ILIM
TIME
DD0#
VDD
V+
BSTM
DHM
LXM
DLM
PGND
GND1
GND2
CMN
CMP
OAIN+
OAIN-
FB
NEG
CCI
POS
CSP
CSN
BSTS
DHS
LXS
DLS
AC_BAT_SYS
R110 10Ohm
C132 4.7u
C387 4.7u
C113 0.1UF
R88 2.7Ohm
RB717F D13
C23 0.001uF/50V
Q9 IRF7413Z
Q7 IRF7832
Q11 IRF7413Z
Q12 IRF7832
1145
D6 EC31QS04
D12 EC31QS04
C54 10UF/25V
C43 10UF/25V
L53 400Ohm/100Mhz
L54 400Ohm/100Mhz
AC_BAT_SYS_V
1135
2028
L39 0.56UH
R42 3mOhm
L41 0.56UH
R53 3mOhm
+VCORE
CE2 470UF/2.5V
CE19 330UF/2V
C373 0.1UF/25V
(25A)
C37 10UF/25V
C31 10UF/25V
C68 1U
C 0.001uF/50V
R286 511Ohm
R288 511Ohm
CMP
CSP
R95 1MOhm
C122 470PF/50V
R77 2.7Ohm
C106 0.1UF
C105 0.001uF/50V
R96 360Ohm
R102 4.7KOhm
C126 4700P
R287 1KOhm
R289 1KOhm
R99 100KOhm
R101 1.21KOhm
2403
2112
2113 2311
1306
R106 0Ohm
R93 1KOhm
R94 1KOhm
DPRSLPVR
STPCPU#
VRON
PM_PSI#
15 PM_DPRSLPVR
15,18 PM_STPCPU#
15,37 CPU_VRON
2113
2311
2406
C129 47pF/50V
C133 0.47U
R109 100KOhm
R108 75KOhm
C139 100PF
R107 56KOhm
R410 1MOhm
2203 is C536
2407
Vcore

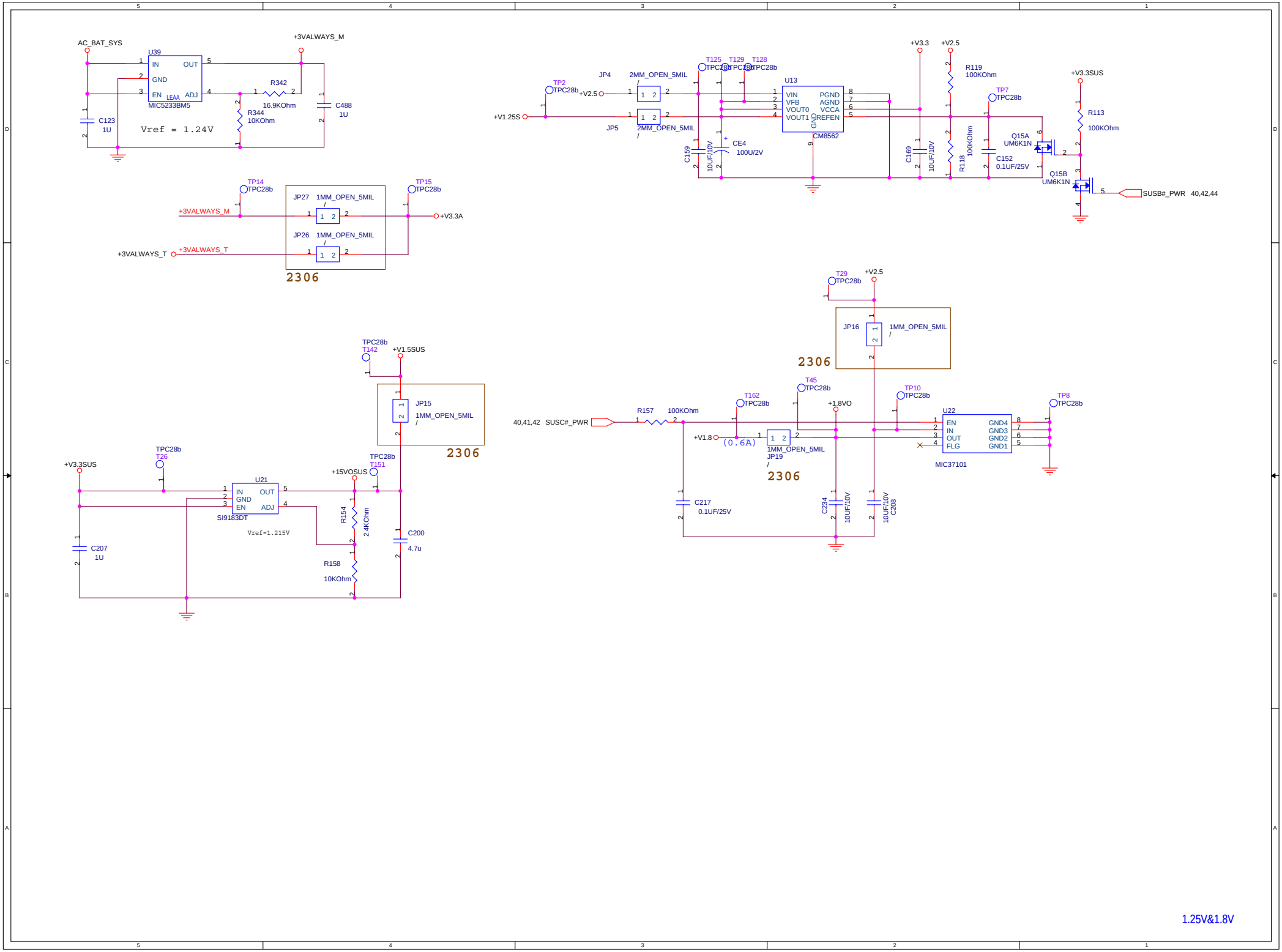
AC_BAT_SYS
+3VALWAYS_M
U39
IN
OUT
GND
EN
LEAA
ADJ
MIC5233BM5
R342
16.9KOhm
R344
10KOhm
C488
1U
C123
1U
Vref = 1.24V
TP14
TPC28b
TP15
TPC28b
JP27
1MM_OPEN_5MIL
JP26
1MM_OPEN_5MIL
+3VALWAYS_T
+3V3A
2306
+V3.3
+V2.5
R119
100KOhm
+V3.3SUS
TP2
TPC28b
JP4
2MM_OPEN_5MIL
JP5
2MM_OPEN_5MIL
+V1.25S
T125
T129
T128
TPC28b
U13
VIN
VFB
VOUT0
VOUT1
PGND
AGND
VCCA
VREFEN
CM8562
TP7
TPC28b
R113
100KOhm
C159
10UF/10V
CE4
100U/2V
C169
10UF/10V
R118
100KOhm
C152
0.1UF/25V
Q15A
UM6K1N
Q15B
UM6K1N
SUSB#_PWR
40,42,44
TPC28b
T142
+V1.5SUS
JP15
1MM_OPEN_5MIL
2306
TPC28b
T26
+V3.3SUS
U21
IN
OUT
GND
EN
ADJ
SI9183DT
Vref=1.215V
+15VOSUS
TPC28b
T151
R154
2.4KOhm
R158
10KOhm
C207
1U
C200
4.7u
T29
TPC28b
+V2.5
JP16
1MM_OPEN_5MIL
2306
T45
TPC28b
T162
TPC28b
TP10
TPC28b
TP8
TPC28b
40,41,42
SUSC#_PWR
R157
100KOhm
+1.8V
+V1.8
(0.6A)
JP19
1MM_OPEN_5MIL
2306
U22
EN
IN
OUT
FLG
GND4
GND3
GND2
GND1
MIC37101
C217
0.1UF/25V
C234
10UF/10V
10UF/10V
C208
1.25V&1.8V

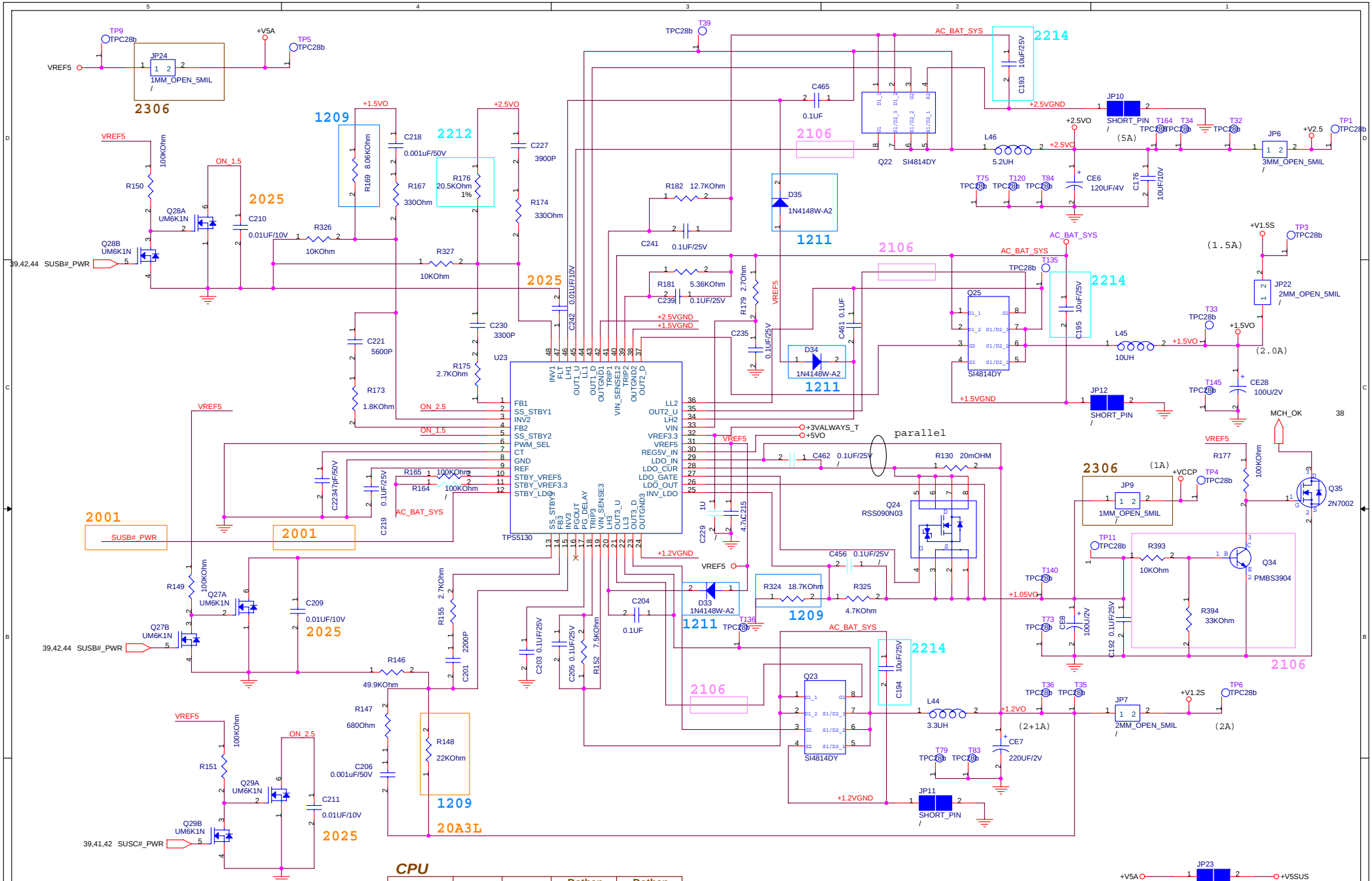

CPU

	Celeron	Banias	Dothan (400)	Dothan (533)
Frequency	100	100	100	133
VCCA[1:3]	1.8V	1.8V	1.8V	NC
VCCA[0]	1.8V	1.8V	1.8V	1.5V
U54 switch to	Pin 3,4			Pin 1,2

2.5V&1.5V&1.2V&1.05V

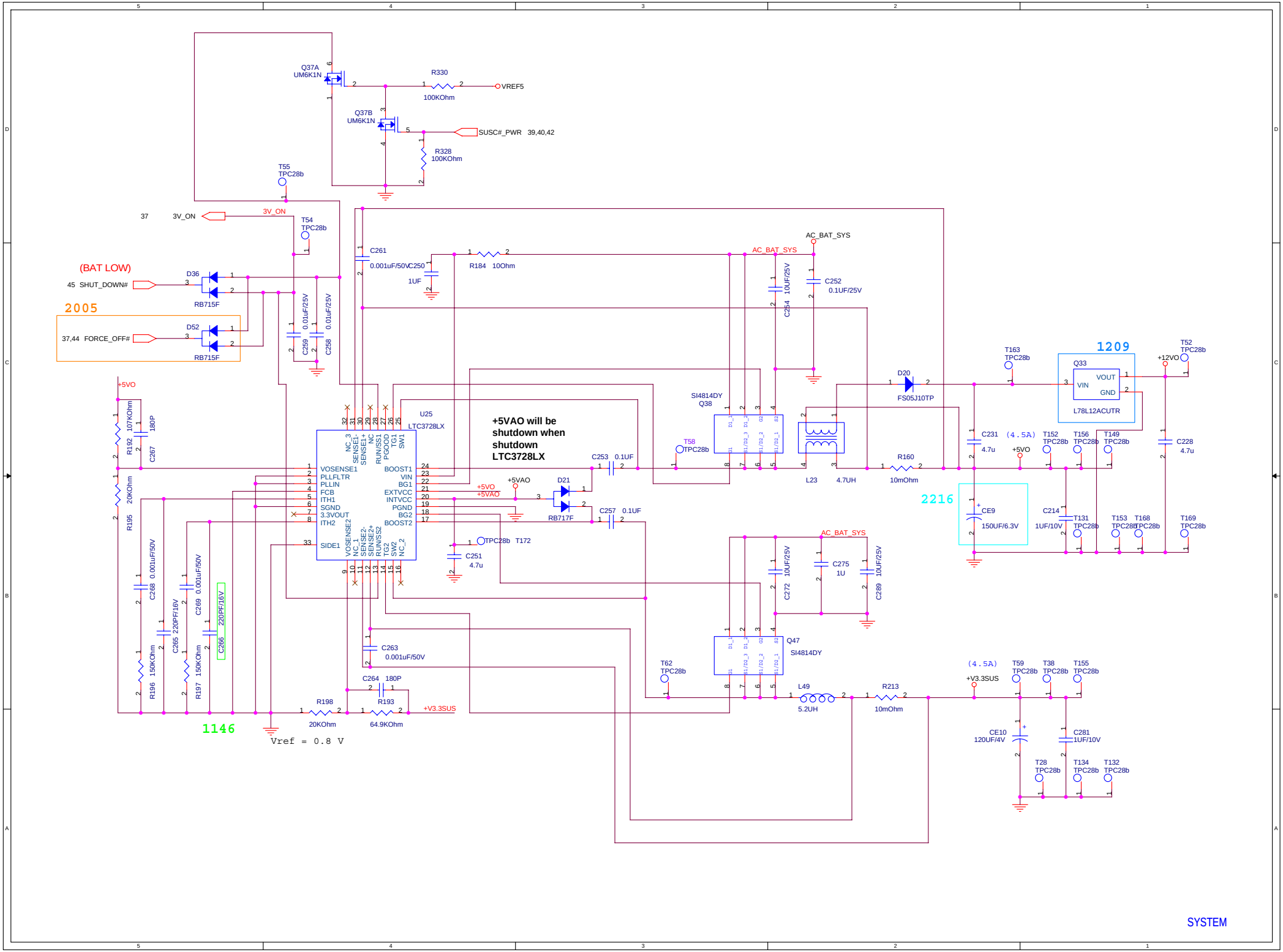
Q37A
UM6K1N
R330
100KOhm
VREF5
Q37B
UM6K1N
SUSC#_PWR 39,40,42
R328
100KOhm
T55
TPC28b
37 3V_ON
3V_ON
T54
TPC28b
(BAT LOW)
45 SHUT_DOWN#
D36
RB715F
2005
37,44 FORCE_OFF#
D52
RB715F
C261
0.001uF/50V
C250
1UF
R184 10Ohm
C259 0.01uF/25V
C258 0.01uF/25V
AC_BAT_SYS
C254 10UF/25V
C252
0.1UF/25V
+5VO
R192 107KOhm
C267 180P
R195 20KOhm
U25
LTC3728LX
VOSENSE1
PLLFLTR
PLLIN
FCB
ITH1
SGND
3.3VOUT
ITH2
SIDE1
NC_3
SENSE1-
SENSE1+
NC
RUN/SS1
PGOOD
TG1
SW1
BOOST1
VIN
BG1
EXTVCC
INTVCC
PGND
BG2
BOOST2
VOSENSE2
NC_1
SENSE2-
SENSE2+
RUN/SS2
TG2
SW2
NC_2
+5VAO will be shutdown when shutdown LTC3728LX
C253 0.1UF
+5VO
+5VAO
+5VAO
D21
RB717F
C257 0.1UF
TPC28b T172
C251
4.7u
SI4814DY
Q38
T58
TPC28b
L23 4.7UH
R160 10mOhm
D20
FS05J10TP
T163
TPC28b
1209
Q33
VOUT
VIN
GND
L78L12ACUTR
T52
TPC28b
+12VO
C231 4.7u
(4.5A)
+5VO
T152 TPC28b
T156 TPC28b
T149 TPC28b
C228 4.7u
2216
CE9
150UF/6.3V
C214
1UF/10V
T131 TPC28b
T153 TPC28b
T168 TPC28b
T169 TPC28b
C268 0.001uF/50V
C265 220PF/16V
C269 0.001uF/50V
C266 220PF/16V
R196 150KOhm
R197 150KOhm
C263
0.001uF/50V
C264 180P
R198
20KOhm
R193
64.9KOhm
+V3.3SUS
1146
Vref = 0.8 V
C272 10UF/25V
C275
1U
C289 10UF/25V
Q47
SI4814DY
T62
TPC28b
L49
5.2UH
R213
10mOhm
(4.5A)
+V3.3SUS
T59 TPC28b
T38 TPC28b
T155 TPC28b
CE10
120UF/4V
C281
1UF/10V
T28 TPC28b
T134 TPC28b
T132 TPC28b
SYSTEM

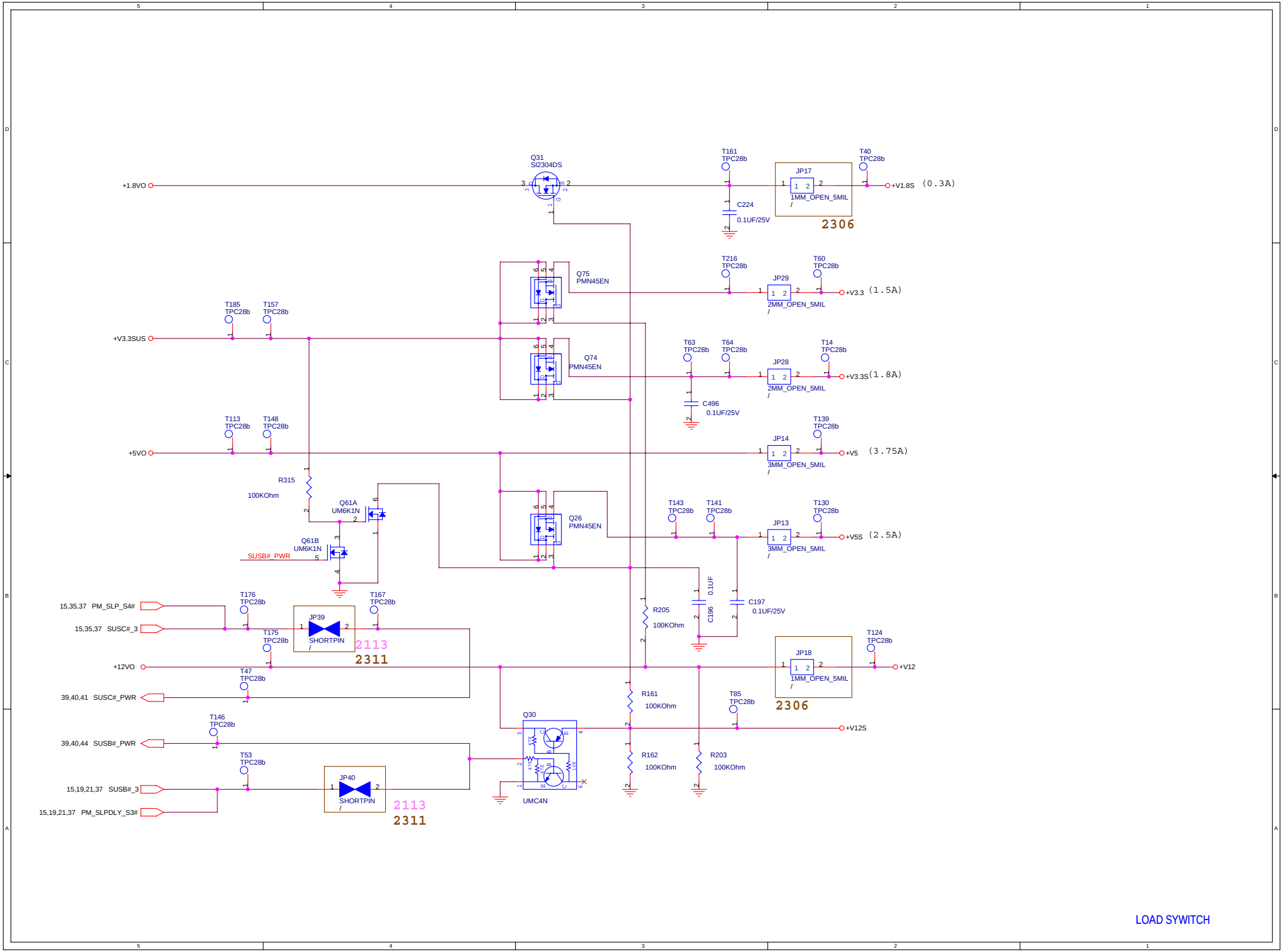
+1.8VO
Q31
SI2304DS
T161
TPC28b
T40
TPC28b
JP17
1MM_OPEN_5MIL
+V1.8S
(0.3A)
C224
0.1UF/25V
2306
T216
TPC28b
T60
TPC28b
JP29
2MM_OPEN_5MIL
+V3.3
(1.5A)
Q75
PMN45EN
T185
TPC28b
T157
TPC28b
+V3.3SUS
Q74
PMN45EN
T63
TPC28b
T64
TPC28b
T14
TPC28b
JP28
2MM_OPEN_5MIL
+V3.3S
(1.8A)
C496
0.1UF/25V
T113
TPC28b
T148
TPC28b
T139
TPC28b
JP14
3MM_OPEN_5MIL
+5VO
+V5
(3.75A)
R315
100KOhm
Q61A
UM6K1N
Q61B
UM6K1N
SUSB#_PWR
Q26
PMN45EN
T143
TPC28b
T141
TPC28b
T130
TPC28b
JP13
3MM_OPEN_5MIL
+V5S
(2.5A)
C196
0.1UF
C197
0.1UF/25V
R205
100KOhm
15,35,37 PM_SLP_S4#
15,35,37 SUSC#_3
T176
TPC28b
T167
TPC28b
T175
TPC28b
JP39
SHORTPIN
2113
2311
+12VO
T47
TPC28b
39,40,41 SUSC#_PWR
T124
TPC28b
JP18
1MM_OPEN_5MIL
+V12
2306
R161
100KOhm
T85
TPC28b
+V12S
Q30
UMC4N
T146
TPC28b
39,40,44 SUSB#_PWR
T53
TPC28b
15,19,21,37 SUSB#_3
15,19,21,37 PM_SLPDLY_S3#
JP40
SHORTPIN
2113
2311
R162
100KOhm
R203
100KOhm
LOAD SYWITCH

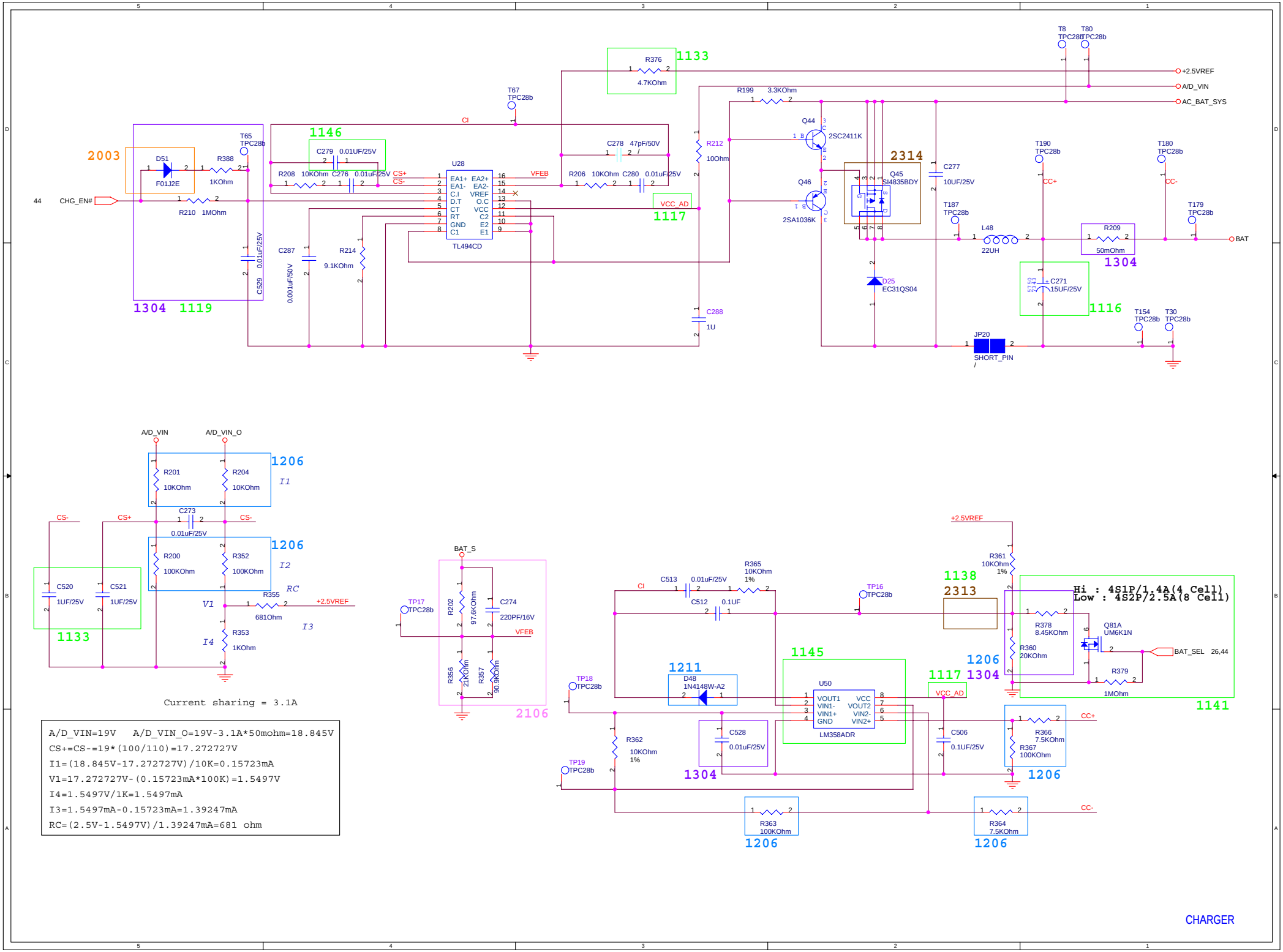

Current sharing = 3.1A

A/D_VIN=19V A/D_VIN_O=19V-3.1A*50mohm=18.845V
CS+=CS-=19*(100/110)=17.272727V
I1=(18.845V-17.272727V)/10K=0.15723mA
V1=17.272727V-(0.15723mA*100K)=1.5497V
I4=1.5497V/1K=1.5497mA
I3=1.5497mA-0.15723mA=1.39247mA
RC=(2.5V-1.5497V)/1.39247mA=681 ohm

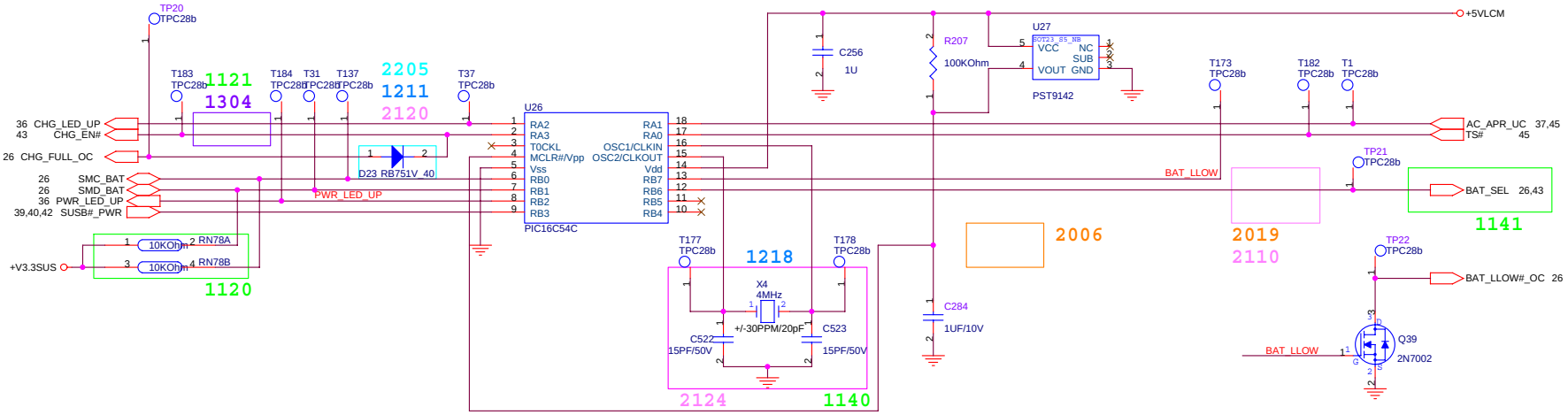
TP20
TPC28b
T183
TPC28b
1121
1304
T184
TPC28b
T31
TPC28b
T137
TPC28b
2205
1211
2120
T37
TPC28b
36 CHG_LED_UP
43 CHG_EN#
26 CHG_FULL_OC
26 SMC_BAT
26 SMD_BAT
36 PWR_LED_UP
39,40,42 SUSB#_PWR
D23 RB751V_40
PWR_LED_UP
10KOhm
RN78A
RN78B
+V3.3SUS
1120
U26
RA2
RA3
T0CKL
MCLR#/Vpp
Vss
RB0
RB1
RB2
RB3
RA1
RA0
OSC1/CLKIN
OSC2/CLKOUT
Vdd
RB7
RB6
RB5
RB4
PIC16C54C
C256
1U
R207
100KOhm
U27
VCC
NC
SUB
VOUT
GND
PST9142
+5VLCM
T173
TPC28b
T182
TPC28b
T1
TPC28b
AC_APR_UC 37,45
TS# 45
BAT_LLOW
TP21
TPC28b
BAT_SEL 26,43
1141
2006
2019
2110
TP22
TPC28b
BAT_LLOW#_OC 26
Q39
2N7002
BAT_LLOW
T177
TPC28b
1218
T178
TPC28b
X4
4MHz
+/-30PPM/20pF
C522
15PF/50V
C523
15PF/50V
2124
1140
C284
1UF/10V

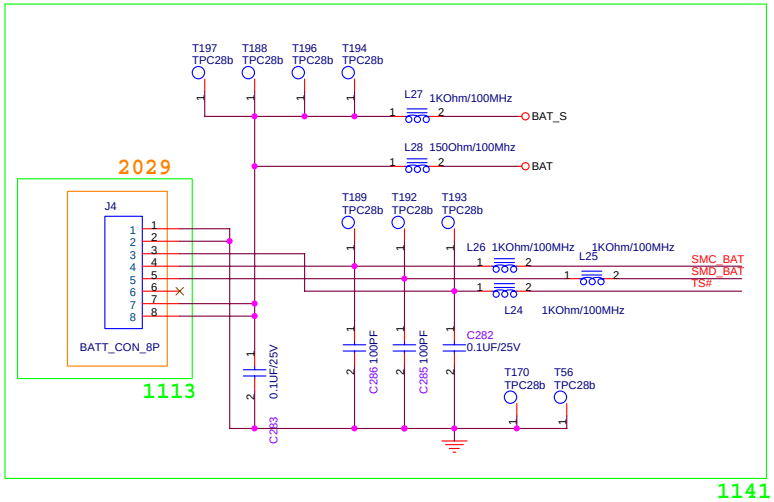
T197
TPC28b
T188
TPC28b
T196
TPC28b
T194
TPC28b
L27 1KOhm/100MHz
BAT_S
L28 150Ohm/100Mhz
BAT
2029
J4
BATT_CON_8P
1113
T189
TPC28b
T192
TPC28b
T193
TPC28b
L26 1KOhm/100MHz
L25 1KOhm/100MHz
L24 1KOhm/100MHz
SMC_BAT
SMD_BAT
TS#
C283 0.1UF/25V
C286 100PF
C285 100PF
C282
0.1UF/25V
T170
TPC28b
T56
TPC28b
1141

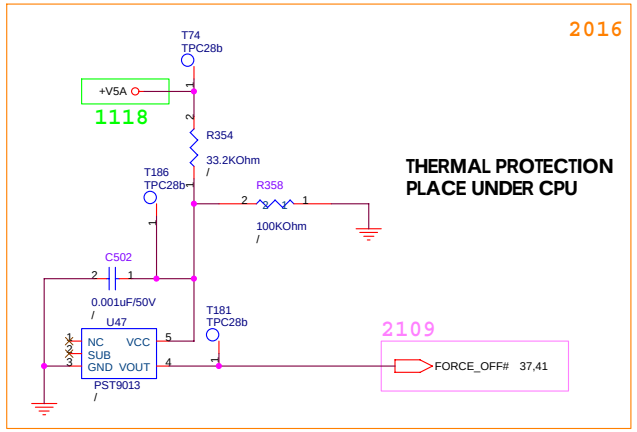
2016
T74
TPC28b
+V5A
1118
R354
33.2KOhm
/
T186
TPC28b
R358
100KOhm
/
THERMAL PROTECTION
PLACE UNDER CPU
C502
0.001uF/50V
/
U47
NC
SUB
GND
VCC
VOUT
PST9013
/
T181
TPC28b
2109
FORCE_OFF# 37,41

PIC16C54

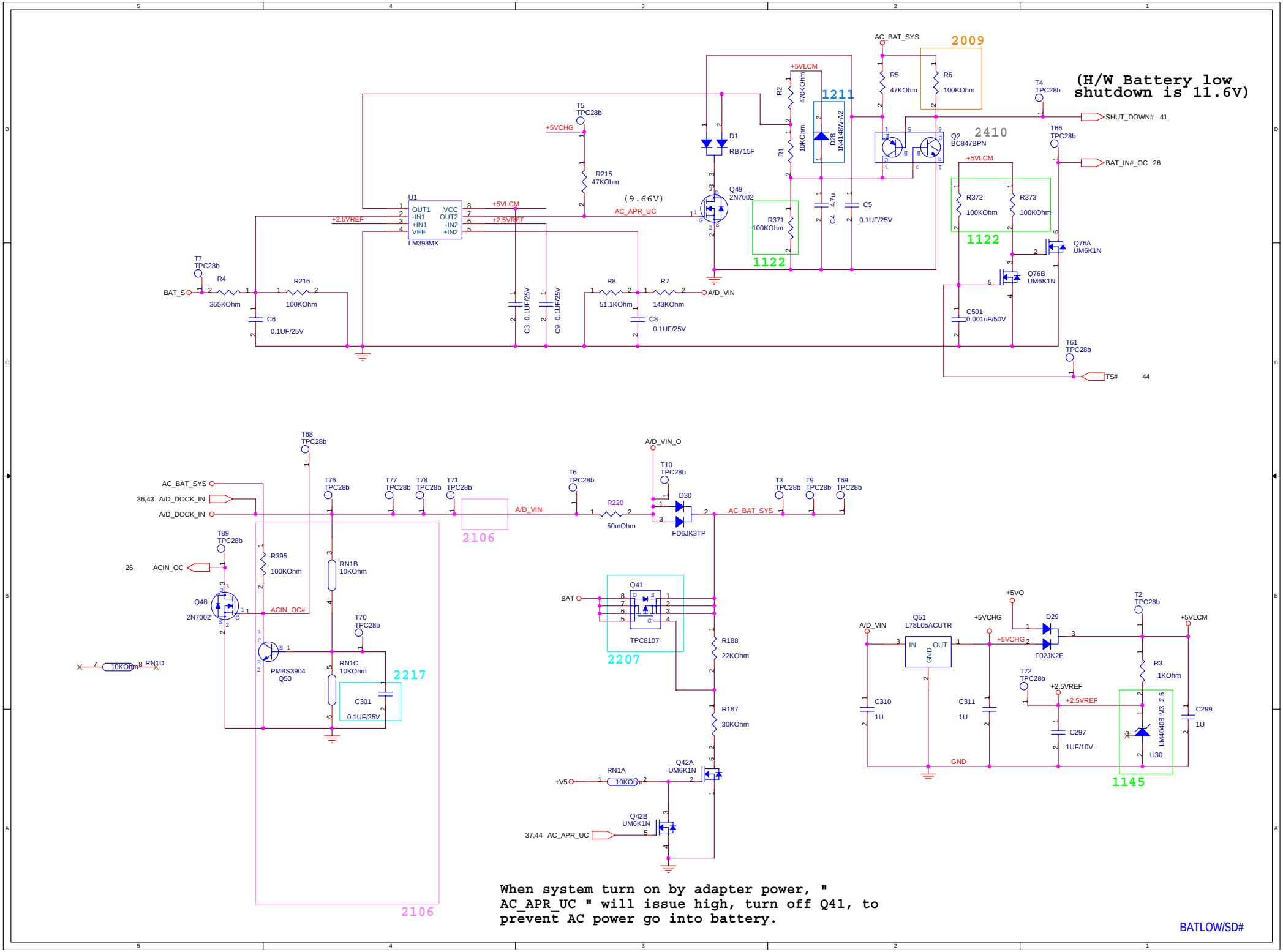
(H/W Battery low shutdown is 11.6V)
When system turn on by adapter power, " AC_APR_UC " will issue high, turn off Q41, to prevent AC power go into battery.
BATLOW/SD#
AC_BAT_SYS
2009
R5 47KOhm
R6 100KOhm
T4 TPC28b
SHUT_DOWN# 41
T66 TPC28b
BAT_IN#_OC 26
Q2 BC847BPN
2410
+5VLCM
R2 470KOhm
R1 10KOhm
1211
D28 1N4148W-A2
C4 4.7u
C5 0.1UF/25V
R371 100KOhm
1122
R372 100KOhm
R373 100KOhm
Q76A UM6K1N
Q76B UM6K1N
C501 0.001uF/50V
T61 TPC28b
TS# 44
T5 TPC28b
+5VCHG
R215 47KOhm
D1 RB715F
Q49 2N7002
(9.66V)
AC_APR_UC
U1
OUT1 VCC
-IN1 OUT2
+IN1 -IN2
VEE +IN2
LM393MX
+2.5VREF
T7 TPC28b
BAT_S
R4 365KOhm
R216 100KOhm
C6 0.1UF/25V
C3 0.1UF/25V
C9 0.1UF/25V
R8 51.1KOhm
R7 143KOhm
C8 0.1UF/25V
A/D_VIN
T68 TPC28b
AC_BAT_SYS
36,43 A/D_DOCK_IN
A/D_DOCK_IN
T76 TPC28b
T77 TPC28b
T78 TPC28b
T71 TPC28b
2106
A/D_VIN
T6 TPC28b
R220 50mOhm
A/D_VIN_O
T10 TPC28b
D30 FD6JK3TP
AC_BAT_SYS
T3 TPC28b
T9 TPC28b
T69 TPC28b
T89 TPC28b
26 ACIN_OC
R395 100KOhm
Q48 2N7002
ACIN_OC#
RN1B 10KOhm
T70 TPC28b
PMBS3904 Q50
RN1C 10KOhm
2217
C301 0.1UF/25V
7 10KOhm 8 RN1D
BAT
Q41 TPC8107
2207
R188 22KOhm
R187 30KOhm
+V5
RN1A 10KOhm
Q42A UM6K1N
Q42B UM6K1N
37,44 AC_APR_UC
2106
A/D_VIN
Q51 L78L05ACUTR
IN OUT
GND
+5VO
+5VCHG
D29 F02JK2E
T2 TPC28b
+5VLCM
R3 1KOhm
T72 TPC28b
+2.5VREF
C310 1U
C311 1U
C297 1UF/10V
C299 1U
LM4040BIM3_2.5
U30
1145
GND

SCREW HOLE

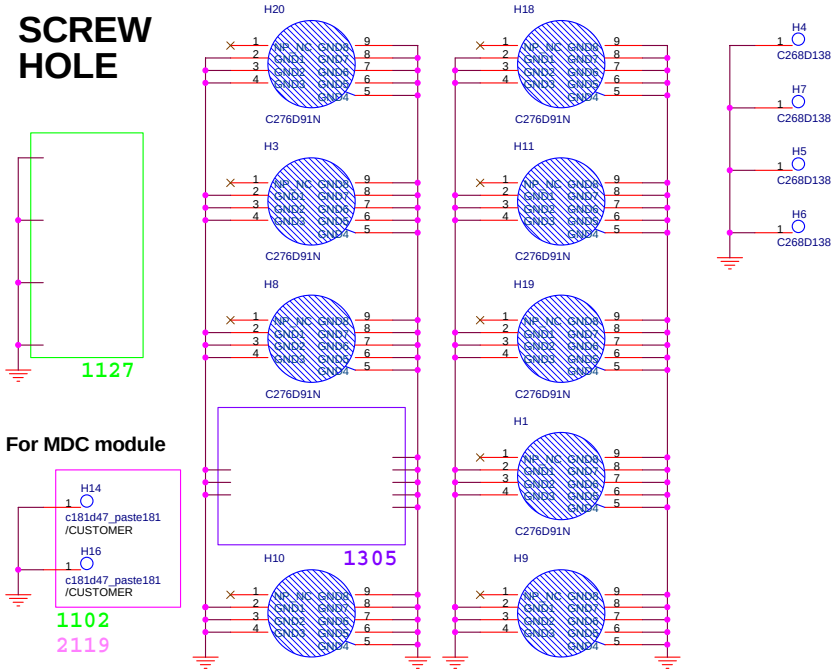

EMI

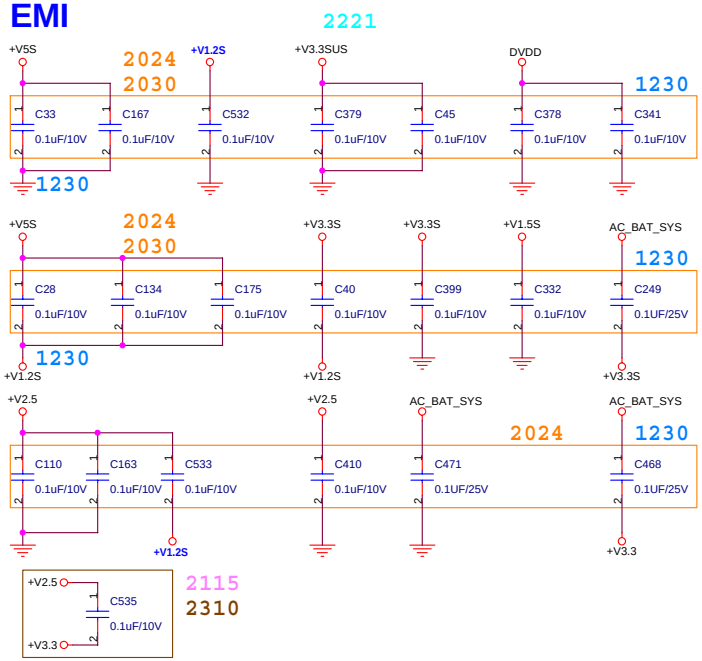


```
Short Pad location:
Page37: JP32
Page39: JP4,5,15,16,19,26,27
Page40: JP6,7,9,22,24
Page42: JP13,14,17,18,28,29
Don't Short Pad: JP26
JP4:+V2.5 --Power In
JP5:+V1.25S
JP6:+V2.5
JP7:+V1.2S
JP9:+VCCP
JP13:+V5S
JP14:+V5
JP15:+V1.5SUS
JP16:+V2.5 --Power IN
JP17:+V1.8S
JP18:+V12
JP19:+V1.8
JP22:+V1.5S
JP24: VREF5-->+V5A
JP26:+3VALWAYS_T-->+V3.3A(open)
JP27:+3VALWAYS_M-->+V3.3A(short)
JP28:+V3.3S
JP29:+V3.3
JP32:KBCRSM
```

PCB STACK-UP

PCB THICKNESS: 1.6 mm

L1 TOP
L2 VCC
L3 GND
L4 BOT

IMPEDENCE

Single-Ended

27.4 OHM	WIDTH
TOP/BOT	20 mils

37.5 OHM	WIDTH
TOP/BOT	12 mils

42 OHM	WIDTH
TOP/BOT	10 mils

55 OHM	WIDTH
TOP/BOT	5 mils

Differential

70 OHM	WIDTH/SPACE
TOP/BOT	9 mils/ 5 mils

90 OHM	WIDTH/SPACE
TOP/BOT	7 mils/ 10 mils

100 OHM	WIDTH/SPACE
TOP/BOT	5 mils/ 7 mils

PCI INTERFACE

PCI_REQ#

CB&1394	PCI_REQ#0
MINIPCI	PCI_REQ#1
LAN	PCI_REQ#2

PCI_GNT#

CB&1394	PCI_REQ#0
MINIPCI	PCI_REQ#1
LAN	PCI_REQ#2

IDSEL

CB&1394	PCI_AD21
MINIPCI	PCI_AD20
LAN	PCI_AD16

PCI_INT#

CB&1394	PCI_INTB/A/D#
MINIPCI	PCI_INTC/D#
LAN	PCI_INTC#

POWER INTERFACE

SIGNALS	TYPE	POWER
CLK_EN#	I	+V3.3S_CLK
PM_PSI#	O	+VCCP
VR_VID[5:0]	O	+VCCP
CPU_VRON	O	+V3.3SUS
VRM_PWRGD	I	+V3.3S
PM_STPCPU#	O	+V3.3S
CHG_LED	I	+5VLCM
RST_BTN#	O	OD
OTP_RESET#	I	+V5
SHUT_DOWN#	I	AC_BAT_SYS
+5VLCM	PWR	+V5
PM_SLPDLY_S3#	O	+V3.3
PM_SLP_S4#	O	+V3.3SUS
BAT_LEARN	I	+V3.3
BAT_LLOW#_OC	I	+V3.3
BAT_IN#_OC	I	+V3.3
ACIN_OC	I	+V3.3
CHG_FULL_OC	I	+V3.3
PM_DPRSLPVR	O	+V3.3S
AC_APR_UC	I	+V5A
+V5A	PWR	VREF5
3V_ON	O	OD
AC_BAT_SYS	PWR	DC
A/D_DOCK_IN	PWR	DC
SMC_BAT	IO	+V3.3
SMD_BAT	IO	+V3.3

POWER PLANE

POWER	VOLTAGE	CURRENT
+VCORE	1.46V	25A
+VCCP	1.05V	2.4A(Max),1A(Real)
+V1.2S	1.2V	2.5A
+V1.25S	1.25V	0.5A
+V1.5S	1.5V	1.32A
+V1.5SUS	1.5V	64 mA
+V1.8	1.8V	0.14A
+V1.8S	1.8V	0.3 A
+V2.5	2.5V	6.68A
+V3.3S	3.3V	1.732A
+V3.3	3.3V	1.515A
+V3.3SUS	3.3V	14 mA
+V5S	5V	2.5A
+V5	5V	3.75A
+V5SUS	5V	0.5A
+V12	12V	0.25A
+V12S	12V	0.25A

SCREW HOLE

5E BLOCK DIAGRAM

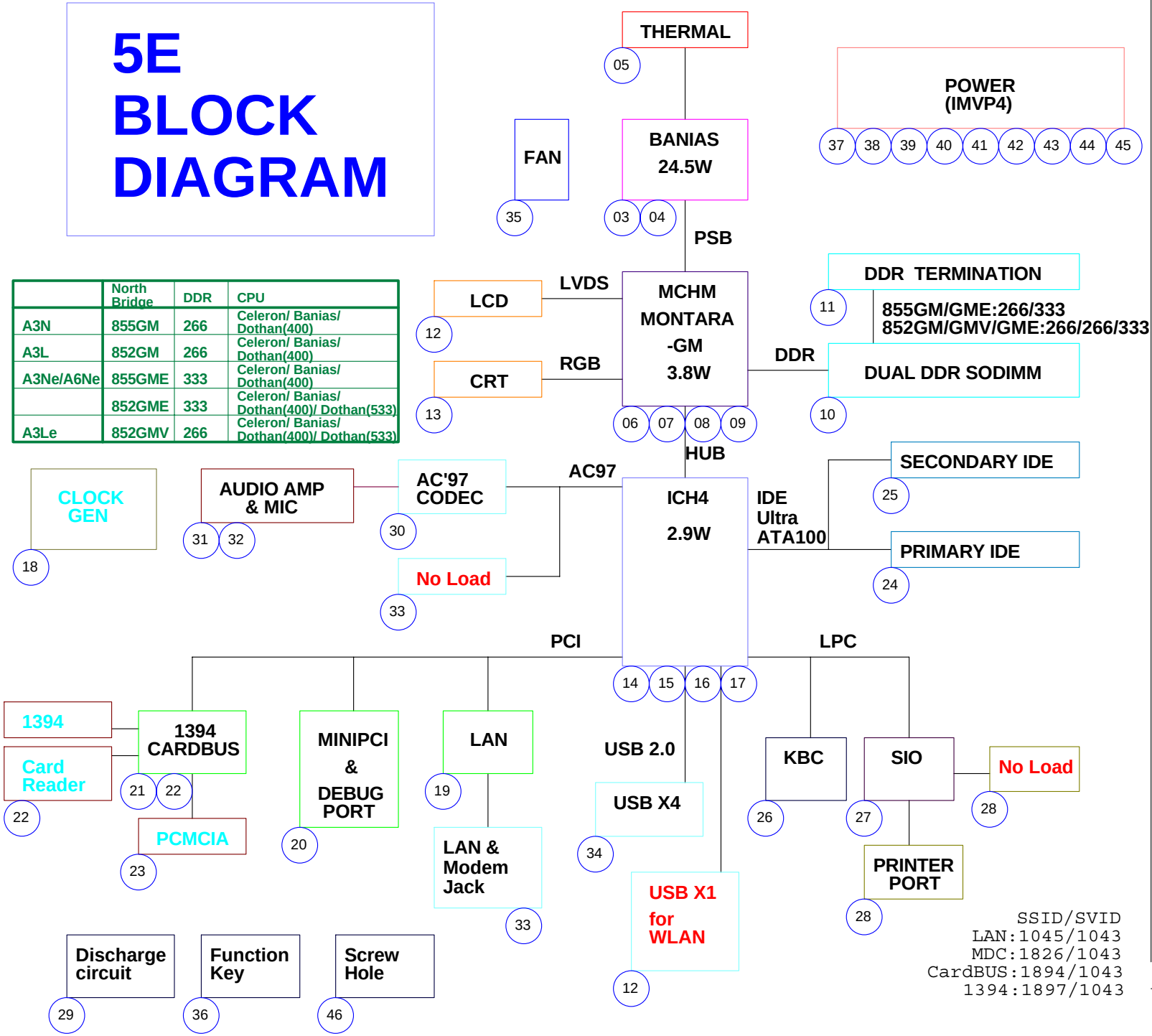

	North Bridge	DDR	CPU
A3N	855GM	266	Celeron/ Banias/ Dothan(400)
A3L	852GM	266	Celeron/ Banias/ Dothan(400)
A3Ne/A6Ne	855GME	333	Celeron/ Banias/ Dothan(400)
	852GME	333	Celeron/ Banias/ Dothan(400)/ Dothan(533)
A3Le	852GMV	266	Celeron/ Banias/ Dothan(400)/ Dothan(533)

SSID/SVID
LAN:1045/1043
MDC:1826/1043
CardBUS:1894/1043
1394:1897/1043

FILE LIST

01

01_BLOCK DIAGRAM
02_POWER DIAGRAM
03_CPU-BANIAS(HOST)
04_CPU-BANIAS(PWR)
05_THERMAL
06_NB-MCHM(DDR)
07_NB-MCHM(HOST)
08_NB-MCHM(VGA)
09_NB-MCHM(PWR)
10_DUAL DDR SODIMM
11_DDR TERMINATION
12_LVDS & BACKLIGHT
13_CRT CONNECTOR
14_ICH4-M(HUB_PCI)
15_ICH4-M(H_U_IDE_PM)
16_ICH4-M(PWR)
17_ICH4-M_PULLUP
18_CLOCK-ICS950815
19_LAN-RTL8100CL
20_MINIPCI
21_CB1394-R5C593(1)
22_CB1394-R5C593(2)
23_PCMCIA SOCKET
24_IDE-HD
25_IDE-ODD
26_KBC-M38857
27_SIO-ITE7805
28_IR&LPT_PORT
29_DISCHARGE CIRCUIT
30_CODEC-ALC650
31_AUDIO AMP
32_MIC
33_MDC&RJ45&RJ11
34_USB
35_FAN&Audio DJ
36_FUNCTION KEY
37_PWR & RESET SEQ
38_VCORE
39_1.25V&1.8V
40_2.5V&1.5V&1.35V&1.05V
41_SYSTEM
42_LOAD SWITCH
43_CHARGER
44_PIC16C54
45_BATLOW/SD#
46_SCREW HOLE & M/B SETTING
47_REVISION(1)
48_REVISION(2)
49_REVISION(3)
50_REVISION(4)
51_BLOCK DIAGRAM 5E
52_BLOCK DIAGRAM 7H
53_Part Reference 1
54_Part Reference 2
55_Power Net Reference

7H BLOCK DIAGRAM

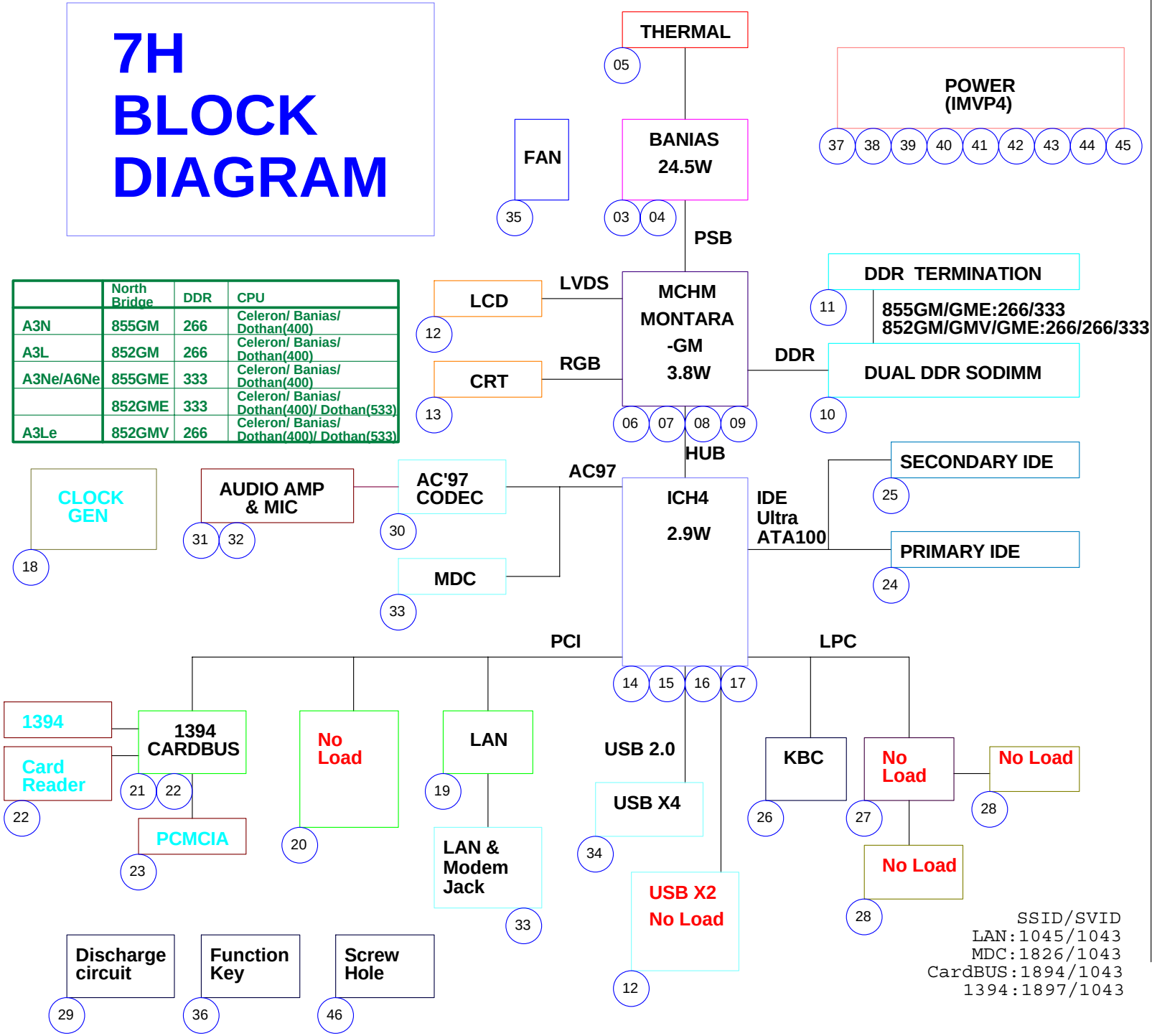

	North Bridge	DDR	CPU
A3N	855GM	266	Celeron/ Banias/ Dothan(400)
A3L	852GM	266	Celeron/ Banias/ Dothan(400)
A3Ne/A6Ne	855GME	333	Celeron/ Banias/ Dothan(400)
	852GME	333	Celeron/ Banias/ Dothan(400)/ Dothan(533)
A3Le	852GMV	266	Celeron/ Banias/ Dothan(400)/ Dothan(533)

SSID/SVID
LAN:1045/1043
MDC:1826/1043
CardBUS:1894/1043
1394:1897/1043

FILE LIST

01

01_BLOCK DIAGRAM
02_POWER DIAGRAM
03_CPU-BANIAS(HOST)
04_CPU-BANIAS(PWR)
05_THERMAL
06_NB-MCHM(DDR)
07_NB-MCHM(HOST)
08_NB-MCHM(VGA)
09_NB-MCHM(PWR)
10_DUAL DDR SODIMM
11_DDR TERMINATION
12_LVDS & BACKLIGHT
13_CRT CONNECTOR
14_ICH4-M(HUB_PCI)
15_ICH4-M(H_U_IDE_PM)
16_ICH4-M(PWR)
17_ICH4-M_PULLUP
18_CLOCK-ICS950815
19_LAN-RTL8100CL
20_MINIPCI
21_CB1394-R5C593(1)
22_CB1394-R5C593(2)
23_PCMCIA SOCKET
24_IDE-HD
25_IDE-ODD
26_KBC-M38857
27_SIO-ITE7805
28_IR&LPT_PORT
29_DISCHARGE CIRCUIT
30_CODEC-ALC650
31_AUDIO AMP
32_MIC
33_MDC&RJ45&RJ11
34_USB
35_FAN&Audio DJ
36_FUNCTION KEY
37_PWR & RESET SEQ
38_VCORE
39_1.25V&1.8V
40_2.5V&1.5V&1.35V&1.05V
41_SYSTEM
42_LOAD SWITCH
43_CHARGER
44_PIC16C54
45_BATLOW/SD#
46_SCREW HOLE & M/B SETTING
47_REVISION(1)
48_REVISION(2)
49_REVISION(3)
50_REVISION(4)
51_BLOCK DIAGRAM 5E
52_BLOCK DIAGRAM 7H
53_Part Reference 1
54_Part Reference 2
55_Power Net Reference