NM6 Block Diagram

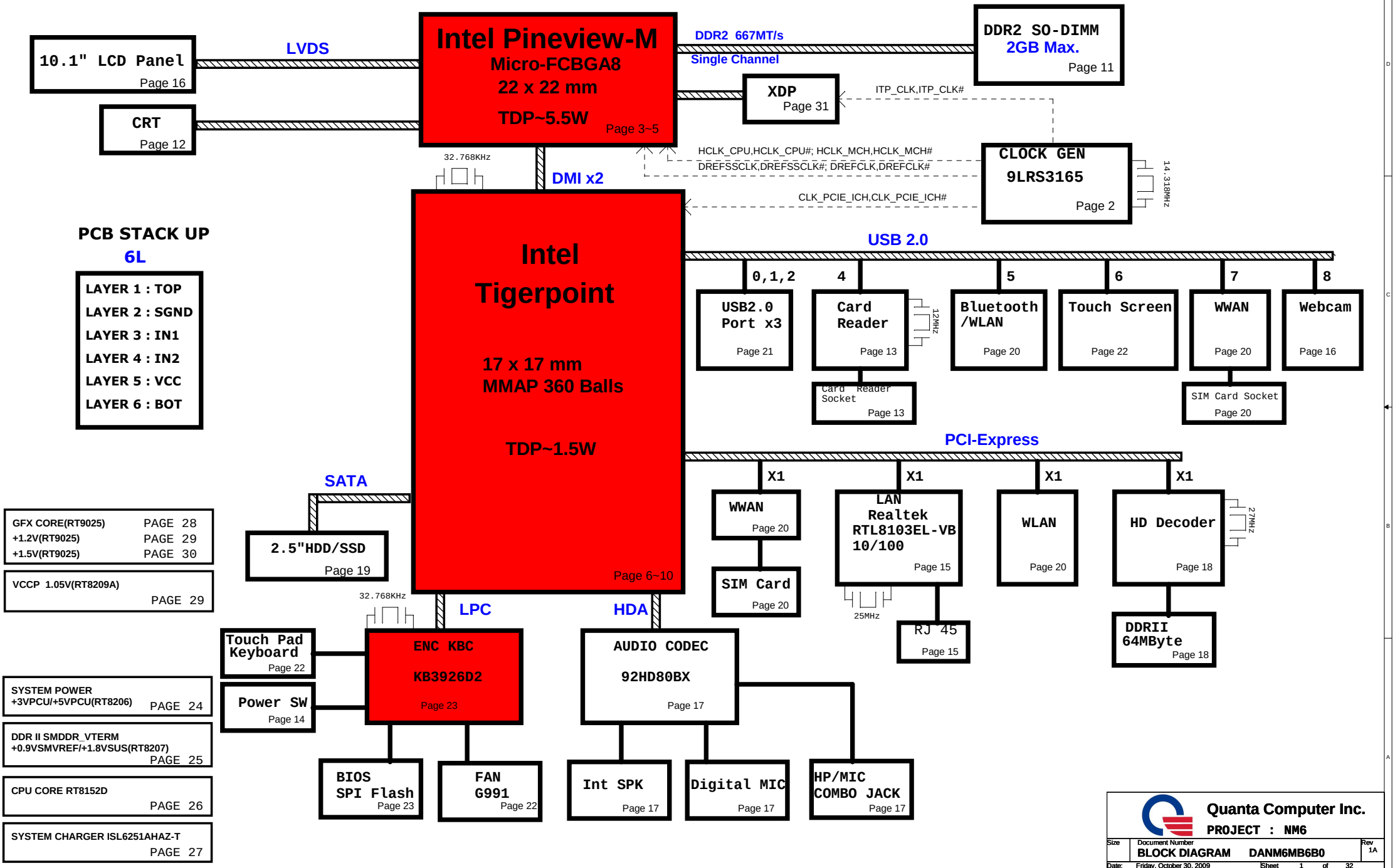

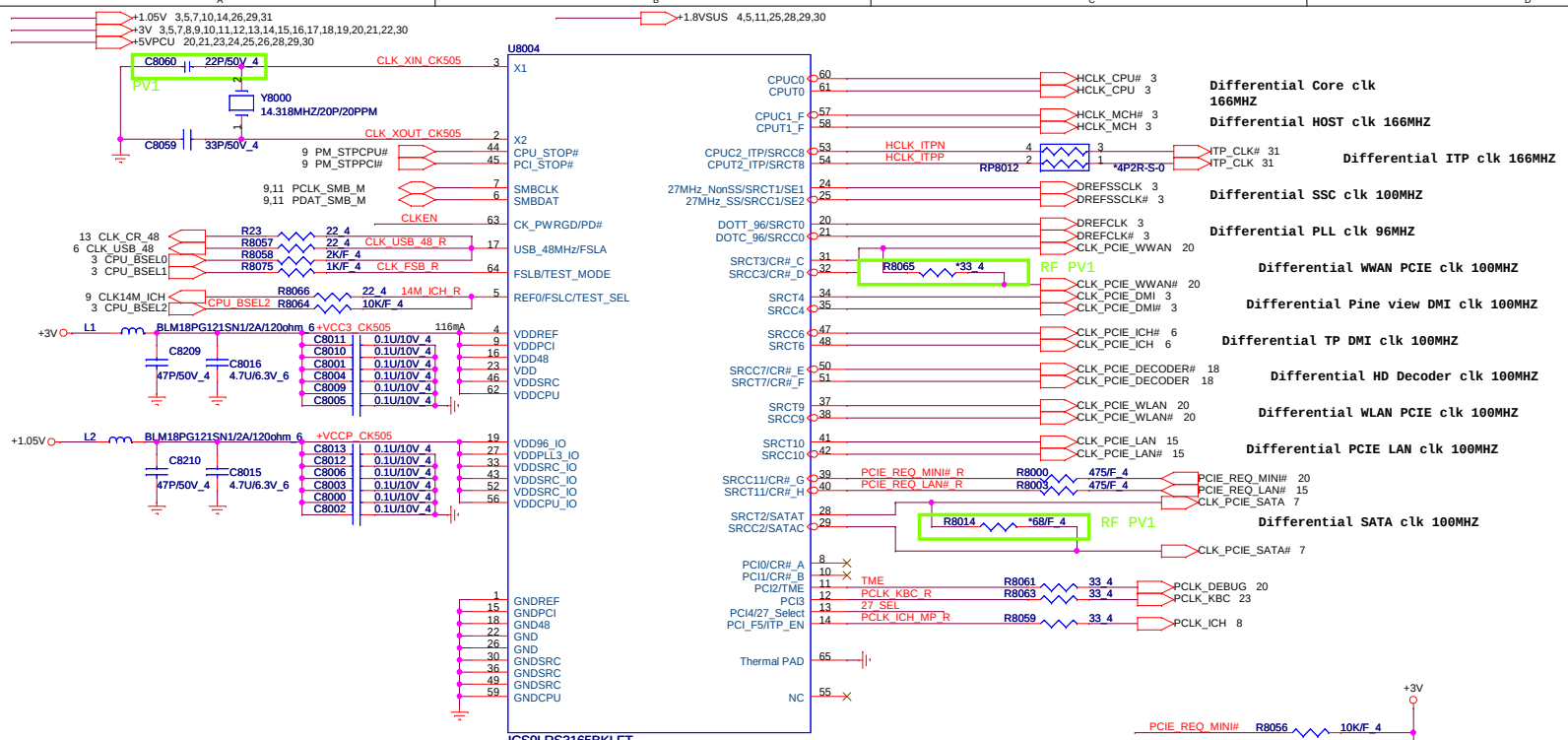

Differential Core clk 166MHZ

Differential HOST clk 166MHZ

Differential ITP clk 166MHZ

Differential SSC clk 100MHZ

Differential PLL clk 96MHZ

Differential WWAN PCIE clk 100MHZ

Differential Pine view DMI clk 100MHZ

Differential TP DMI clk 100MHZ

Differential HD Decoder clk 100MHZ

Differential WLAN PCIE clk 100MHZ

Differential PCIE LAN clk 100MHZ

Differential SATA clk 100MHZ

IDT AL003165000

SLG AL8WF581000

RTK AL000875000

27 Select PIN13	PIN 20/21	PIN 24/25
* 0	DOT_96 / DOT_96#	LCDCLK / LCDCLK#
1	SRC_0 / SRC_0#	27M / 27M_SS

ITP_EN(PIN14)	PIN53/54
0	SRC8#/SRC8
* 1	ITP/ITP#

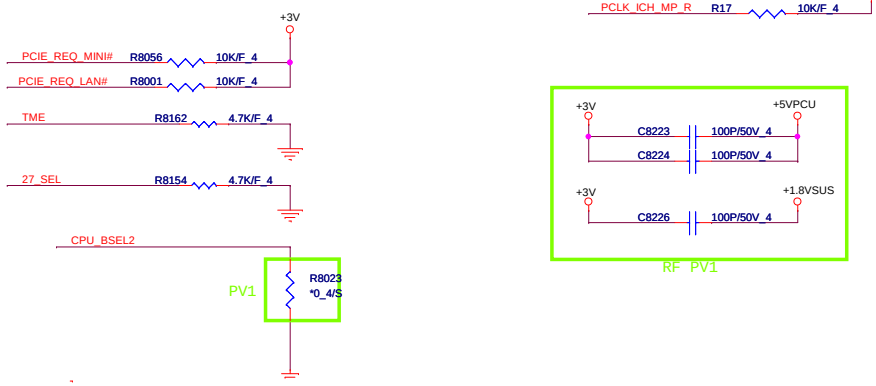

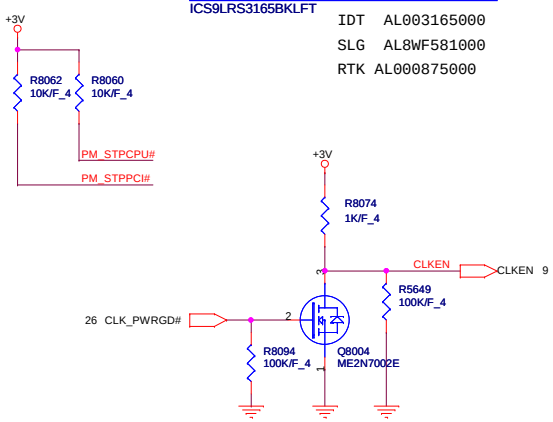

FSC BSEL2	FSB BSEL1	FSA BSEL0	CPU	SRC	PCI	REF	USB	DOT	Spread %
0	0	0	266.66	100	33.33	14.318	48	96	0.5 Down
0	0	1	133.33	100	33.33	14.318	48	96	0.5 Down
0	1	0	200.00	100	33.33	14.318	48	96	0.5 Down
0	1	1	166.66	100	33.33	14.318	48	96	0.5 Down
1	0	0	333.33	100	33.33	14.318	48	96	0.5 Down
1	0	1	100.00	100	33.33	14.318	48	96	0.5 Down
1	1	0	400.00	100	33.33	14.318	48	96	0.5 Down
1	1	1	RESERVED						

Quanta Computer Inc.

PROJECT : NM6

Size	Document Number	Rev
	Clock Gen	1A

Date: Thursday, October 29, 2009 Sheet 2 of 32

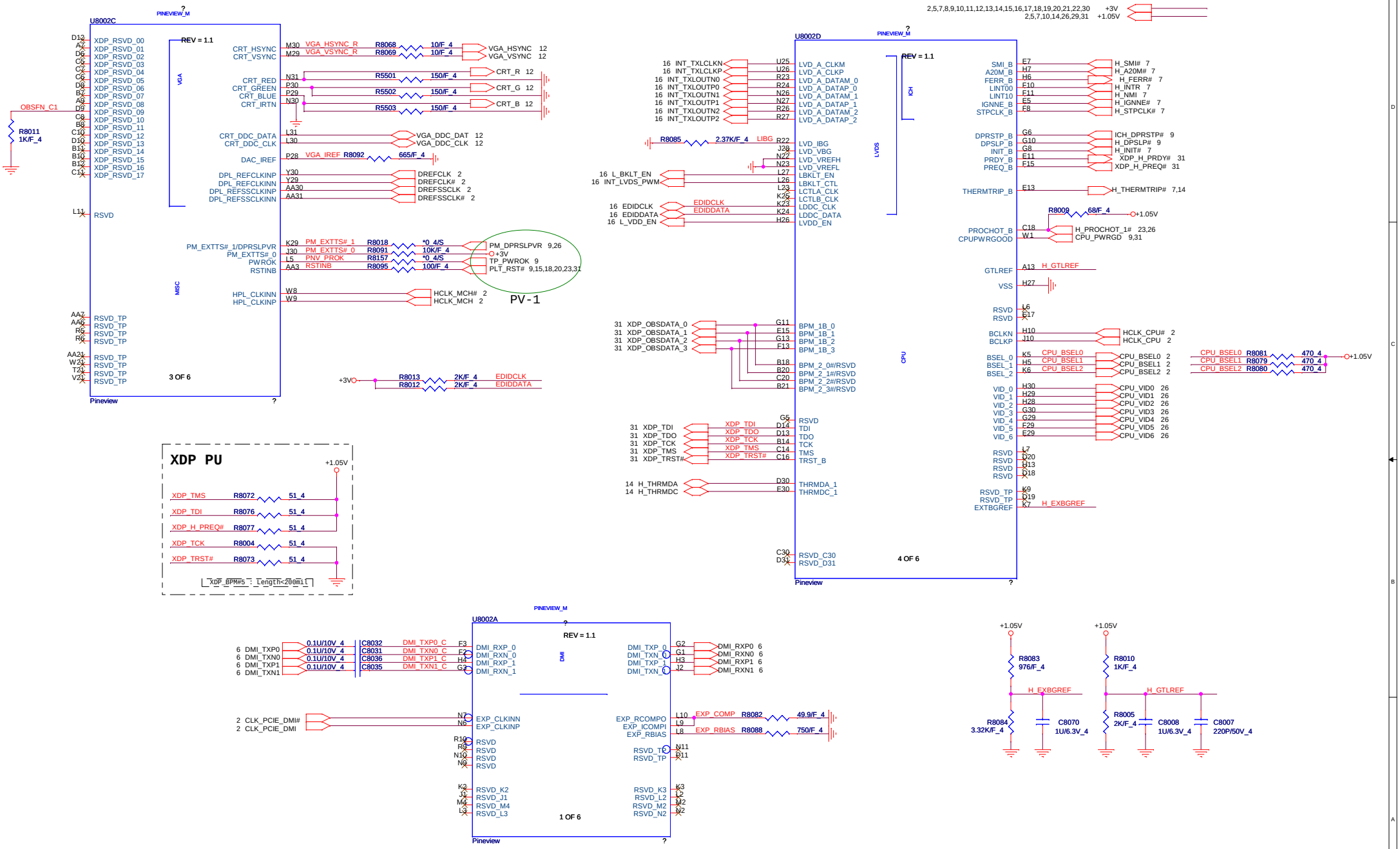
U8002C
PINEVIEW_M
REV = 1.1
VGA
MISC
3 OF 6
Pineview
U8002D
LVDS
CPU
ICH
4 OF 6
U8002A
DMI
1 OF 6
PV-1
XDP PU
+1.05V
XDP_BPM#5 : Length<200mil
Quanta Computer Inc.
PROJECT : NM6
Pineview DMI/Display(1/4)
Size
Document Number
Rev
1A
Date: Thursday, October 29, 2009
Sheet 3 of 32

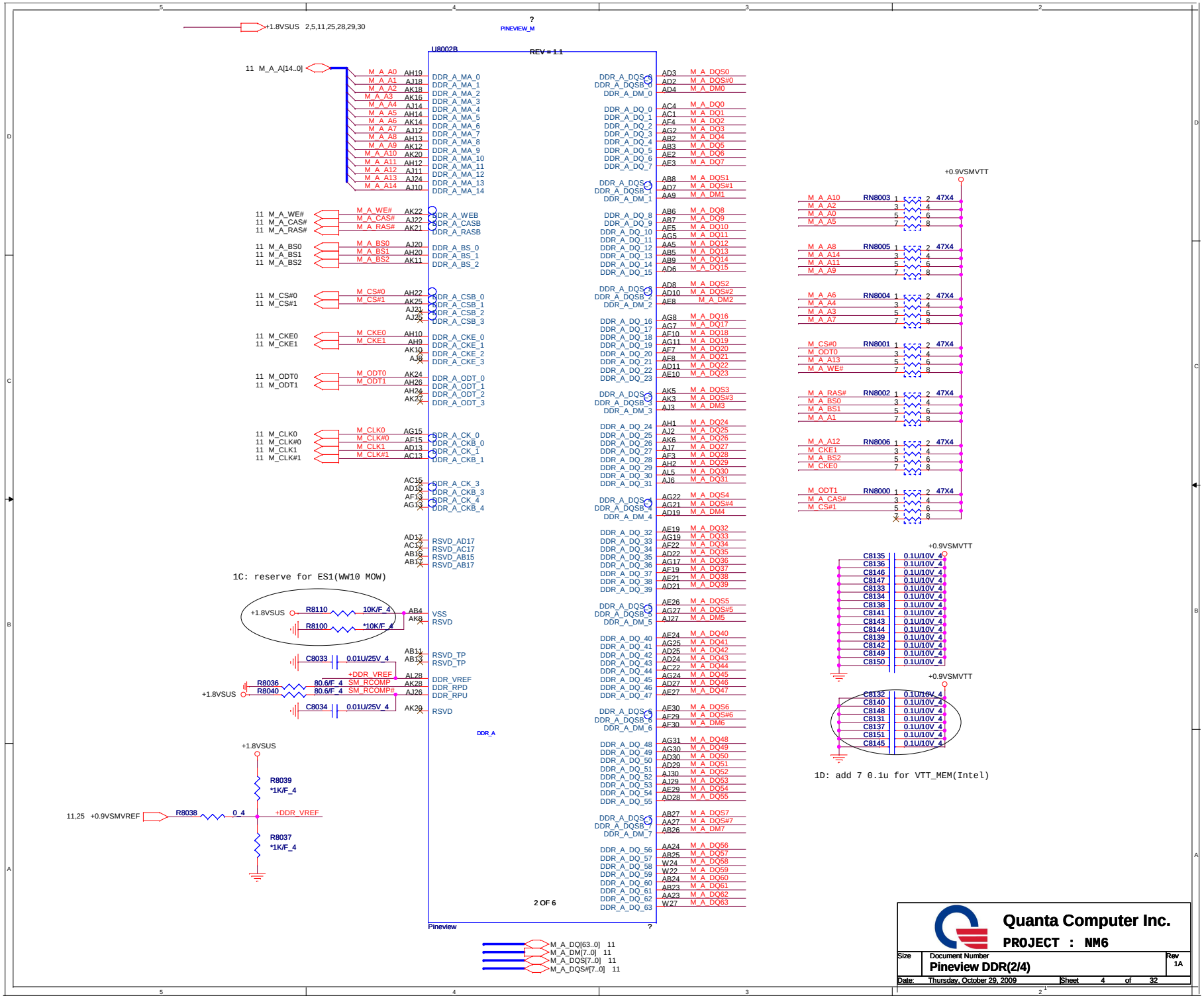
+1.8VSUS 2,5,11,25,28,29,30
U8002B
REV = 1.1
PINEVIEW_M
11 M_A_A[14..0]
M_A_A0 AH19 DDR_A_MA_0
M_A_A1 AJ18 DDR_A_MA_1
M_A_A2 AK18 DDR_A_MA_2
M_A_A3 AK16 DDR_A_MA_3
M_A_A4 AJ14 DDR_A_MA_4
M_A_A5 AH14 DDR_A_MA_5
M_A_A6 AK14 DDR_A_MA_6
M_A_A7 AJ12 DDR_A_MA_7
M_A_A8 AH13 DDR_A_MA_8
M_A_A9 AK12 DDR_A_MA_9
M_A_A10 AK20 DDR_A_MA_10
M_A_A11 AH12 DDR_A_MA_11
M_A_A12 AJ11 DDR_A_MA_12
M_A_A13 AJ24 DDR_A_MA_13
M_A_A14 AJ10 DDR_A_MA_14
11 M_A_WE#
11 M_A_CAS#
11 M_A_RAS#
M_A_WE# AK22 DDR_A_WEB
M_A_CAS# AJ22 DDR_A_CASB
M_A_RAS# AK21 DDR_A_RASB
11 M_A_BS0
11 M_A_BS1
11 M_A_BS2
M_A_BS0 AJ20 DDR_A_BS_0
M_A_BS1 AH20 DDR_A_BS_1
M_A_BS2 AK11 DDR_A_BS_2
11 M_CS#0
11 M_CS#1
M_CS#0 AH22 DDR_A_CSB_0
M_CS#1 AK25 DDR_A_CSB_1
AJ21 DDR_A_CSB_2
AJ25 DDR_A_CSB_3
11 M_CKE0
11 M_CKE1
M_CKE0 AH10 DDR_A_CKE_0
M_CKE1 AH9 DDR_A_CKE_1
AK10 DDR_A_CKE_2
AJ9 DDR_A_CKE_3
11 M_ODT0
11 M_ODT1
M_ODT0 AK24 DDR_A_ODT_0
M_ODT1 AH26 DDR_A_ODT_1
AH24 DDR_A_ODT_2
AK27 DDR_A_ODT_3
11 M_CLK0
11 M_CLK#0
11 M_CLK1
11 M_CLK#1
M_CLK0 AG15 DDR_A_CK_0
M_CLK#0 AF15 DDR_A_CKB_0
M_CLK1 AD13 DDR_A_CK_1
M_CLK#1 AC13 DDR_A_CKB_1
AC15 DDR_A_CK_3
AD15 DDR_A_CKB_3
AF13 DDR_A_CK_4
AG13 DDR_A_CKB_4
AD17 RSVD_AD17
AC17 RSVD_AC17
AB15 RSVD_AB15
AB17 RSVD_AB17
1C: reserve for ES1(WW10 MOW)
+1.8VSUS
R8110 10K/F_4
R8100 *10K/F_4
AB4 VSS
AK8 RSVD
AB11 RSVD_TP
AB13 RSVD_TP
C8033 0.01U/25V_4
+DDR_VREF
AL28 DDR_VREF
R8036 80.6/F_4 SM_RCOMP
R8040 80.6/F_4 SM_RCOMP#
+1.8VSUS
AK28 DDR_RPD
AJ26 DDR_RPU
C8034 0.01U/25V_4
AK29 RSVD
DDR_A
+1.8VSUS
R8039 *1K/F_4
11,25 +0.9VSMVREF
R8038 0_4
+DDR_VREF
R8037 *1K/F_4
DDR_A_DQS_0 AD3 M_A_DQS0
DDR_A_DQSB_0 AD2 M_A_DQS#0
DDR_A_DM_0 AD4 M_A_DM0
DDR_A_DQ_0 AC4 M_A_DQ0
DDR_A_DQ_1 AC1 M_A_DQ1
DDR_A_DQ_2 AF4 M_A_DQ2
DDR_A_DQ_3 AG2 M_A_DQ3
DDR_A_DQ_4 AB2 M_A_DQ4
DDR_A_DQ_5 AB3 M_A_DQ5
DDR_A_DQ_6 AE2 M_A_DQ6
DDR_A_DQ_7 AE3 M_A_DQ7
DDR_A_DQS_1 AB8 M_A_DQS1
DDR_A_DQSB_1 AD7 M_A_DQS#1
DDR_A_DM_1 AA9 M_A_DM1
DDR_A_DQ_8 AB6 M_A_DQ8
DDR_A_DQ_9 AB7 M_A_DQ9
DDR_A_DQ_10 AE5 M_A_DQ10
DDR_A_DQ_11 AG5 M_A_DQ11
DDR_A_DQ_12 AA5 M_A_DQ12
DDR_A_DQ_13 AB5 M_A_DQ13
DDR_A_DQ_14 AB9 M_A_DQ14
DDR_A_DQ_15 AD6 M_A_DQ15
DDR_A_DQS_2 AD8 M_A_DQS2
DDR_A_DQSB_2 AD10 M_A_DQS#2
DDR_A_DM_2 AF8 M_A_DM2
DDR_A_DQ_16 AG8 M_A_DQ16
DDR_A_DQ_17 AG7 M_A_DQ17
DDR_A_DQ_18 AF10 M_A_DQ18
DDR_A_DQ_19 AG11 M_A_DQ19
DDR_A_DQ_20 AF7 M_A_DQ20
DDR_A_DQ_21 AF8 M_A_DQ21
DDR_A_DQ_22 AD11 M_A_DQ22
DDR_A_DQ_23 AE10 M_A_DQ23
DDR_A_DQS_3 AK5 M_A_DQS3
DDR_A_DQSB_3 AK3 M_A_DQS#3
DDR_A_DM_3 AJ3 M_A_DM3
DDR_A_DQ_24 AH1 M_A_DQ24
DDR_A_DQ_25 AJ2 M_A_DQ25
DDR_A_DQ_26 AK6 M_A_DQ26
DDR_A_DQ_27 AJ7 M_A_DQ27
DDR_A_DQ_28 AF3 M_A_DQ28
DDR_A_DQ_29 AH2 M_A_DQ29
DDR_A_DQ_30 AL5 M_A_DQ30
DDR_A_DQ_31 AJ6 M_A_DQ31
DDR_A_DQS_4 AG22 M_A_DQS4
DDR_A_DQSB_4 AG21 M_A_DQS#4
DDR_A_DM_4 AD19 M_A_DM4
DDR_A_DQ_32 AE19 M_A_DQ32
DDR_A_DQ_33 AG19 M_A_DQ33
DDR_A_DQ_34 AF22 M_A_DQ34
DDR_A_DQ_35 AD22 M_A_DQ35
DDR_A_DQ_36 AG17 M_A_DQ36
DDR_A_DQ_37 AE19 M_A_DQ37
DDR_A_DQ_38 AE21 M_A_DQ38
DDR_A_DQ_39 AD21 M_A_DQ39
DDR_A_DQS_5 AE26 M_A_DQS5
DDR_A_DQSB_5 AG27 M_A_DQS#5
DDR_A_DM_5 AJ27 M_A_DM5
DDR_A_DQ_40 AE24 M_A_DQ40
DDR_A_DQ_41 AG25 M_A_DQ41
DDR_A_DQ_42 AD25 M_A_DQ42
DDR_A_DQ_43 AD24 M_A_DQ43
DDR_A_DQ_44 AC22 M_A_DQ44
DDR_A_DQ_45 AG24 M_A_DQ45
DDR_A_DQ_46 AD27 M_A_DQ46
DDR_A_DQ_47 AE27 M_A_DQ47
DDR_A_DQS_6 AE30 M_A_DQS6
DDR_A_DQSB_6 AF29 M_A_DQS#6
DDR_A_DM_6 AF30 M_A_DM6
DDR_A_DQ_48 AG31 M_A_DQ48
DDR_A_DQ_49 AG30 M_A_DQ49
DDR_A_DQ_50 AD30 M_A_DQ50
DDR_A_DQ_51 AD29 M_A_DQ51
DDR_A_DQ_52 AJ30 M_A_DQ52
DDR_A_DQ_53 AJ29 M_A_DQ53
DDR_A_DQ_54 AE29 M_A_DQ54
DDR_A_DQ_55 AD28 M_A_DQ55
DDR_A_DQS_7 AB27 M_A_DQS7
DDR_A_DQSB_7 AA27 M_A_DQS#7
DDR_A_DM_7 AB26 M_A_DM7
DDR_A_DQ_56 AA24 M_A_DQ56
DDR_A_DQ_57 AB25 M_A_DQ57
DDR_A_DQ_58 W24 M_A_DQ58
DDR_A_DQ_59 W22 M_A_DQ59
DDR_A_DQ_60 AB24 M_A_DQ60
DDR_A_DQ_61 AB23 M_A_DQ61
DDR_A_DQ_62 AA23 M_A_DQ62
DDR_A_DQ_63 W27 M_A_DQ63
2 OF 6
Pineview
M_A_DQ[63..0] 11
M_A_DM[7..0] 11
M_A_DQS[7..0] 11
M_A_DQS#[7..0] 11
+0.9VSMVTT
RN8003 M_A_A10 M_A_A2 M_A_A0 M_A_A5 47X4
RN8005 M_A_A8 M_A_A14 M_A_A11 M_A_A9 47X4
RN8004 M_A_A6 M_A_A4 M_A_A3 M_A_A7 47X4
RN8001 M_CS#0 M_ODT0 M_A_A13 M_A_WE# 47X4
RN8002 M_A_RAS# M_A_BS0 M_A_BS1 M_A_A1 47X4
RN8006 M_A_A12 M_CKE1 M_A_BS2 M_CKE0 47X4
RN8000 M_ODT1 M_A_CAS# M_CS#1 47X4
+0.9VSMVTT
C8135 C8136 C8146 C8147 C8133 C8134 C8138 C8141 C8143 C8144 C8139 C8142 C8149 C8150 0.1U/10V_4
+0.9VSMVTT
C8132 C8140 C8148 C8131 C8137 C8151 C8145 0.1U/10V_4
1D: add 7 0.1u for VTT_MEM(Intel)
Quanta Computer Inc.
PROJECT : NM6
Size
Document Number
Pineview DDR(2/4)
Rev 1A
Date: Thursday, October 29, 2009
Sheet 4 of 32

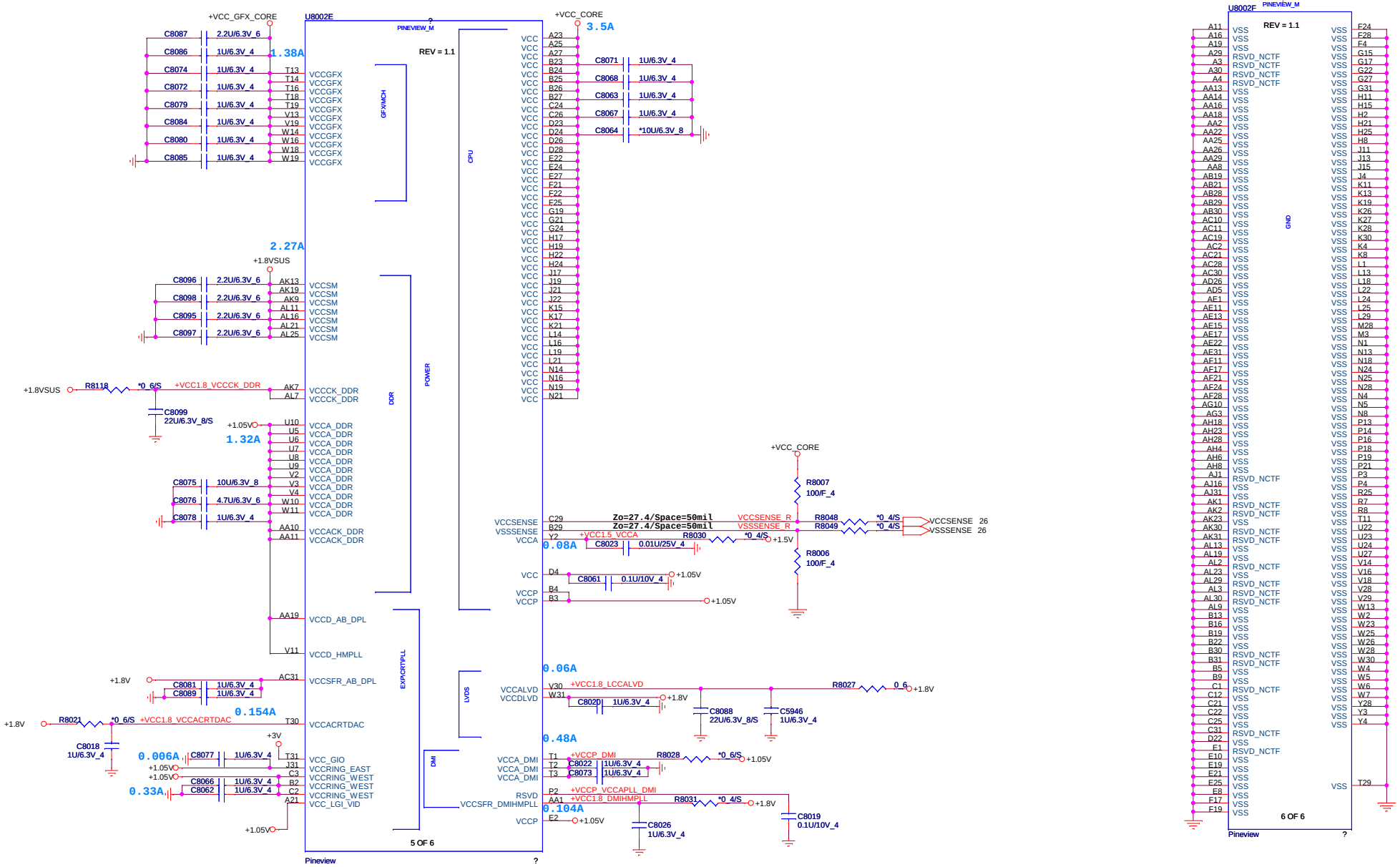

Quanta Computer Inc.

PROJECT : NM6

Size	Document Number	Rev
	Pineview Power(3/4)	1A

Date: Thursday, October 29, 2009 Sheet 5 of 32

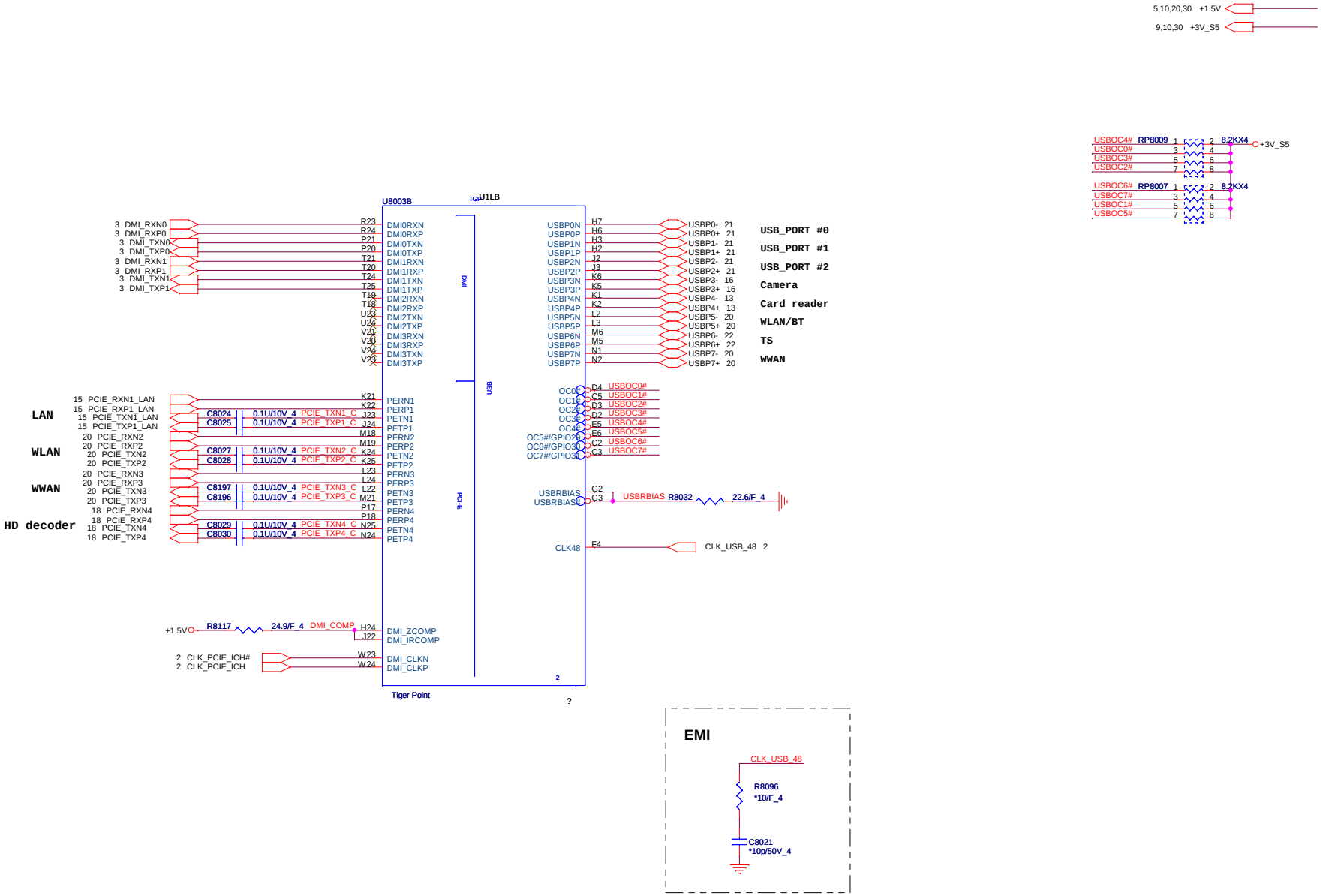

Quanta Computer Inc.

PROJECT : NM6

Size	Document Number	Rev
	TigerPoint DMI/PCIE(1/6)	1A

Date: Thursday, October 29, 2009 Sheet 6 of 32

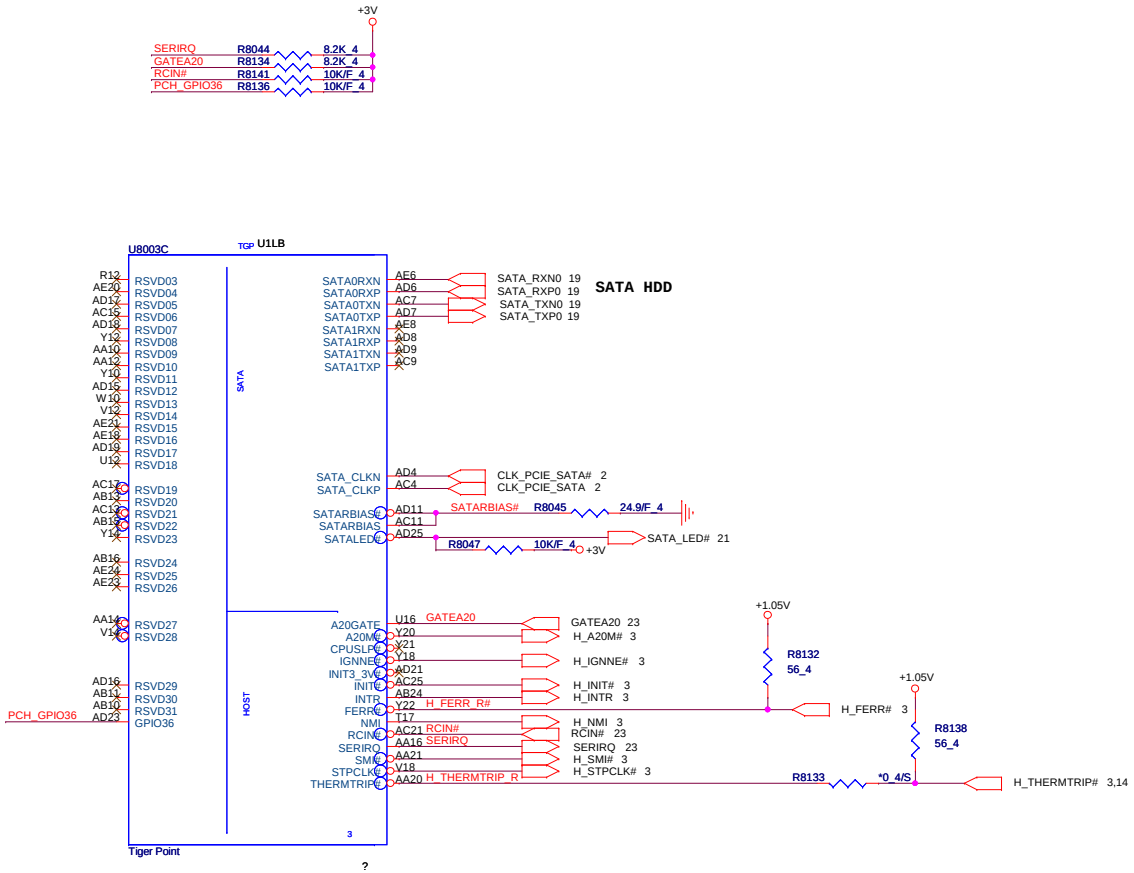

Quanta Computer Inc.

PROJECT : NM6

Size	Document Number	Rev
	TigerPoint Sata/Host(2/6)	1A

Date: Thursday, October 29, 2009 Sheet 7 of 32

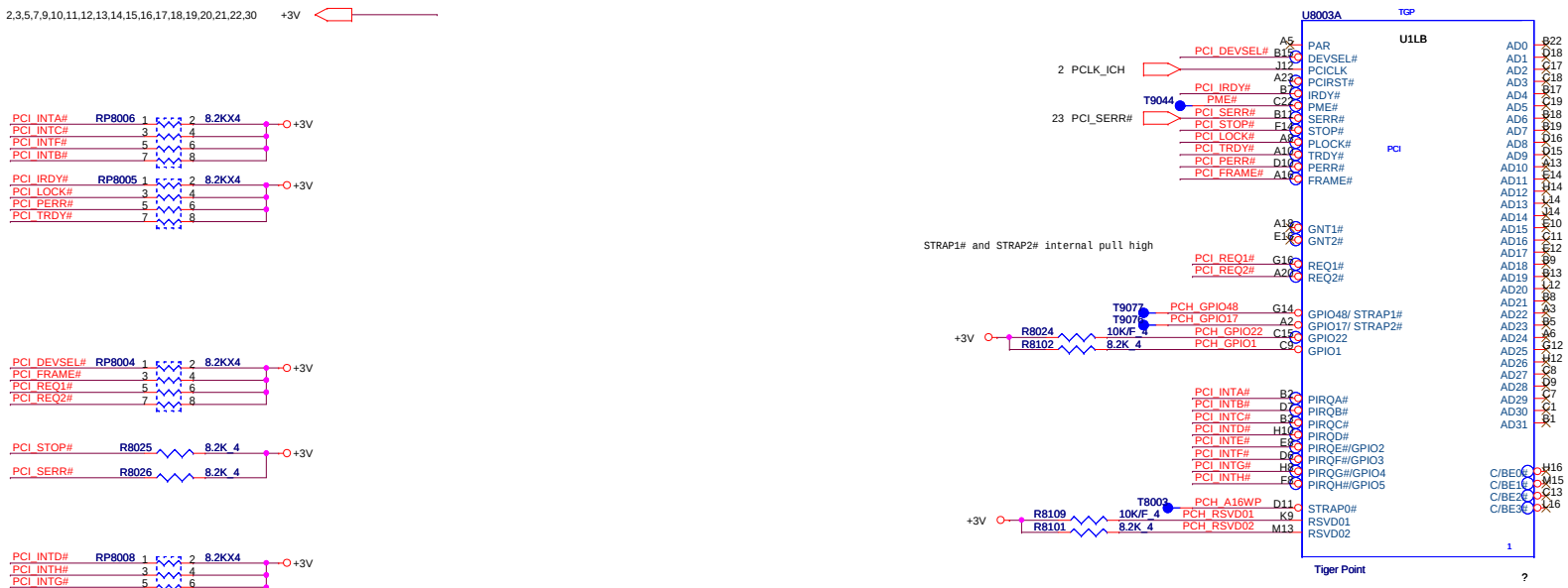

ICH Boot BIOS select

PCH_GPIO17 (INT PU)	PCH_GPIO48 (INT PU)	Boot BIOS Location
0	1	SPI
1	0	PCI
1	1	LPC (Default)

A16 SWAP Override strap

PCH_A16WP (INT PU)	Low = A16 swap override enabled High = Default

IRQ	Description
PIRQA	USB UHCI Controller #1, #4
PIRQB	AC'97 Codec; option for SMBUS
PIRQC	USB UH Controller #3; SATA/IDE Native Mode
PIRQD	USB UHCI Controller #2
PIRQE	Internal LAN; Option for SCI, TCO, HPET#0,1,2
PIRQF	Option for SCI, TCO, HPET#0,1,2
PIRQG	Option for SCI, TCO, HPET#0,1,2
PIRQH	USB EHCI Controller; Option for SCI, TCO, HPET#0,1,2

PCI_GNT#2	Internal PU Should not be PD

Quanta Computer Inc.

PROJECT : NM6

Size	Document Number	Rev
	TigerPoint PCI(3/6)	1A

Date: Thursday, October 29, 2009 Sheet 8 of 32

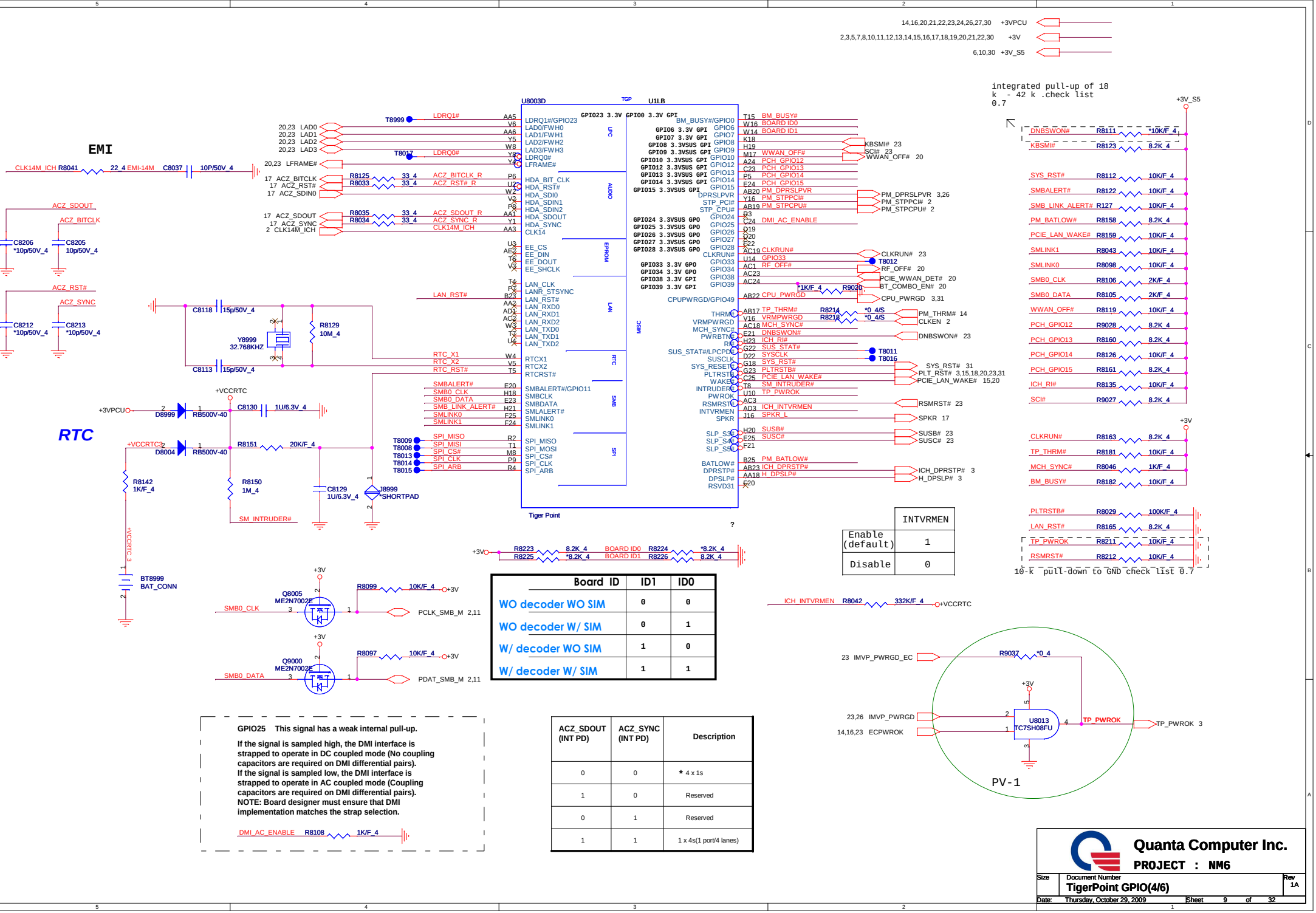
EMI
RTC
U8003D
U1LB
Tiger Point
integrated pull-up of 18 k - 42 k .check list 0.7
10-k pull-down to GND check list 0.7
INTVRMEN
Enable (default) 1
Disable 0
Board ID ID1 ID0
WO decoder WO SIM 0 0
WO decoder W/ SIM 0 1
W/ decoder WO SIM 1 0
W/ decoder W/ SIM 1 1
GPIO25 This signal has a weak internal pull-up.
If the signal is sampled high, the DMI interface is strapped to operate in DC coupled mode (No coupling capacitors are required on DMI differential pairs).
If the signal is sampled low, the DMI interface is strapped to operate in AC coupled mode (Coupling capacitors are required on DMI differential pairs).
NOTE: Board designer must ensure that DMI implementation matches the strap selection.
ACZ_SDOUT (INT PD) ACZ_SYNC (INT PD) Description
0 0 * 4 x 1s
1 0 Reserved
0 1 Reserved
1 1 1 x 4s(1 port/4 lanes)
PV-1
Quanta Computer Inc.
PROJECT : NM6
Size Document Number Rev
TigerPoint GPIO(4/6) 1A
Date: Thursday, October 29, 2009 Sheet 9 of 32

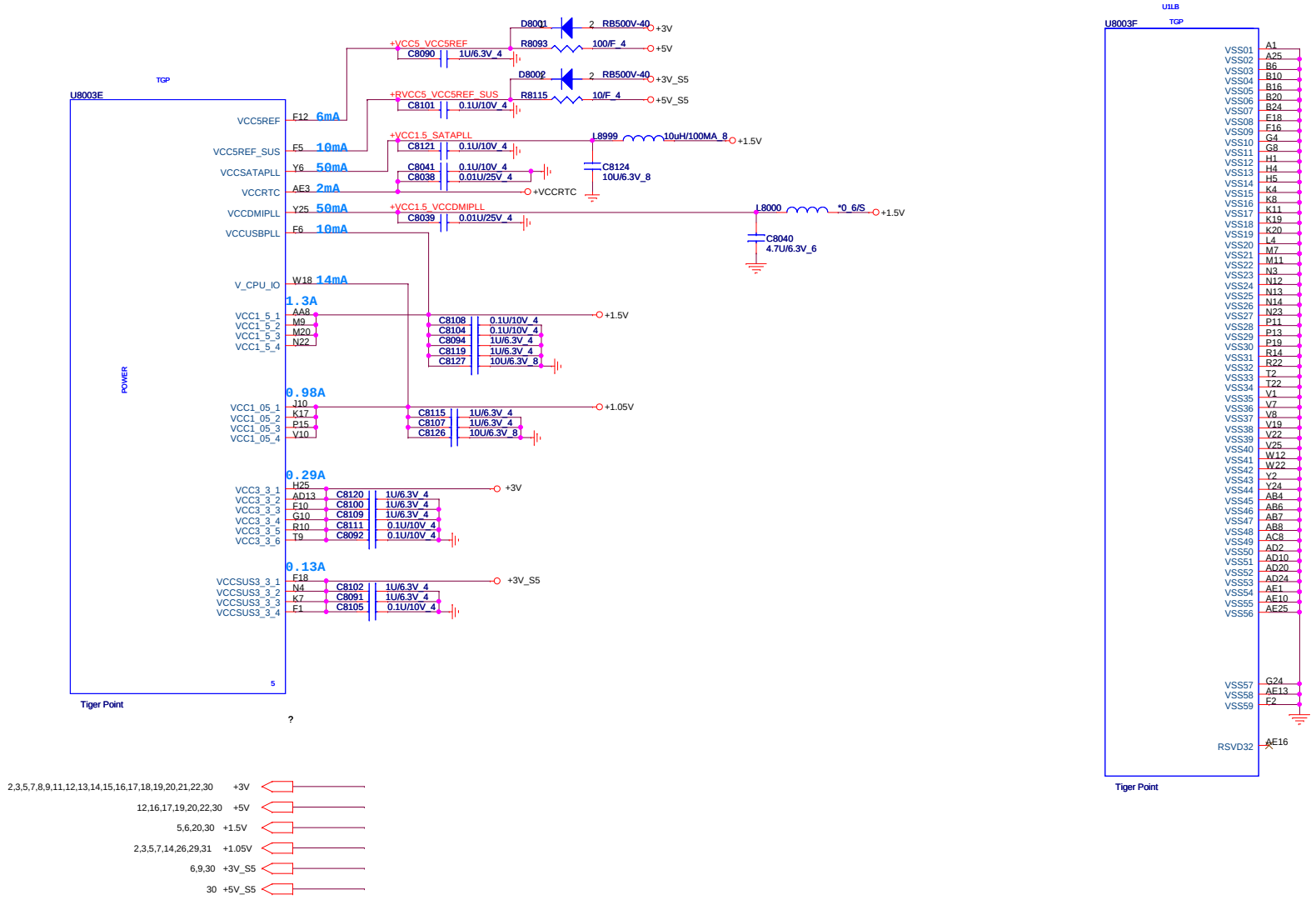

Quanta Computer Inc.			
PROJECT : NM6			
Size	Document Number		Rev
	TigerPoint Power(5/6)		1A
Date: Thursday, October 29, 2009		Sheet 10 of 32	

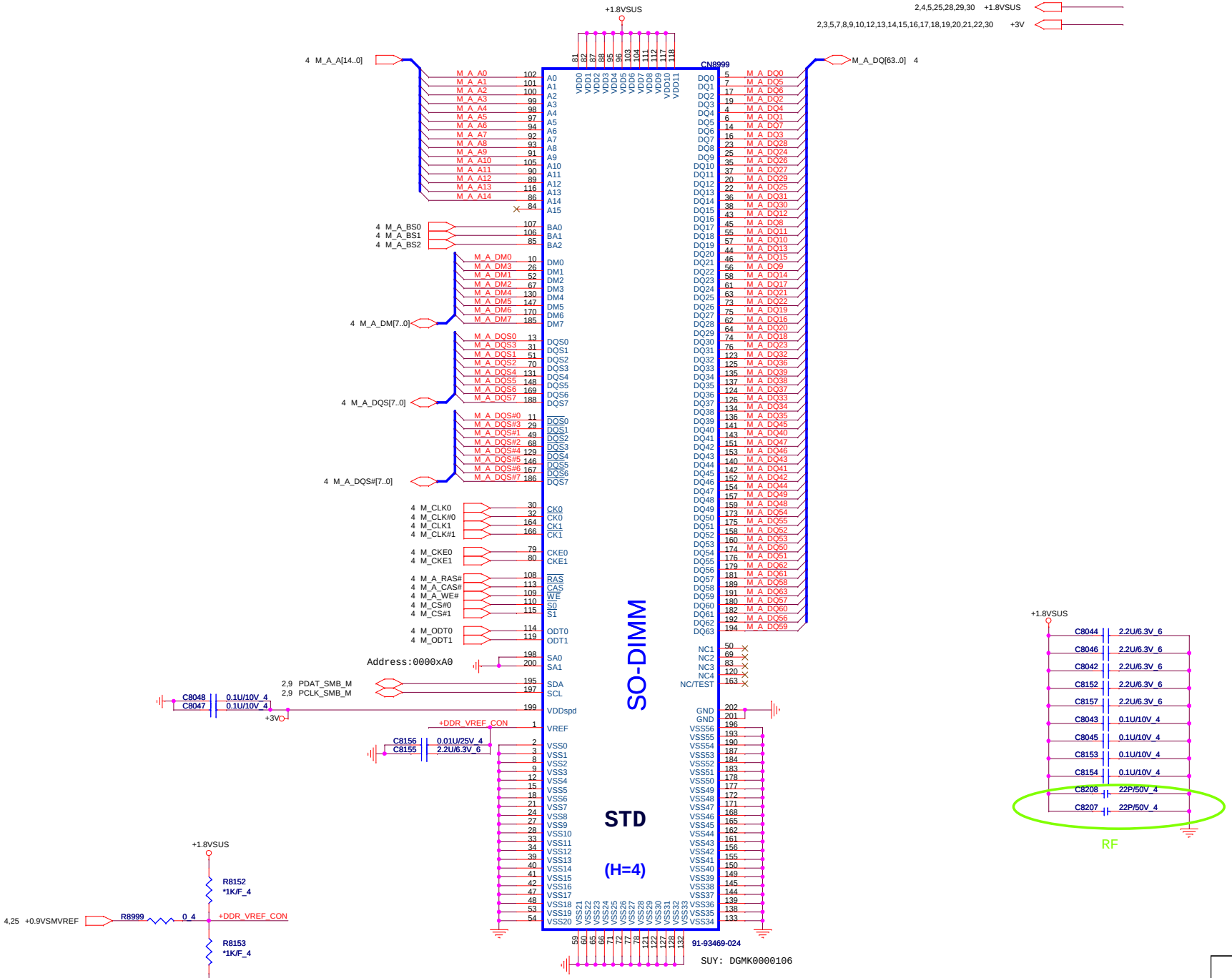

Quanta Computer Inc.

PROJECT : NM6

Size	Document Number	Rev
	DDRII SODIMM	1A

Date: Thursday, October 29, 2009 Sheet 11 of 32

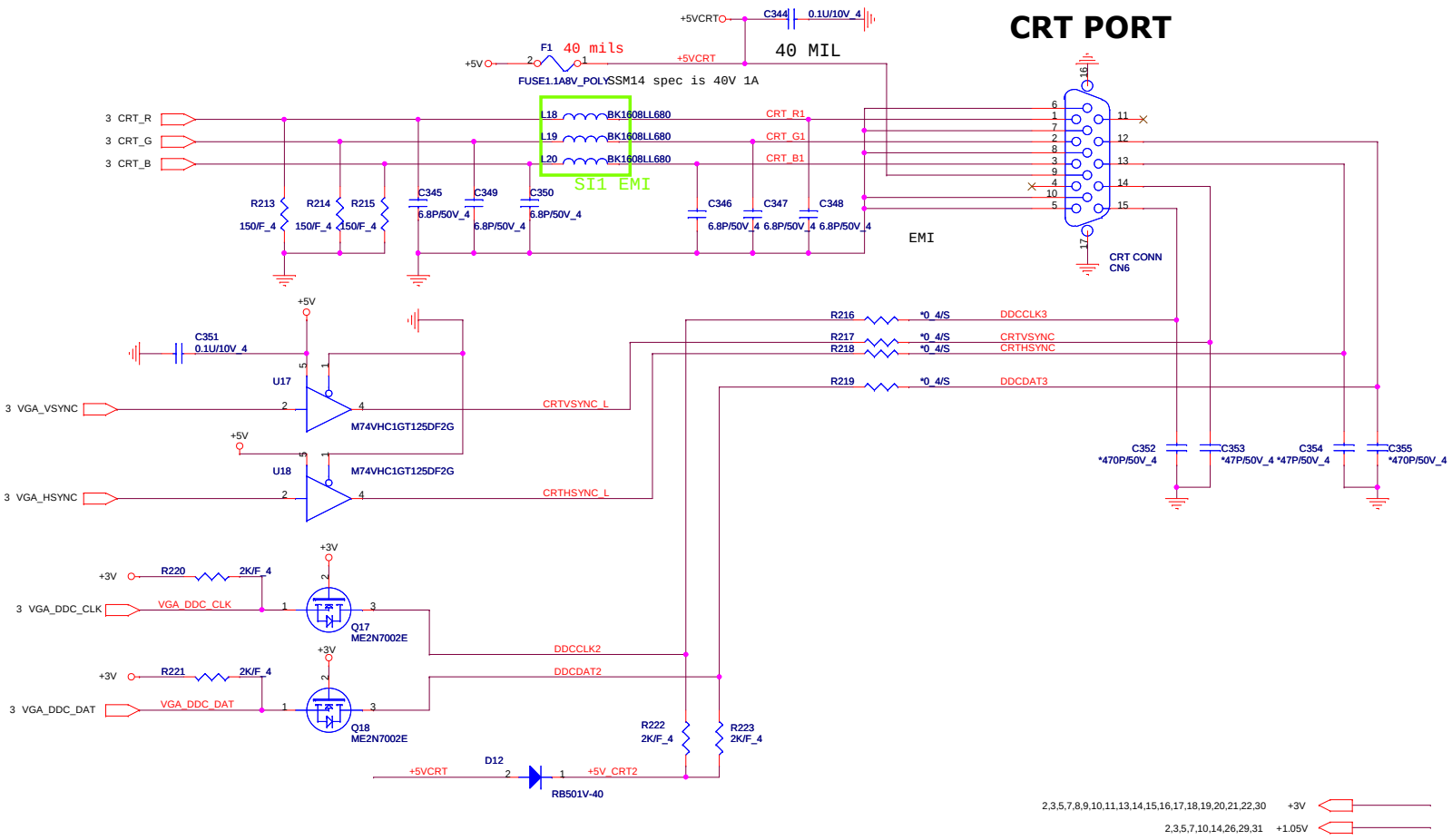

Quanta Computer Inc.

PROJECT : NM6

Size	Document Number	Rev
	CRT	1A

Date: Thursday, October 29, 2009 Sheet 12 of 32

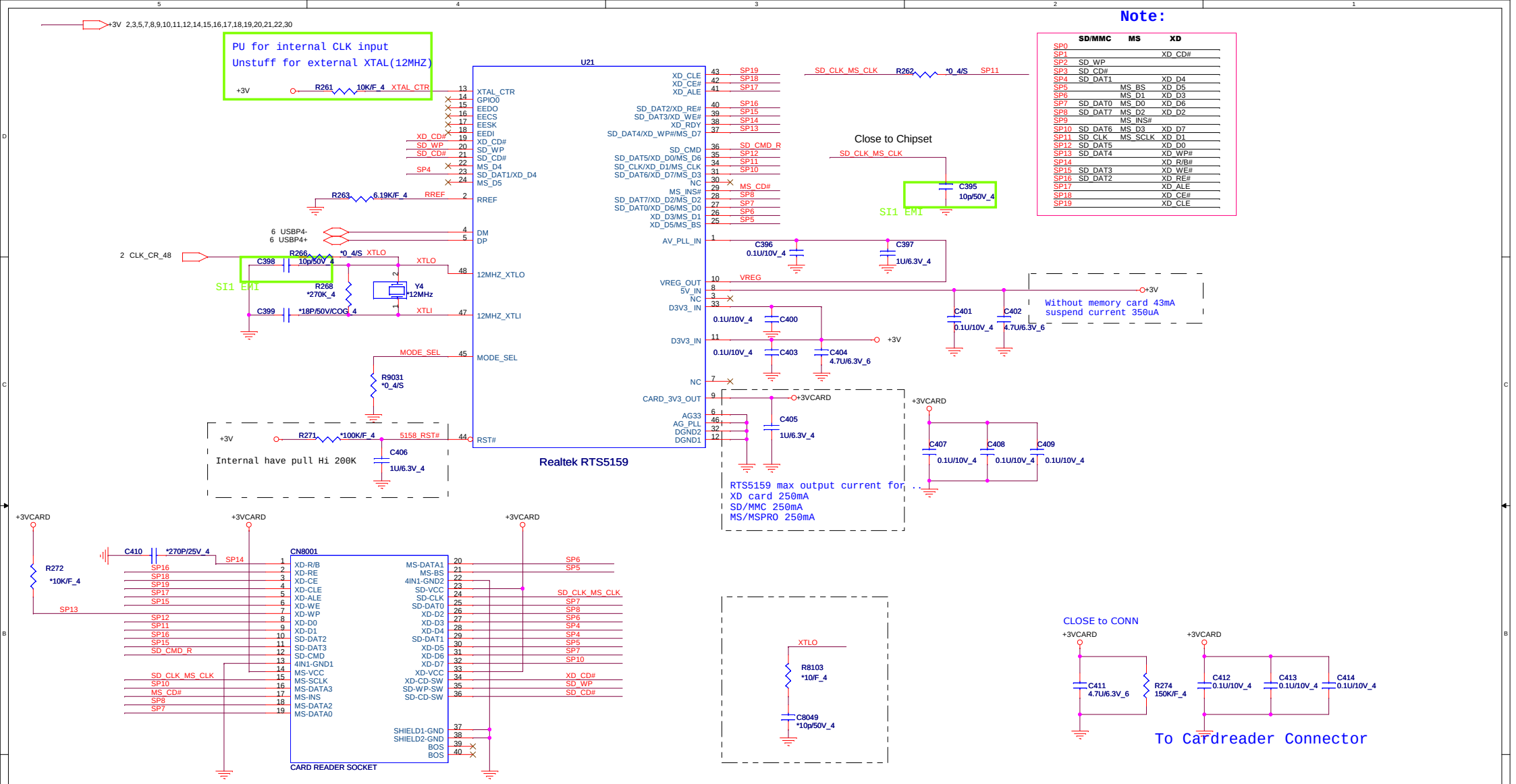

5 IN1 CARD-READER (PUSH-PUSH)

Support SD/SD PRO/MMC/MS/MS PRO/xD Cards

Quanta Computer Inc.			
PROJECT : NM6			
Size	Document Number: Realtek RTS5159 & Card Reader		Rev 1A
Date: Thursday, October 29, 2009	Sheet 13 of 32		

LID Switch

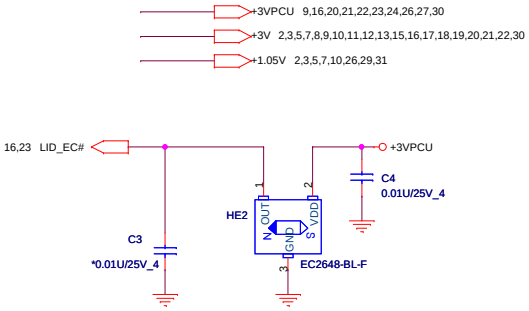

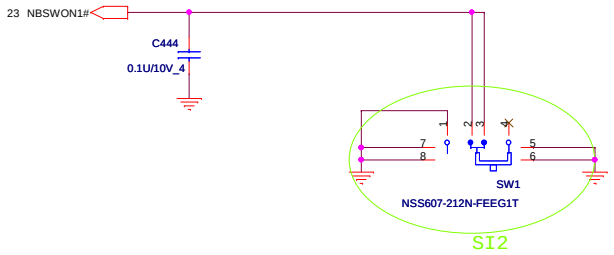

CPU Thermal

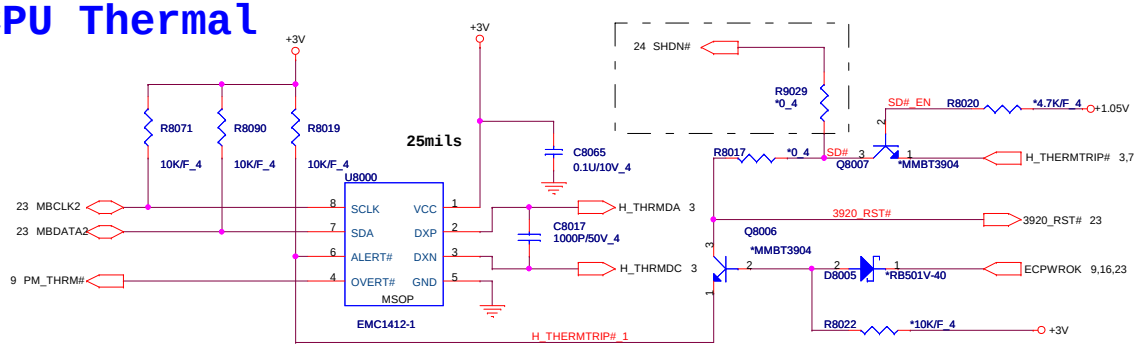

1.Level 1 Environment-related Substances Should NEVER be Used.
2.Purchase ink, paint, wire rods, and Molding resins only from the business Partners that Sony approves as Green Partners.

Quanta Computer Inc.	PROJECT : NM6	
Size	Document Number: Power Botton	Rev 1A
Date: Wednesday, November 04, 2009	Sheet 14 of 32	

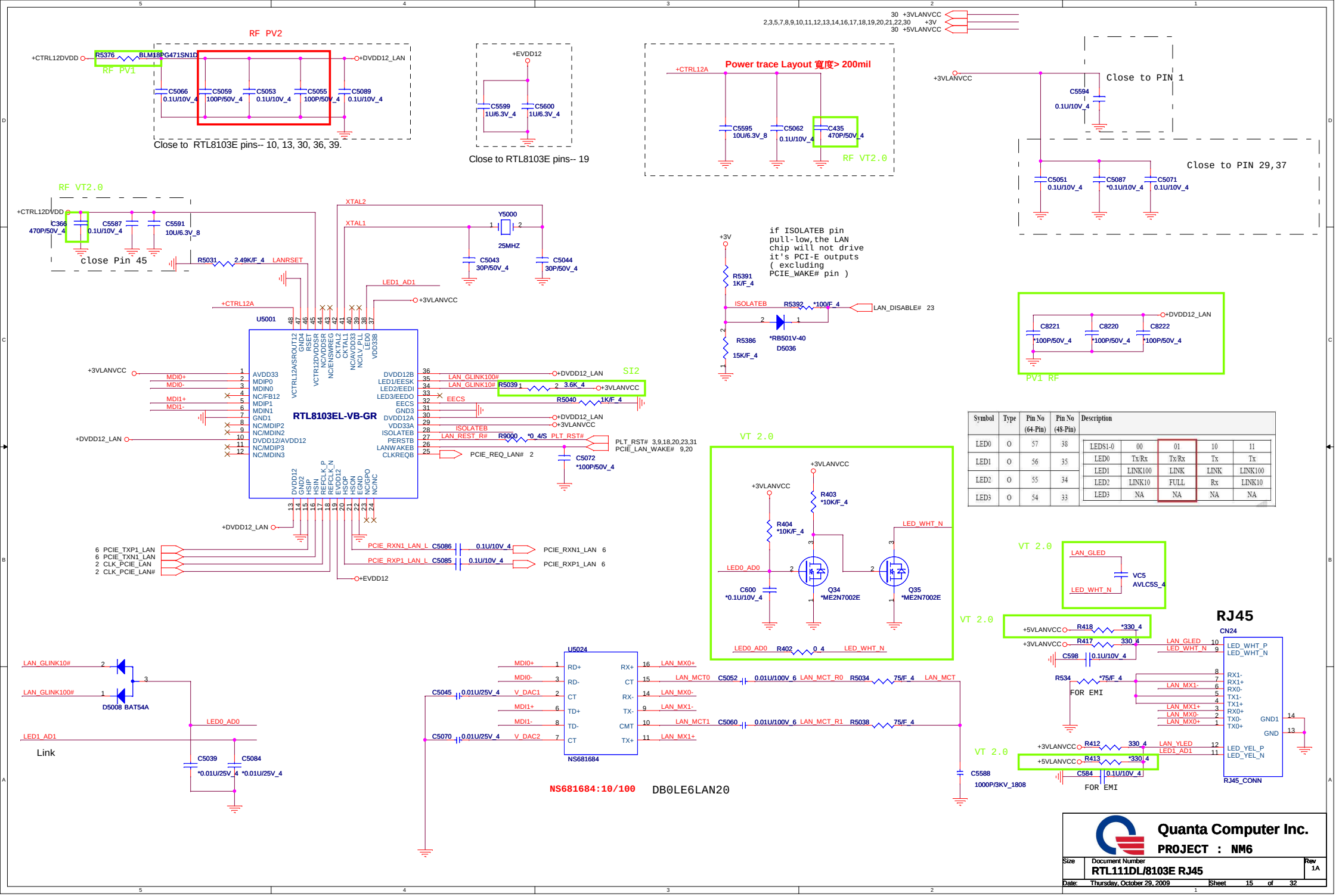

Symbol	Type	Pin No (64-Pin)	Pin No (48-Pin)	Description
LED0	O	57	38	
LED1	O	56	35	
LED2	O	55	34	
LED3	O	54	33	

LEDS1-0	00	01	10	11
LED0	Tx/Rx	Tx/Rx	Tx	Tx
LED1	LINK100	LINK	LINK	LINK100
LED2	LINK10	FULL	Rx	LINK10
LED3	NA	NA	NA	NA

Backlight Control(LDS)

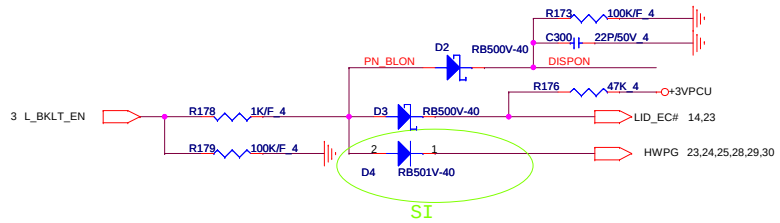

LCD POWER SWITCH

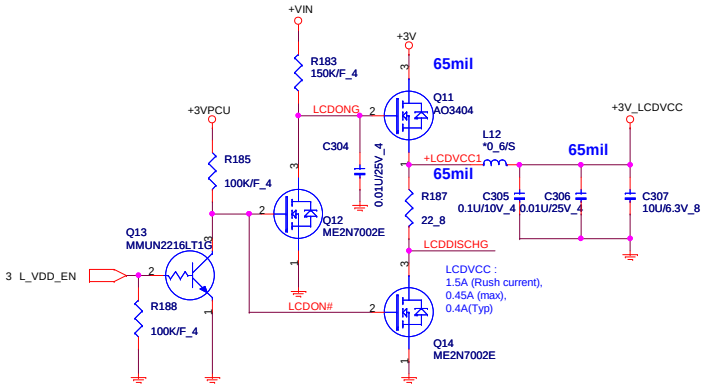

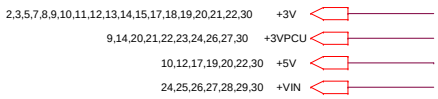

LED Panel(LDS)

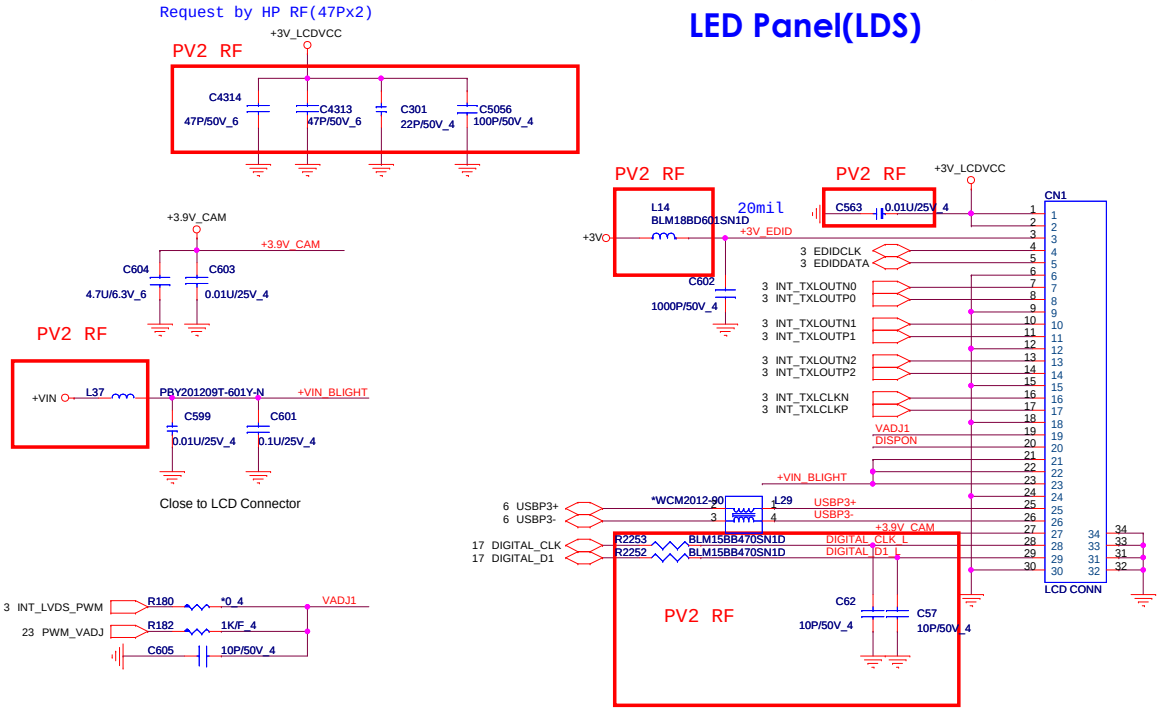

CAMERA POWER

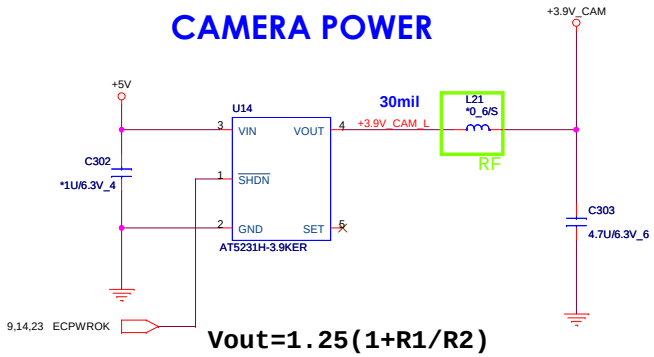

Quanta Computer Inc.	PROJECT : NM6	
Size	Document Number: LCD PANEL/CCD MODULE	Rev 1A
Date: Thursday, October 29, 2009	Sheet 16 of 32	

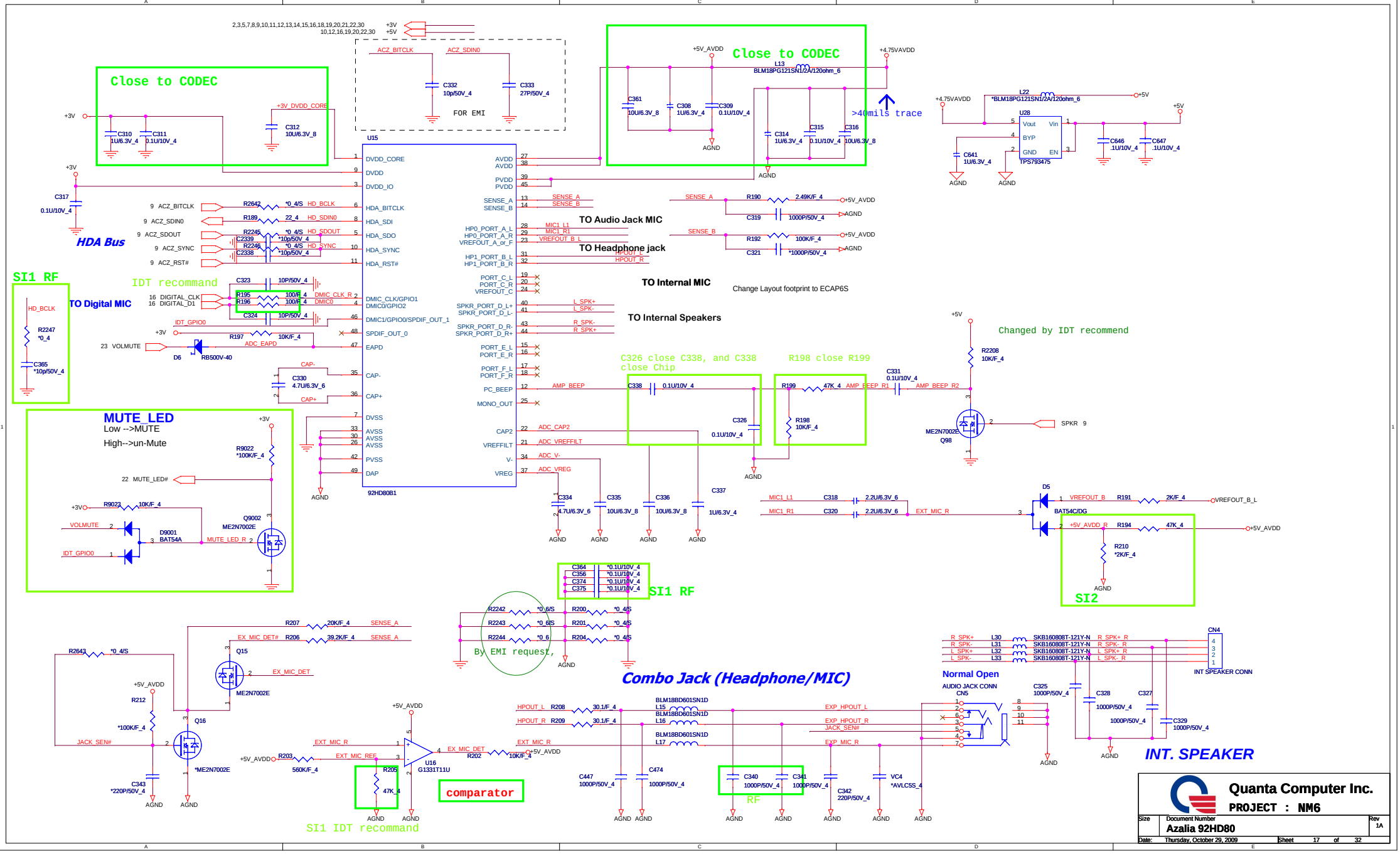
Close to CODEC
Close to CODEC
FOR EMI
U15
92HD80B1
HDA Bus
SI1 RF
IDT recommand
TO Digital MIC
MUTE_LED
Low -->MUTE
High-->un-Mute
TO Audio Jack MIC
TO Headphone jack
TO Internal MIC
TO Internal Speakers
Change Layout footprint to ECAP6S
Changed by IDT recommend
C326 close C338, and C338 close Chip
R198 close R199
>40mils trace
SI1 RF
By EMI request,
SI2
Combo Jack (Headphone/MIC)
Normal Open
INT. SPEAKER
comparator
SI1 IDT recommand
RF
Quanta Computer Inc.
PROJECT : NM6
Azalia 92HD80
Rev 1A
Date: Thursday, October 29, 2009
Sheet 17 of 32

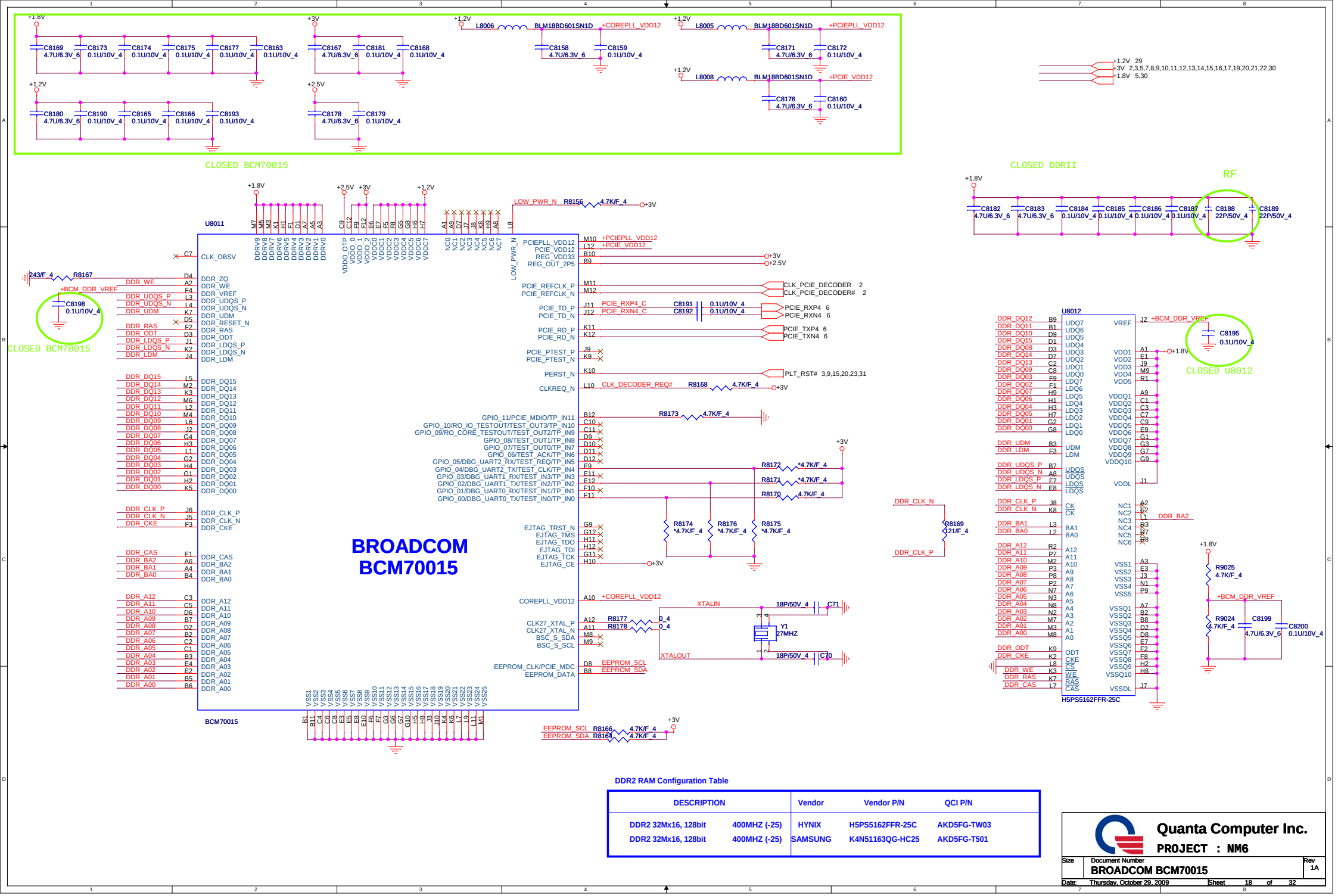

DDR2 RAM Configuration Table

DESCRIPTION		Vendor	Vendor P/N	QCI P/N
DDR2 32Mx16, 128bit	400MHZ (-25)	HYNIX	H5PS5162FFR-25C	AKD5FG-TW03
DDR2 32Mx16, 128bit	400MHZ (-25)	SAMSUNG	K4N51163QG-HC25	AKD5FG-T501

Quanta Computer Inc.

PROJECT : NM6

Size	Document Number	Rev
	BROADCOM BCM70015	1A

Date: Thursday, October 29, 2009 Sheet 18 of 32

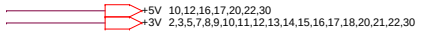

2.5" SATA HDD OR SSD(TOSHIBA)

DFHD20MR008

DC Current rating: 0.5 A

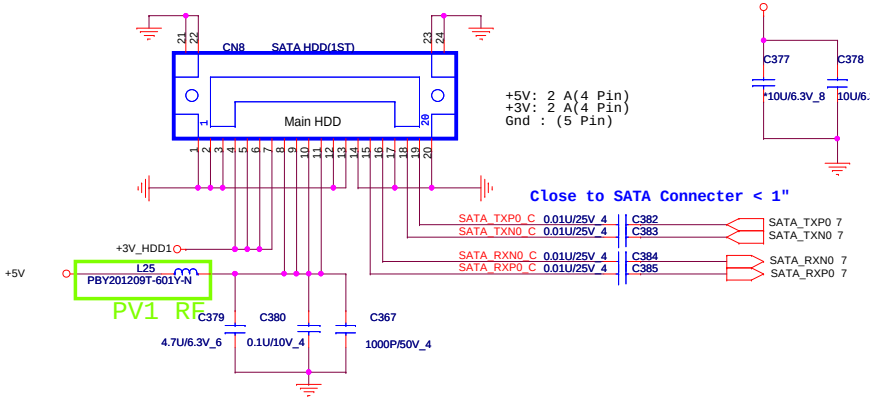

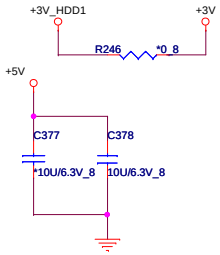

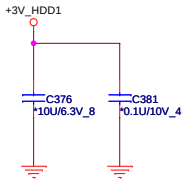

EMI spring

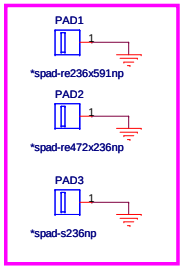

M/B Screw Hole

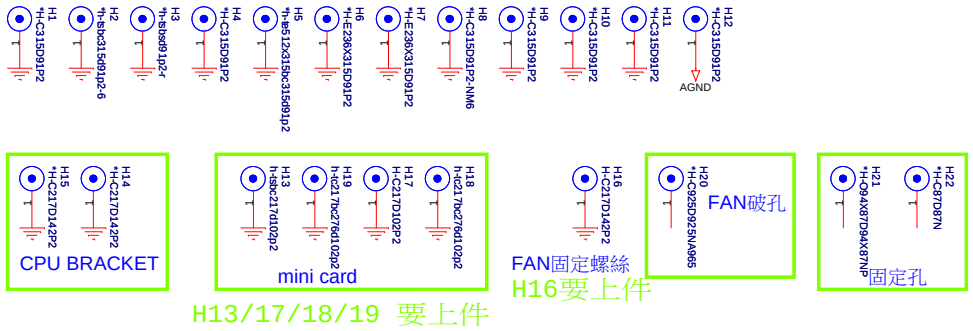

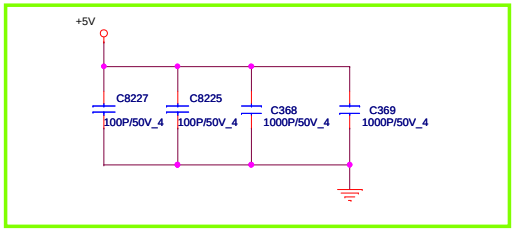

PV1 RF

Quanta Computer Inc.		
PROJECT : NM6		
Size	Document Number: SATA HDD/SCREW HOLE	Rev 1A
Date: Thursday, October 29, 2009	Sheet 19 of 32	

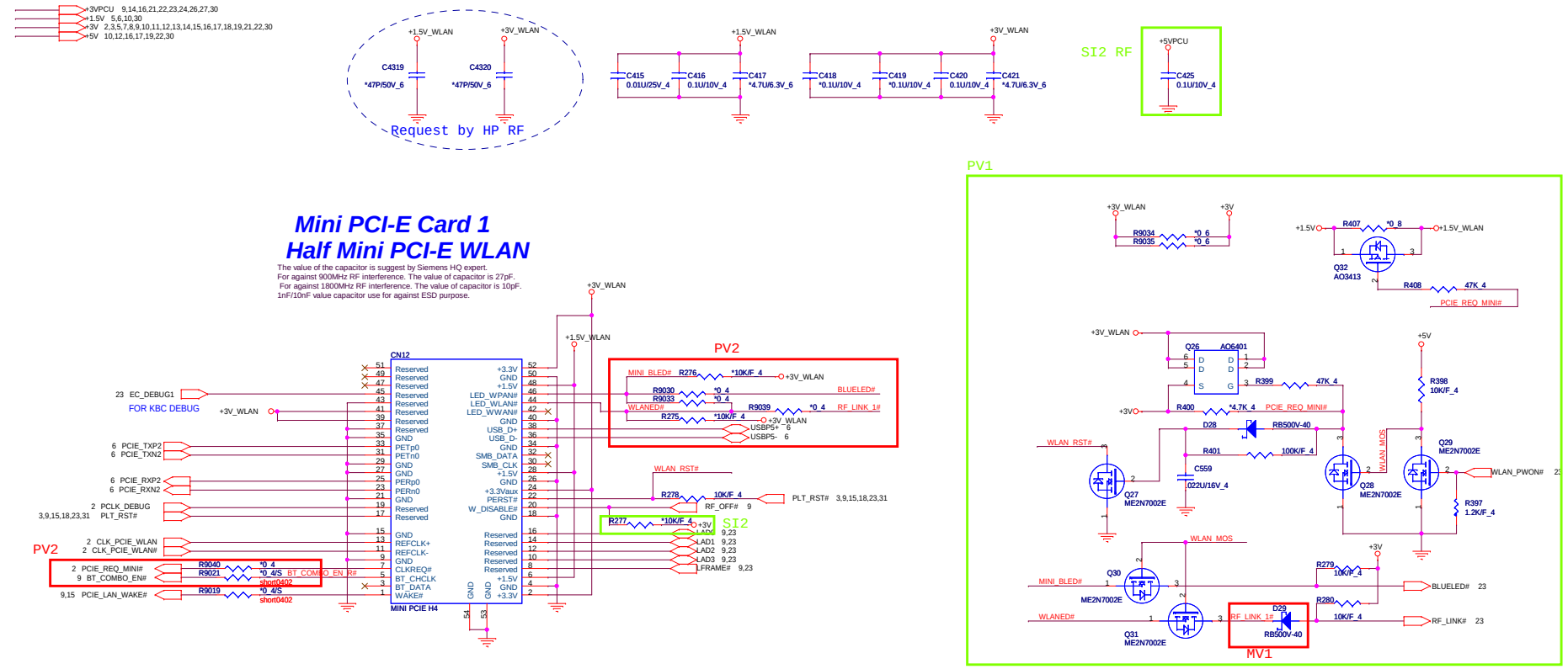

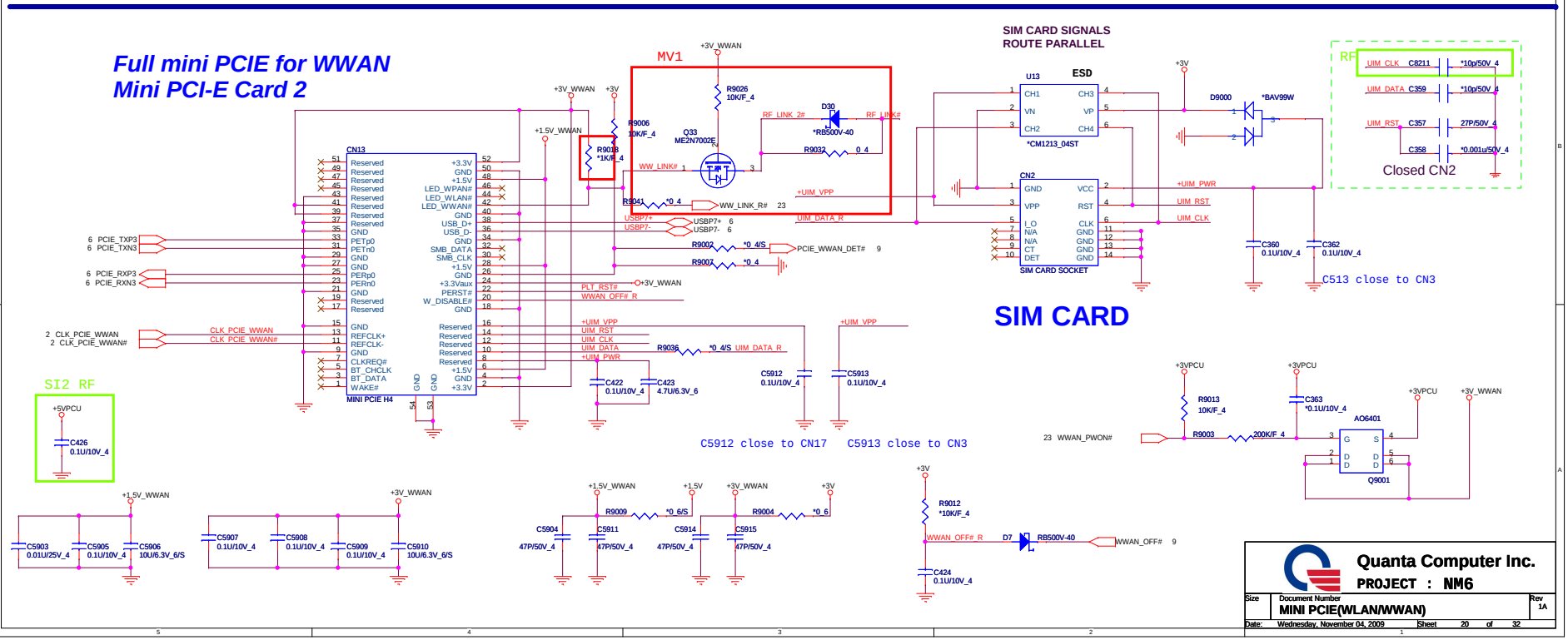

Quanta Computer Inc.		
PROJECT : NM6		
Size	Document Number: MINI PCIE(WLAN/WWAN)	Rev 1A
Date: Wednesday, November 04, 2009	Sheet 20 of 32	

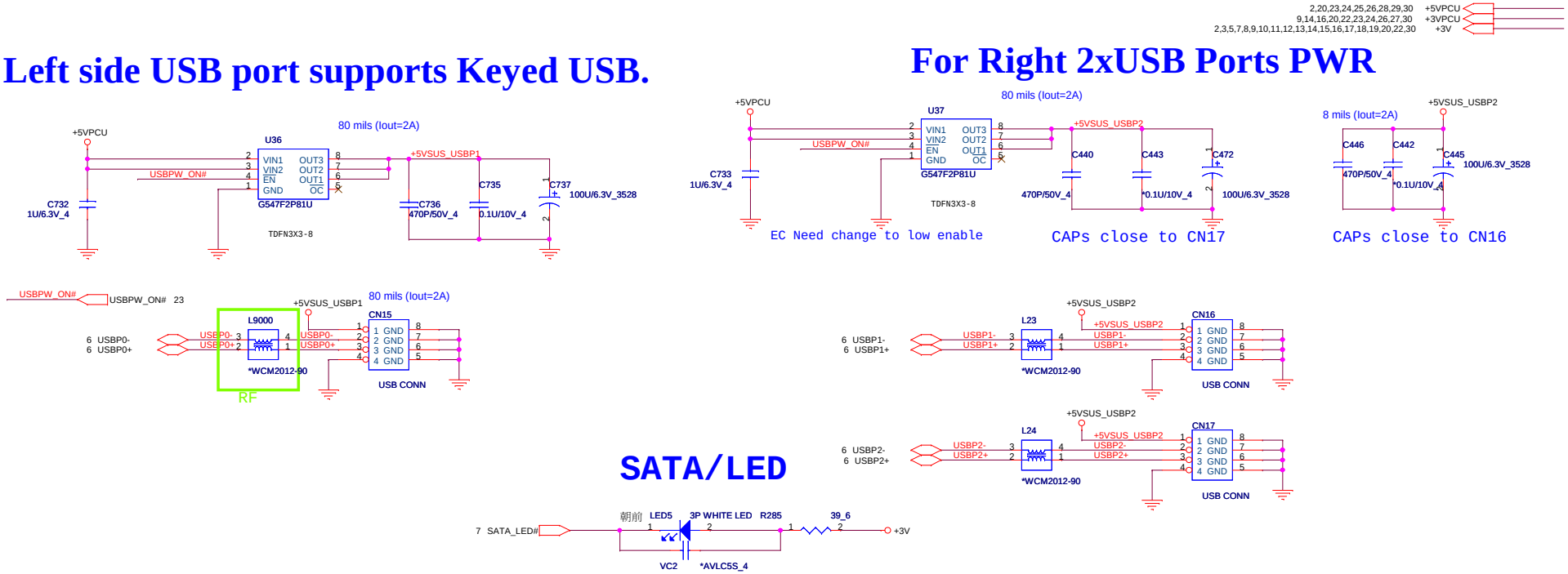

Quanta Computer Inc.

PROJECT : NM6

Size	Document Number	Rev
	USB Conn/LED/PWR BT	1A

Date: Thursday, October 29, 2009 Sheet 21 of 32

Keyboard(KBC)

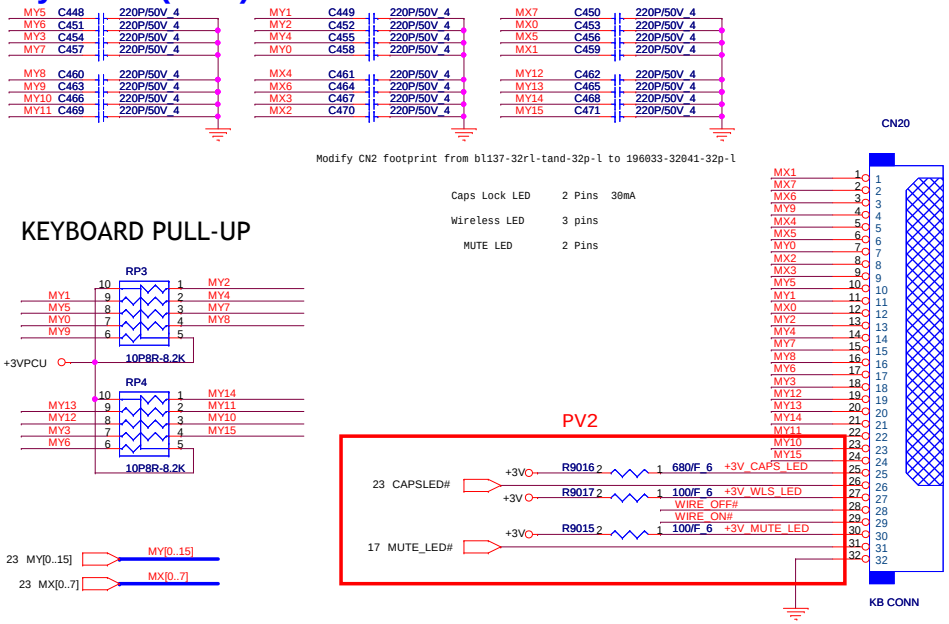

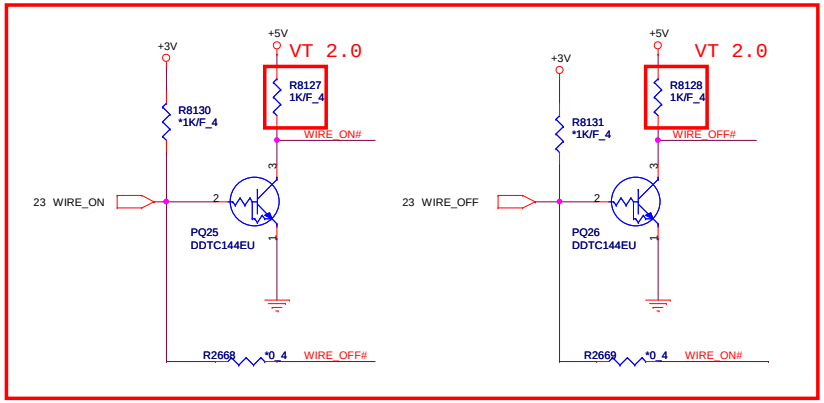

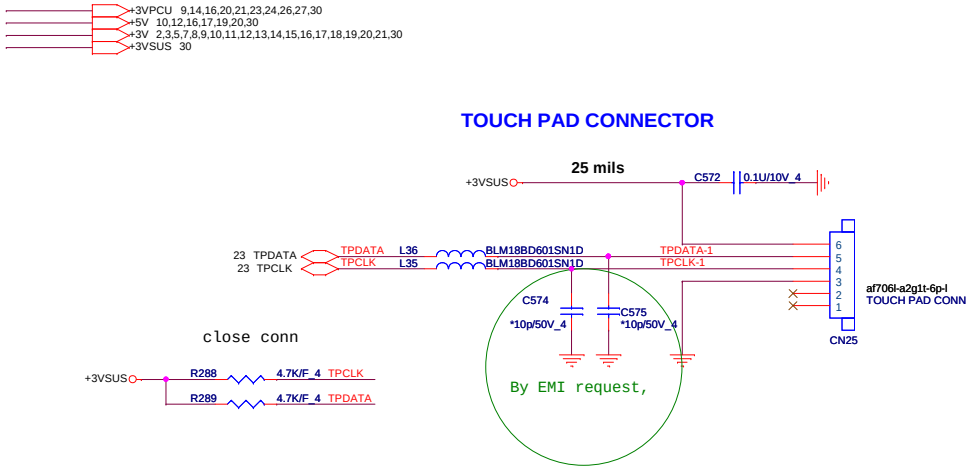

TOUCH SCREEN

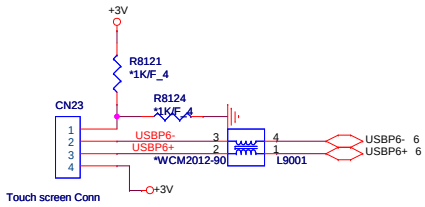

CPU FAN

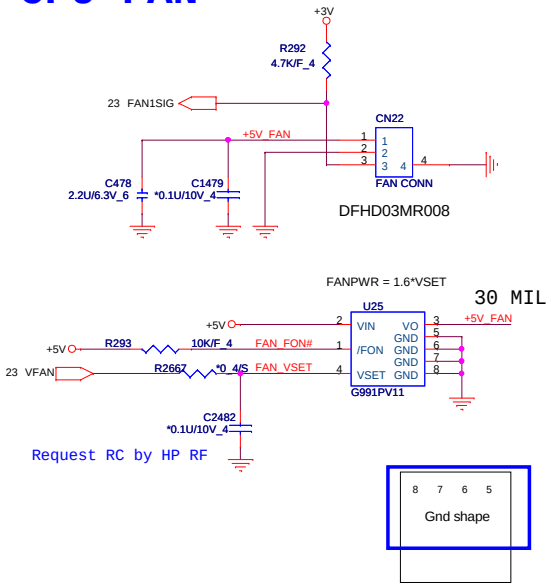

Quanta Computer Inc.

PROJECT : NM6

Size	Document Number	Rev
	KB/TP/BT/CPU FAN/TP SCREEN	1A

Date: Thursday, October 29, 2009 Sheet 22 of 32

Charge LED 3 pins

Pin 32 Pin 1

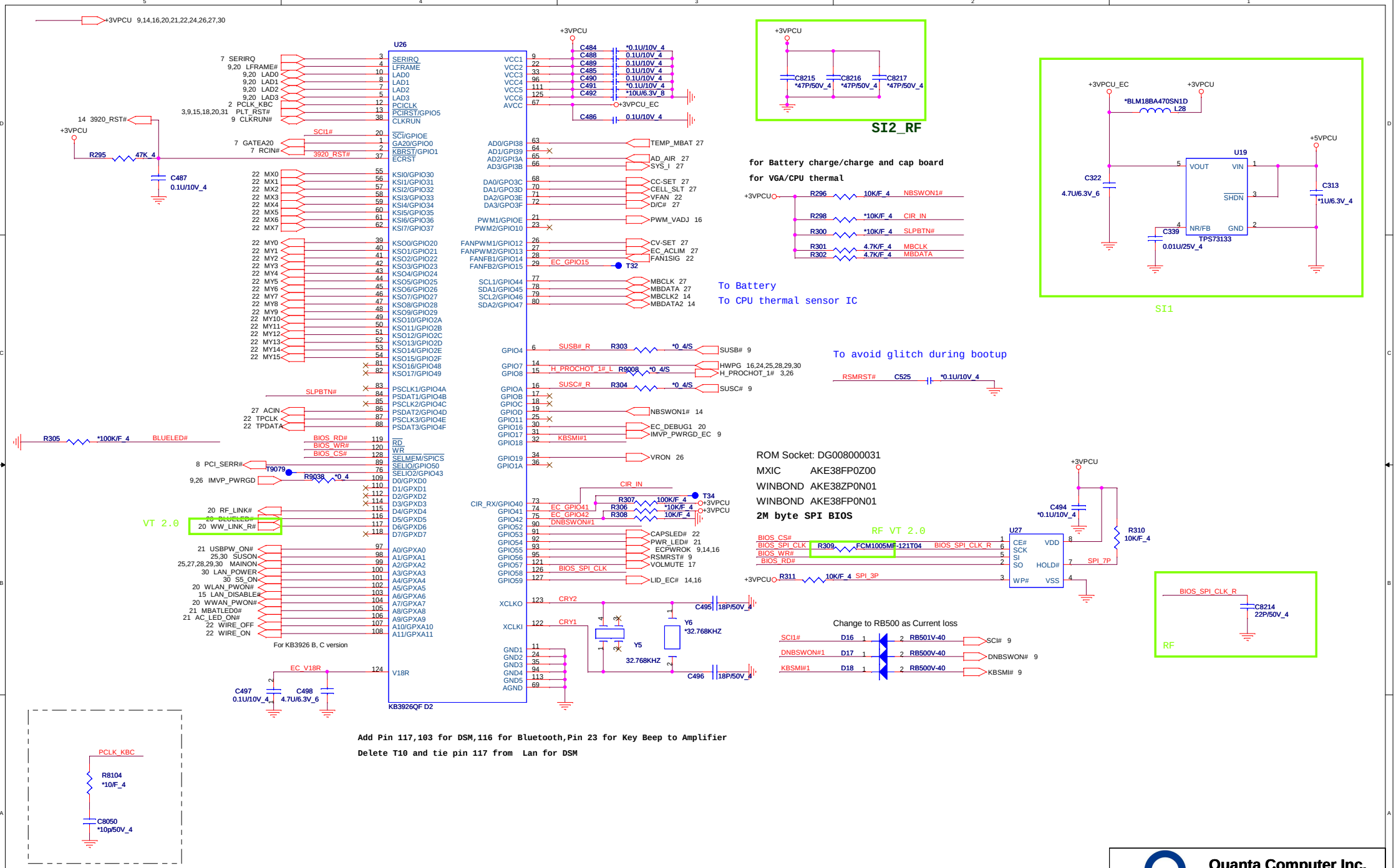

Quanta Computer Inc.

PROJECT : NM6

Size	Document Number	Rev
	KBC3926/ROM	1A

Date: Friday, October 30, 2009 Sheet 23 of 32

DC/DC +3V_ALW/+5V_ALW/+5V_ALW2 /+15V_ALW

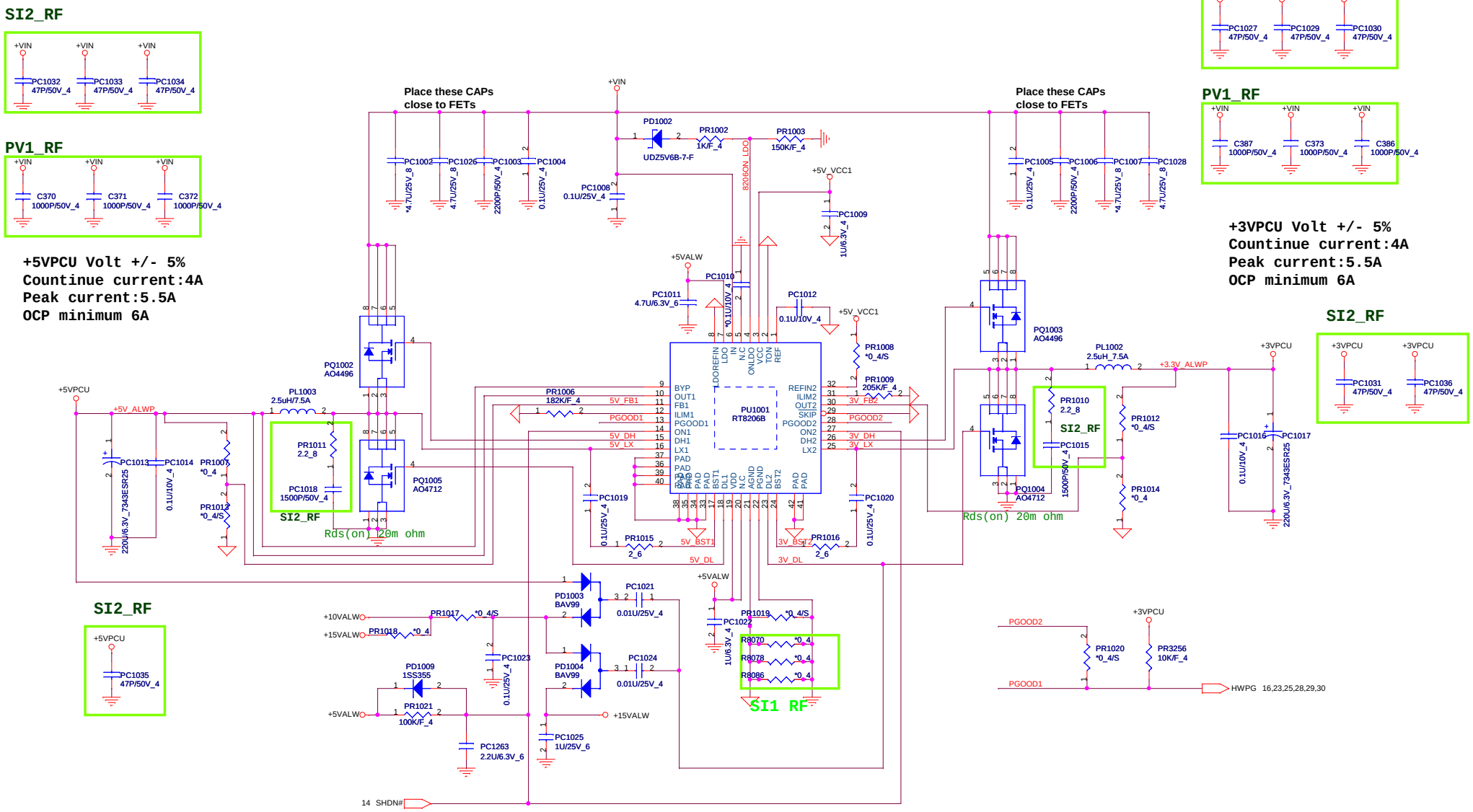

Quanta Computer Inc.

PROJECT : NM6

Size	Document Number	Rev
	3VPCU/5VPCU(RT8206)	1A

Date: Thursday, October 29, 2009 Sheet 24 of 32

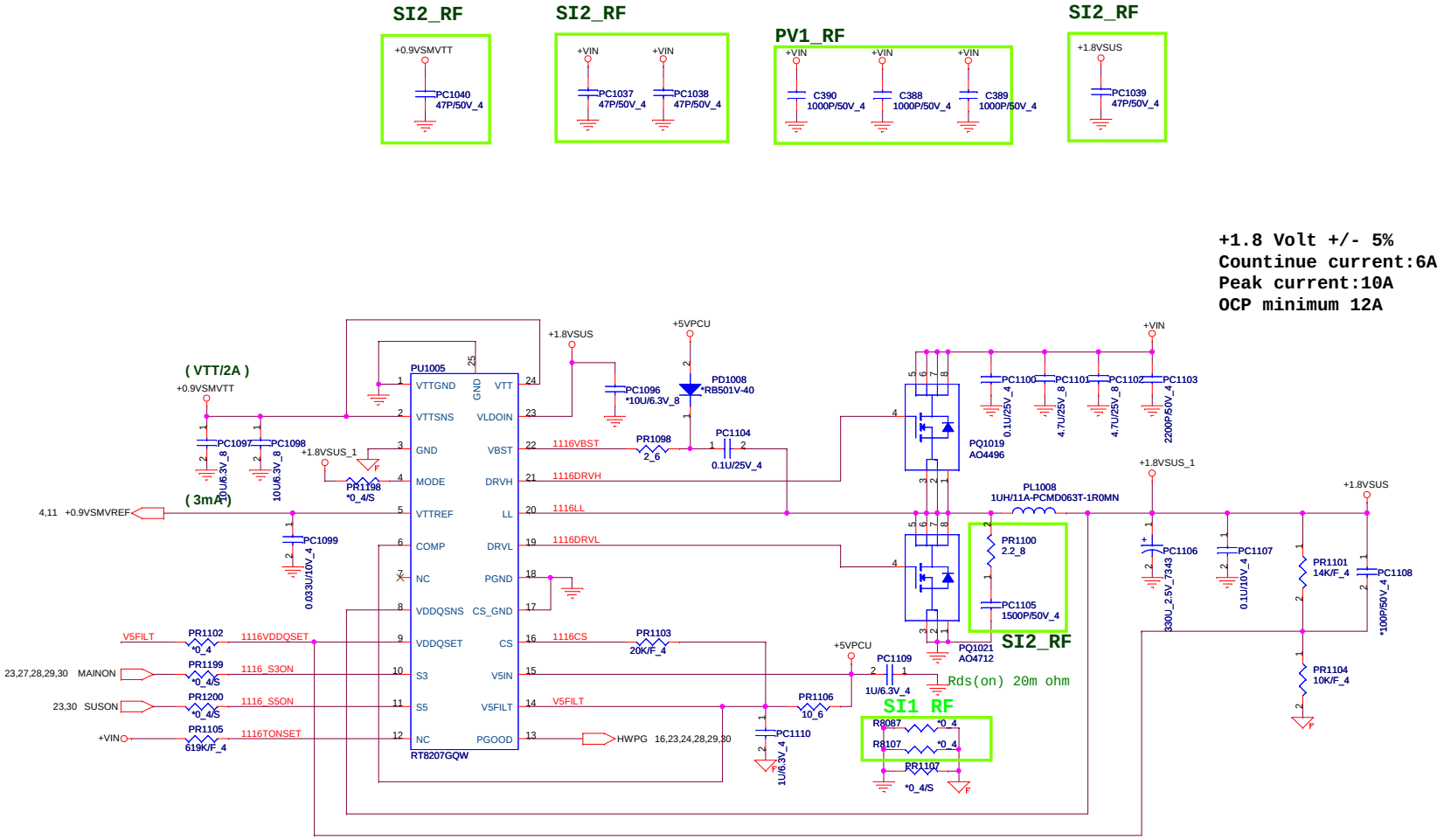

Quanta Computer Inc.

PROJECT : NM6

Size	Document Number	Rev
	DDR2 +1.8VSUS/+0.89V	1A

Date: Thursday, October 29, 2009 Sheet 25 of 32

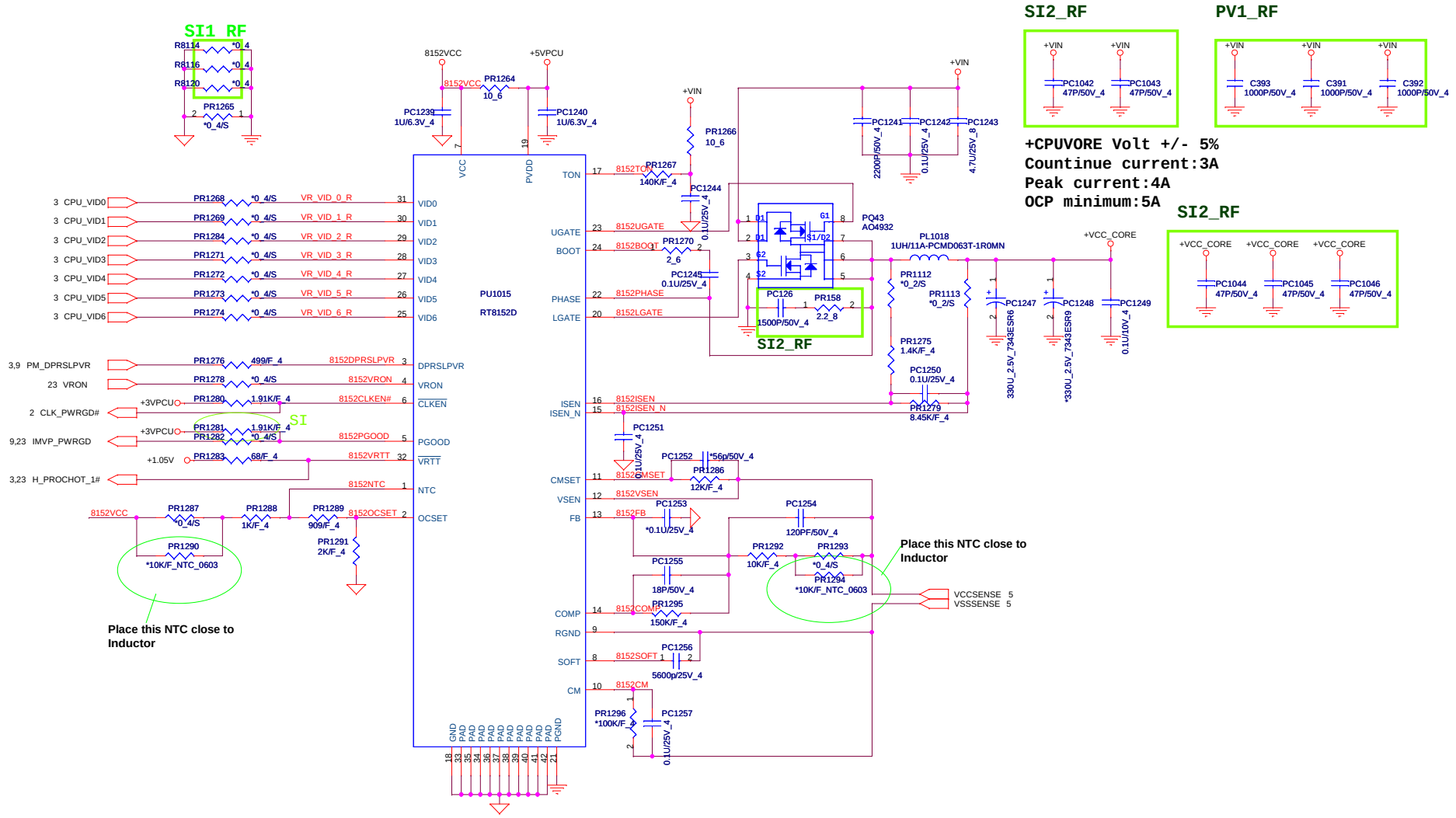

Quanta Computer Inc.

PROJECT : NM6

Size	Document Number	Rev
	Vcore(RT8152B)	1A

Date: Thursday, October 29, 2009 Sheet 26 of 32

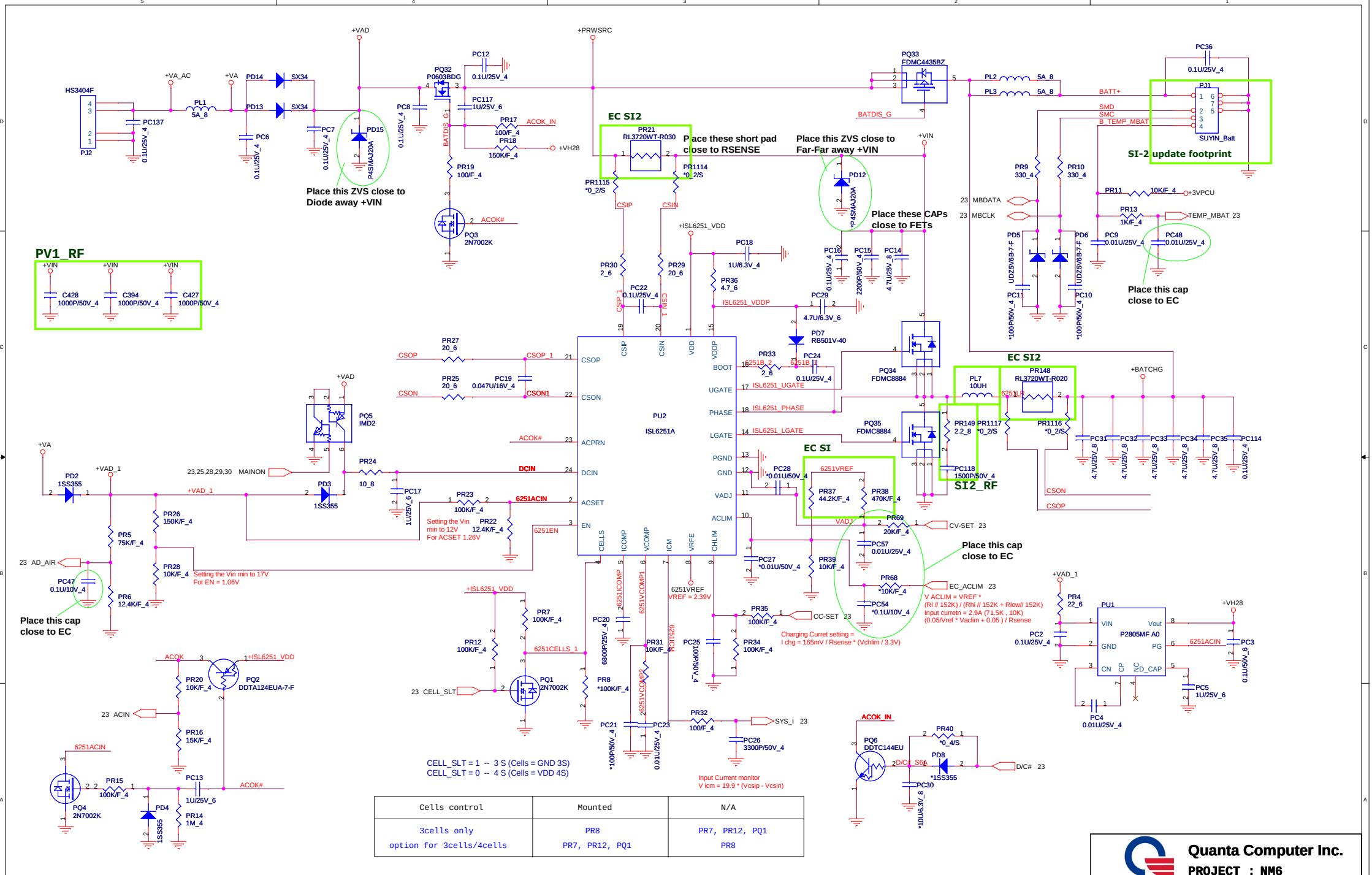

Cells control	Mounted	N/A
3cells only	PR8	PR7, PR12, PQ1
option for 3cells/4cells	PR7, PR12, PQ1	PR8

+VCC_GFX_CORE

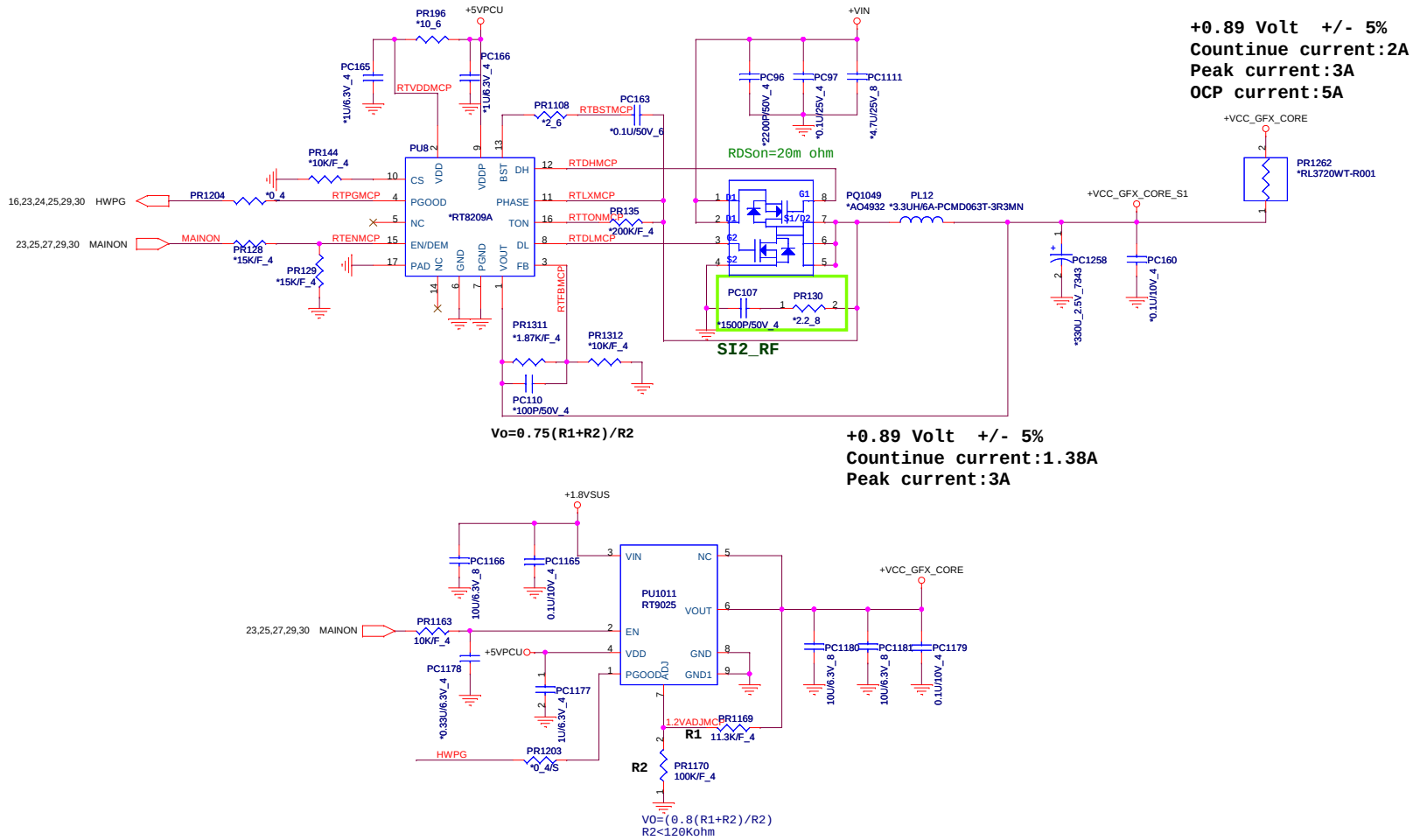

SI2_RF

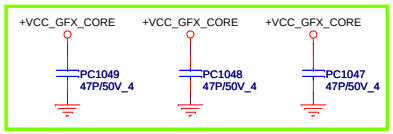

PV1_RF

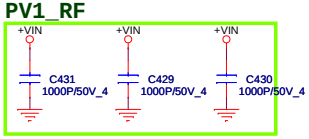

Quanta Computer Inc.		
PROJECT : NM6		
Size	Document Number: +1.05V/+1.5V (RT8204)	Rev 1A
Date: Thursday, October 29, 2009	Sheet 28 of 32	

VCCP1.05V

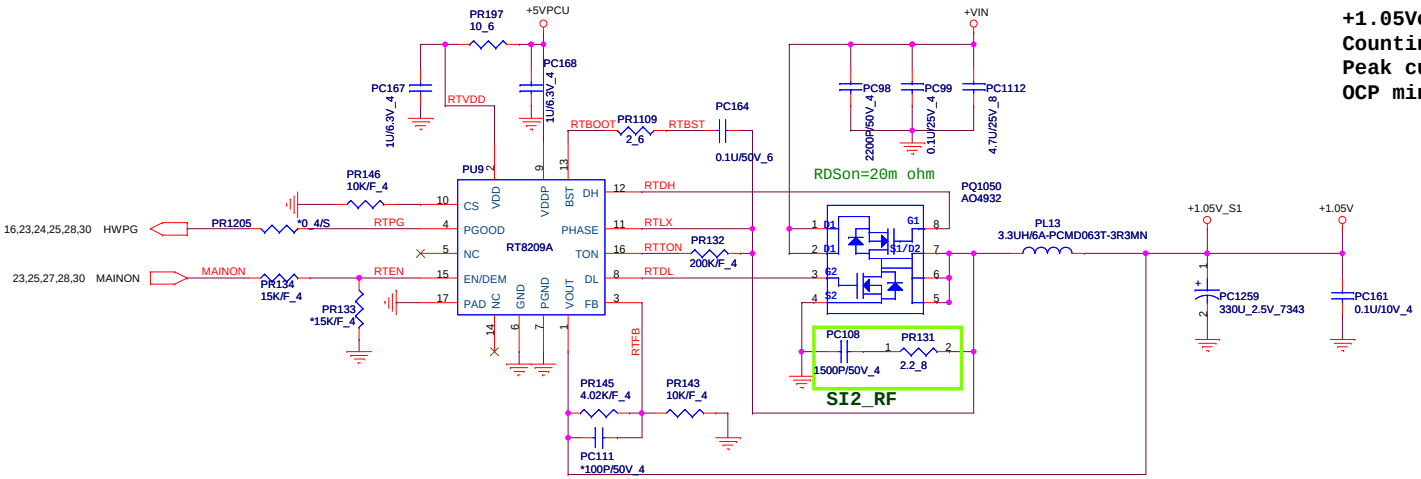

+1.05Volt +/- 5%
Countinue current:3A
Peak current:4A
OCP minimum:5A

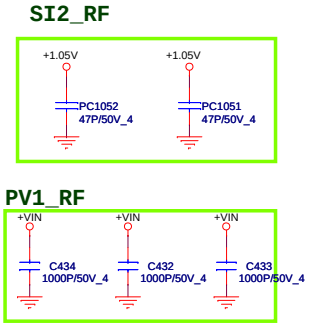

+1.2 Volt +/- 5%
Countinue current:0.8A
Peak current:3A

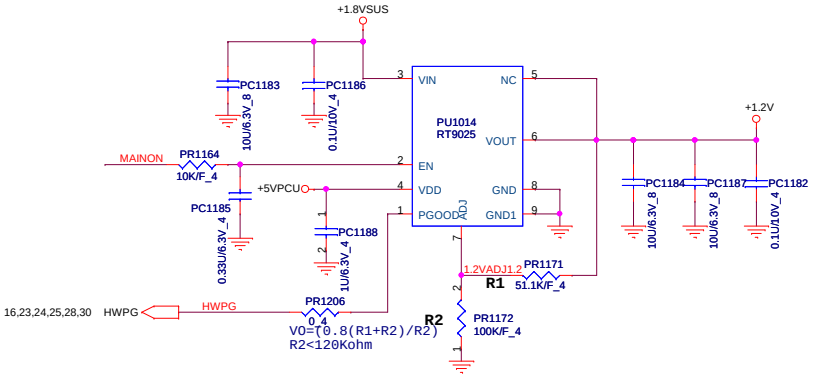

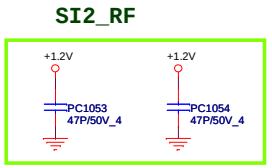

Quanta Computer Inc.
PROJECT : NM6

Size	Document Number	Rev
	+1.05V (RT8209A)	1A

Date: Thursday, October 29, 2009 Sheet 29 of 32

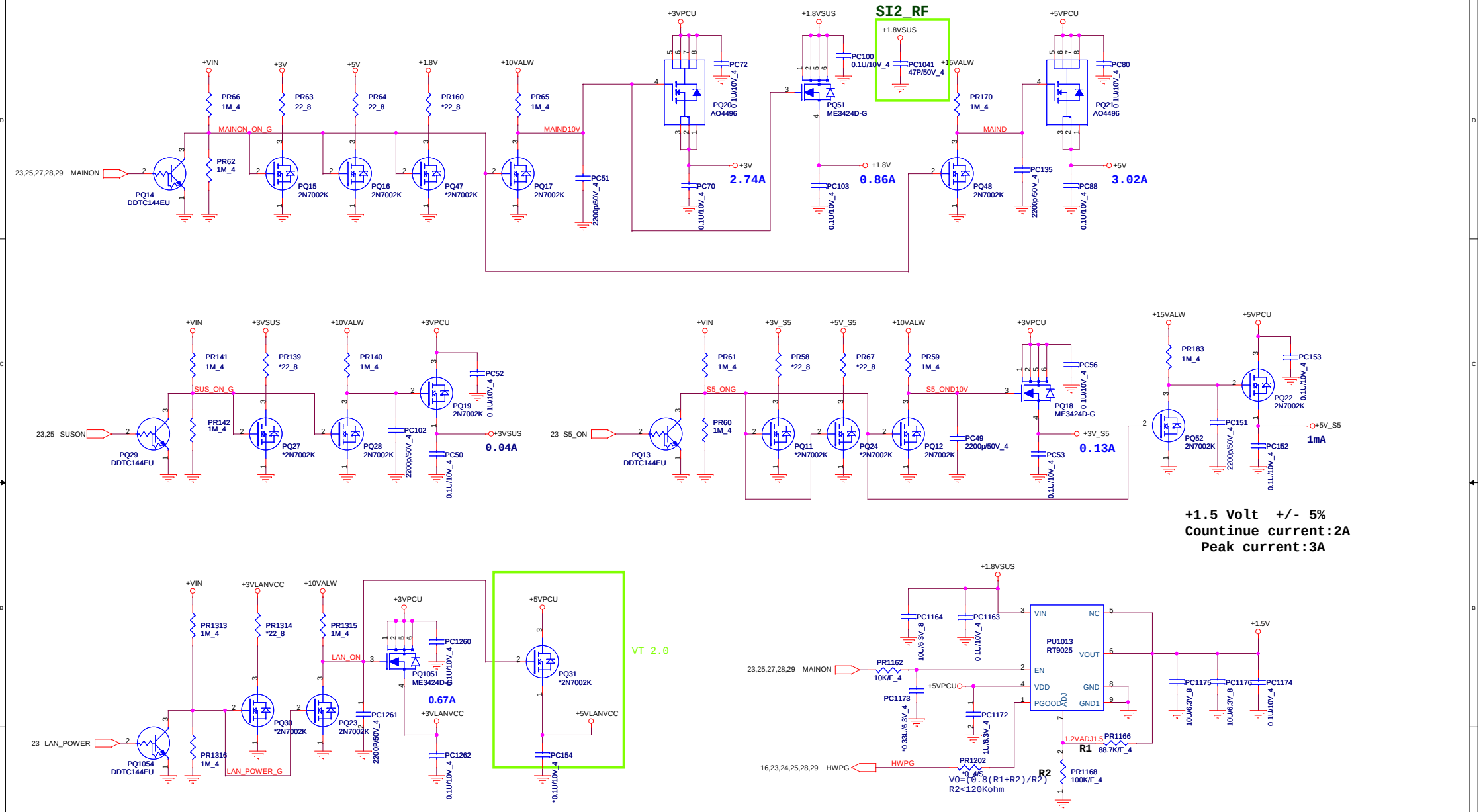

Quanta Computer Inc.		
PROJECT : NM6		
Size	Document Number: Discharge/LANVCC/+1.5V	Rev 1A
Date: Thursday, October 29, 2009	Sheet 30 of 32	

2,3,5,7,10,14,26,29 +1.05V

CPU XDP

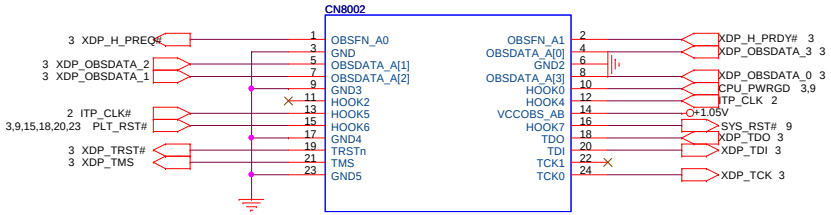

*196013-24011

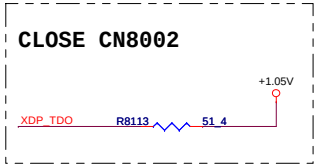

Quanta Computer Inc.		
PROJECT : NM6		
Size	Document Number: XDP	Rev 1A
Date: Thursday, October 29, 2009	Sheet 31 of 32	

Power up sequence

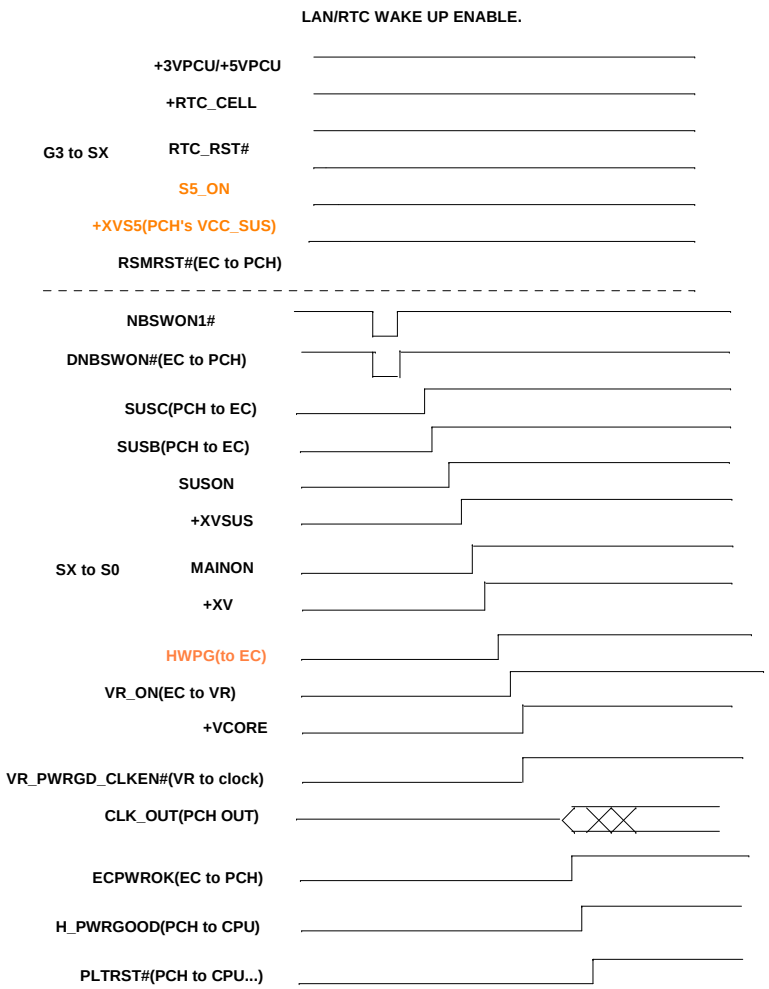

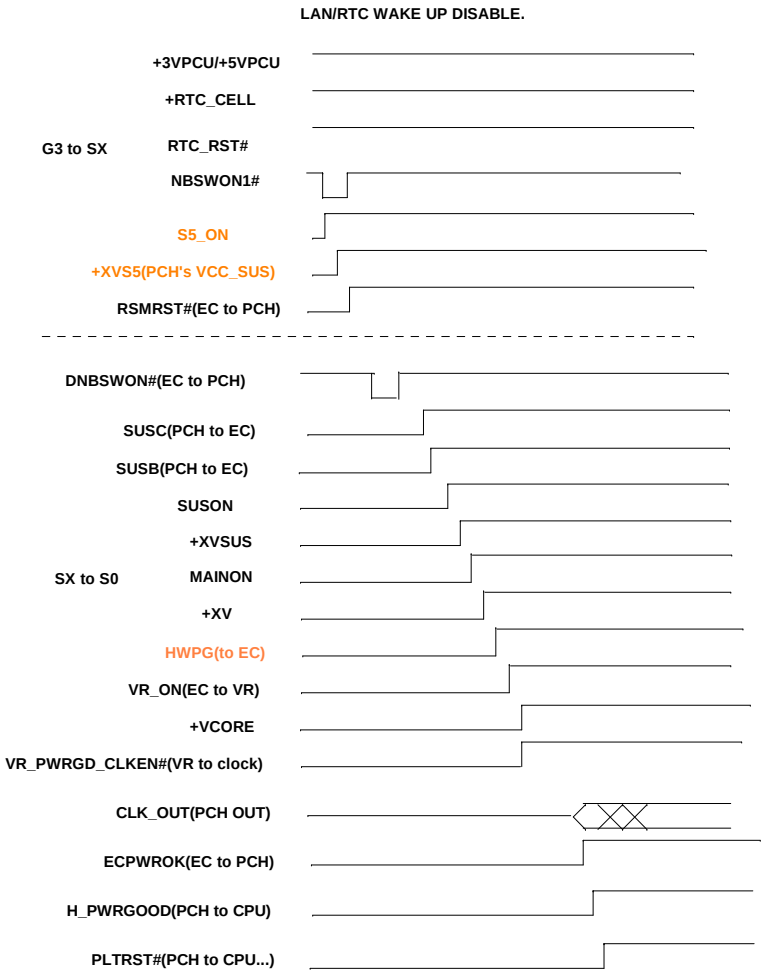

Quanta Computer Inc.		
PROJECT : NM6		
Size	Document Number: Power Sequence	Rev 1A
Date: Saturday, October 17, 2009	Sheet 32 of 32	