San Antonio 10E

PreMP BUILD

DATE	CHANGE NO.	REV

	EE	DATE	POWER	DATE
DRAWER				
DESIGN				
CHECK				
RESPONSIBLE				

SIZE = 3 VER :

FILE NAME : XXXX-XXXXXX-XX

P/N XXXXXXXXXXXX

INVENTEC

TITLE *Knockhill 10A*

SIZE	CODE	DOC. NUMBER	REV
A3	CS		X01

SHEET 1 OF 50

TABLE OF CONTENTS

PAGE

1.COVER PAGE
2.INDEX
3.BLOCK DIAGRAM
4.POWER SEQUENCE BLOCK
5-12.SYSTEM POWER
13.CLOCK GENERATOR
14.CPU(1/4)
15.CPU(2/4)
16.CPU(3/4)
17.CPU(4/4)
18.FAN & THERMAL CONTROLLER
19.N/B(1/5)
20.N/B(2/5)
21.N/B(3/5)
22.N/B(4/5)
23.N/B(5/5)
24.DDR2 DIMM0
25.DDR2 DIMM1
26.DDR2 PULL UP TERMINATOR
27.CRT
28.LCD CONN
29.S/B(1/5)
30.S/B(2/5)
31.S/B(3/5)

PAGE

32.RTC
33.CARDBUS CONTROLLER
34.PC CARD SLOT
35.1394 CONTROLLER
36.MINIPCI CONN
37.LAN CONTROLLER
38.RJ45 & TRANSFORMER
39.HDD CONN
40.ODD CONN
41.USB CONN
42.SUPER I/O
43.K/B & D/B CONN
44.AC97 CODEC
45.AUDIO AMP
46.MDC
47.SWITCH & LED (MB)
48.SWITCH & LED (DB)
49.USB & SVIDEO BOARD
50.TP BOARD

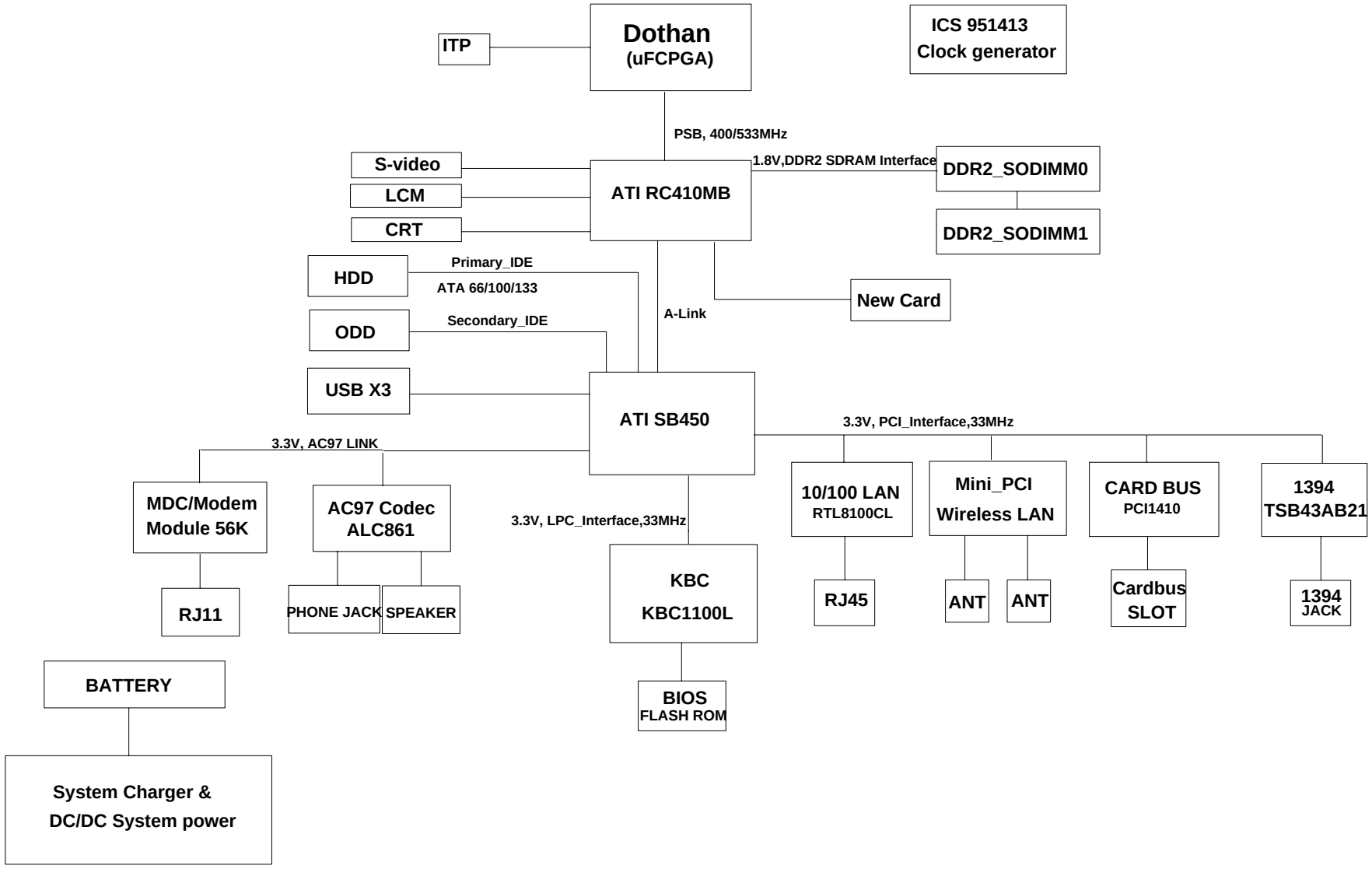

INVENTEC

TITLE Knockhill 10A

SIZE	CODE	DOC. NUMBER	REV
A3	CS	Model_No	X01

CHANGE by Drawer_Name 20-Jul-2005

SHEET 3 OF 50

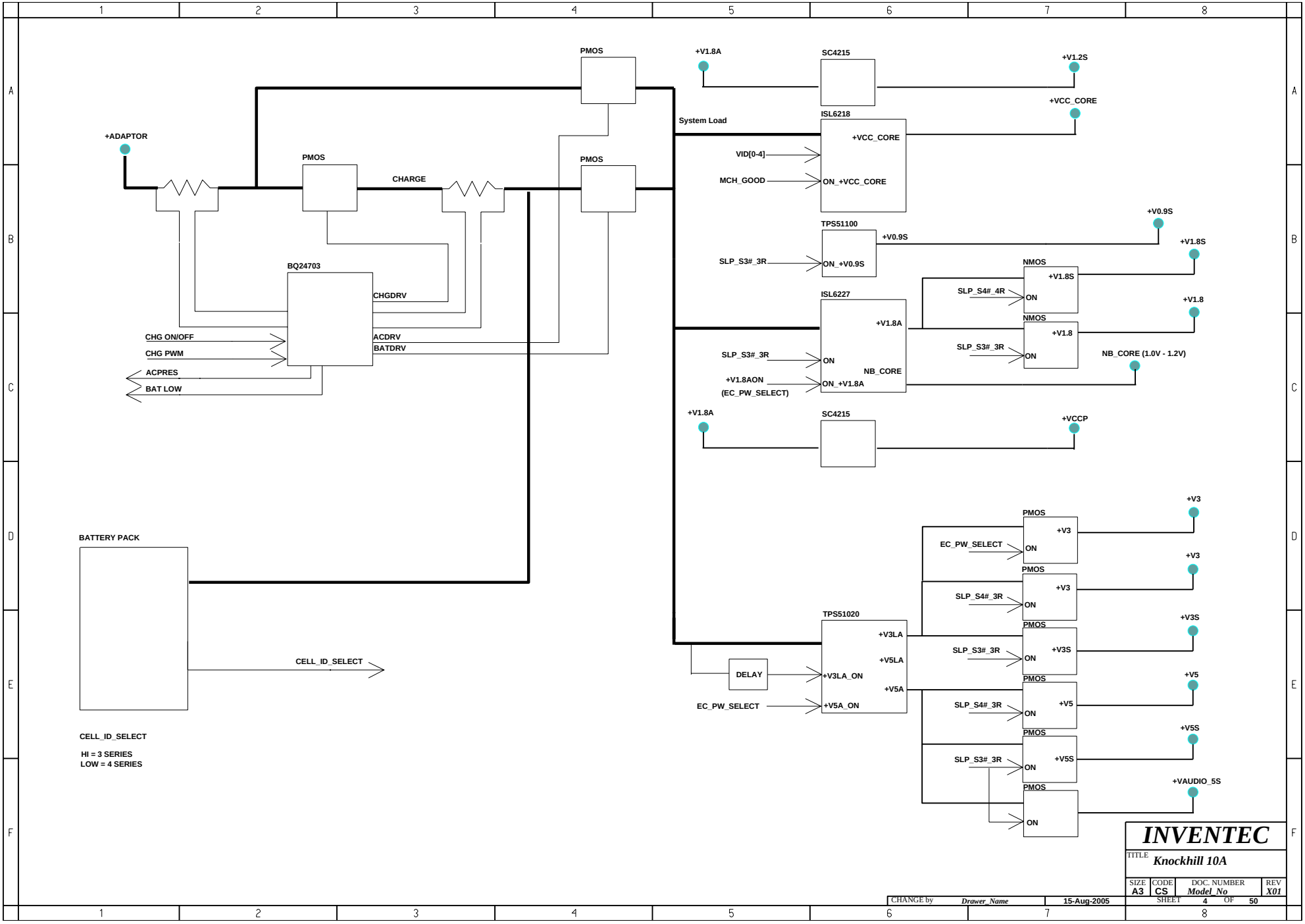
+ADAPTOR
PMOS
CHARGE
PMOS
PMOS
BQ24703
CHGDRV
CHG ON/OFF
CHG PWM
ACPRES
BAT LOW
ACDRV
BATDRV
BATTERY PACK
CELL_ID_SELECT
CELL_ID_SELECT
HI = 3 SERIES
LOW = 4 SERIES
+V1.8A
SC4215
+V1.2S
+VCC_CORE
System Load
ISL6218
+VCC_CORE
VID[0-4]
MCH_GOOD
ON_+VCC_CORE
TPS51100
+V0.9S
+V0.9S
SLP_S3#_3R
ON_+V0.9S
+V1.8S
NMOS
+V1.8S
SLP_S4#_4R
ON
+V1.8
NMOS
+V1.8
SLP_S3#_3R
ON
ISL6227
+V1.8A
SLP_S3#_3R
ON
NB_CORE
+V1.8AON
(EC_PW_SELECT)
ON_+V1.8A
NB_CORE (1.0V - 1.2V)
+V1.8A
SC4215
+VCCP
+V3
PMOS
+V3
EC_PW_SELECT
ON
+V3
PMOS
+V3
SLP_S4#_3R
ON
TPS51020
+V3S
PMOS
+V3S
SLP_S3#_3R
ON
+V3LA
+V5LA
+V5A
DELAY
+V3LA_ON
+V5A_ON
EC_PW_SELECT
+V5
PMOS
+V5
SLP_S4#_3R
ON
+V5S
PMOS
+V5S
SLP_S3#_3R
ON
+VAUDIO_5S
PMOS
ON
INVENTEC
TITLE
Knockhill 10A
SIZE
A3
CODE
CS
DOC. NUMBER
Model_No
REV
X01
CHANGE by
Drawer_Name
15-Aug-2005
SHEET
4
OF
50

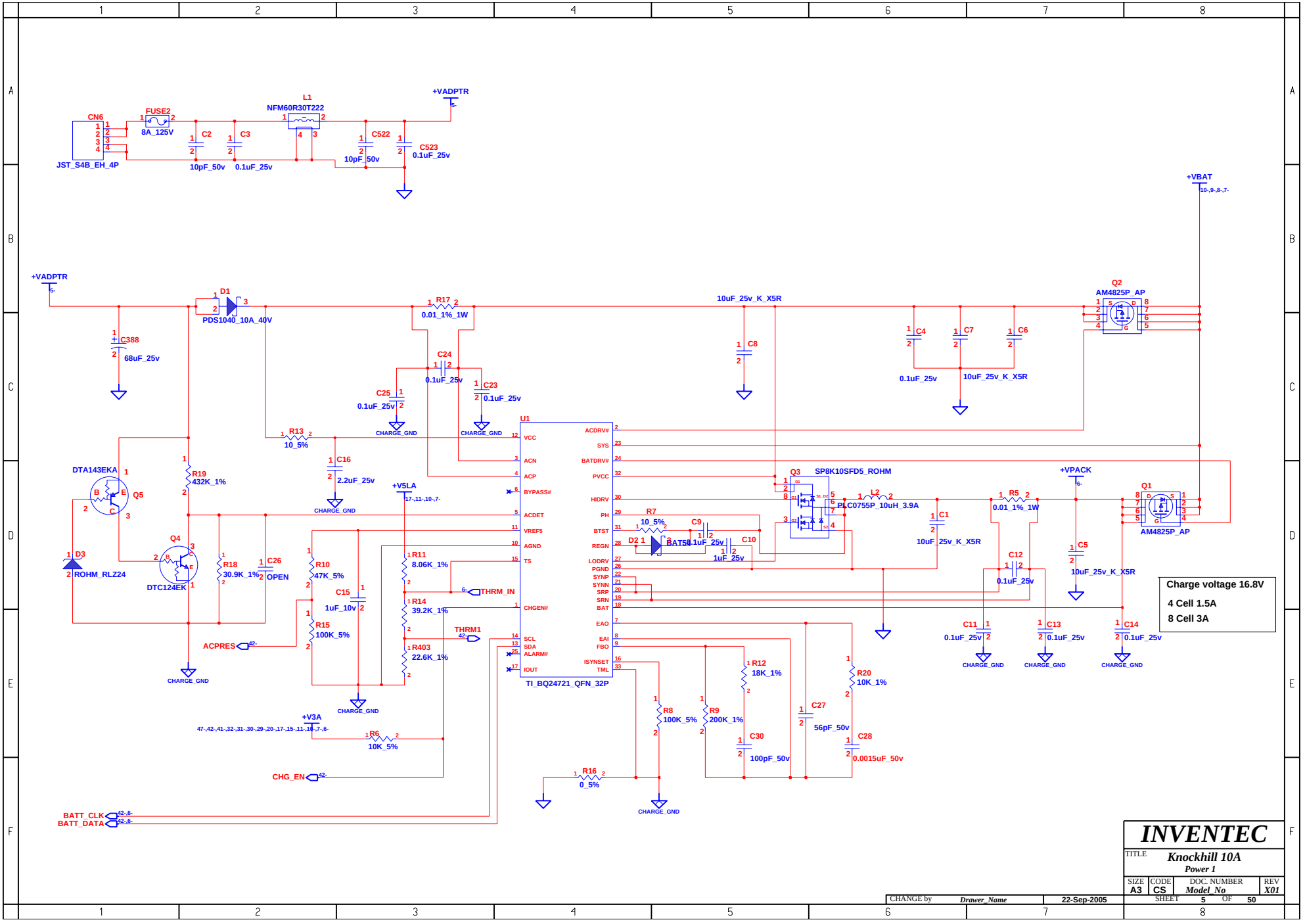
CN6
JST_S4B_EH_4P
FUSE2
8A_125V
C2
10pF_50v
C3
0.1uF_25v
L1
NFM60R30T222
C522
10pF_50v
C523
0.1uF_25v
+VADPTR
+VADPTR
C388
68uF_25v
D1
PDS1040_10A_40V
R17
0.01_1%_1W
C24
0.1uF_25v
C25
0.1uF_25v
C23
0.1uF_25v
CHARGE_GND
R13
10_5%
C16
2.2uF_25v
10uF_25v_K_X5R
C8
C4
0.1uF_25v
C7
10uF_25v_K_X5R
C6
Q2
AM4825P_AP
+VBAT
DTA143EKA
Q5
R19
432K_1%
Q4
DTC124EK
D3
ROHM_RLZ24
R18
30.9K_1%
C26
OPEN
+V5LA
R10
47K_5%
C15
1uF_10v
R15
100K_5%
ACPRES
R11
8.06K_1%
R14
39.2K_1%
R403
22.6K_1%
THRM_IN
THRM1
+V3A
R6
10K_5%
CHG_EN
BATT_CLK
BATT_DATA
U1
TI_BQ24721_QFN_32P
VCC
ACN
ACP
BYPASS#
ACDET
VREF5
AGND
TS
CHGEN#
SCL
SDA
ALARM#
IOUT
ACDRV#
SYS
BATDRV#
PVCC
HIDRV
PH
BTST
REGN
LODRV
PGND
SYNP
SYNN
SRP
SRN
BAT
EAO
EAI
FBO
ISYNSET
TML
R7
10_5%
C9
0.1uF_25v
C10
1uF_25v
D2
BAT54
R8
100K_5%
R9
200K_1%
R12
18K_1%
C30
100pF_50v
C27
56pF_50v
R20
10K_1%
C28
0.0015uF_50v
R16
0_5%
Q3
SP8K10SFD5_ROHM
L2
PLC0755P_10uH_3.9A
C1
10uF_25v_K_X5R
R5
0.01_1%_1W
C12
0.1uF_25v
+VPACK
C5
10uF_25v_K_X5R
Q1
AM4825P_AP
C11
0.1uF_25v
C13
0.1uF_25v
C14
0.1uF_25v
Charge voltage 16.8V
4 Cell 1.5A
8 Cell 3A
INVENTEC
TITLE
Knockhill 10A
Power 1
SIZE A3
CODE CS
DOC. NUMBER Model_No
REV X01
SHEET 5 OF 50
CHANGE by Drawer_Name
22-Sep-2005

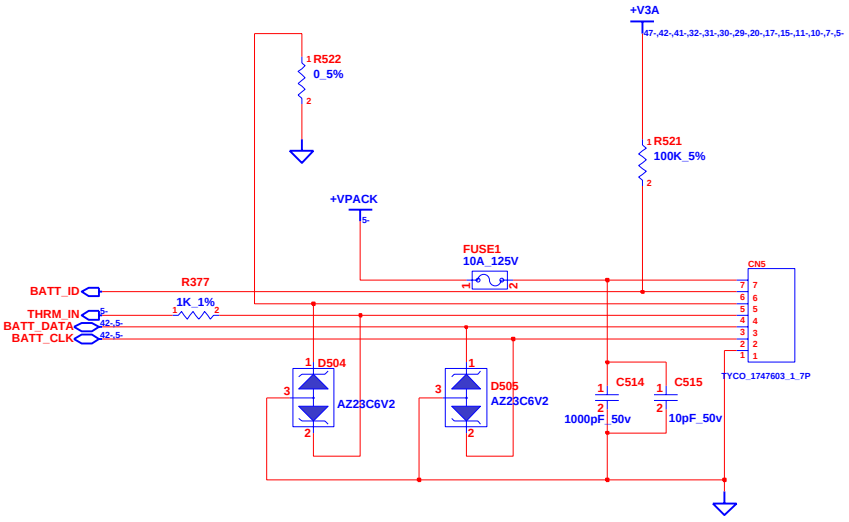

INVENTEC

TITLE Knockhill 10A
Power 2

SIZE	CODE	DOC. NUMBER	REV
A3	CS	Model_No	X01

CHANGE by Drawer_Name 22-Apr-2005

SHEET 6 OF 50

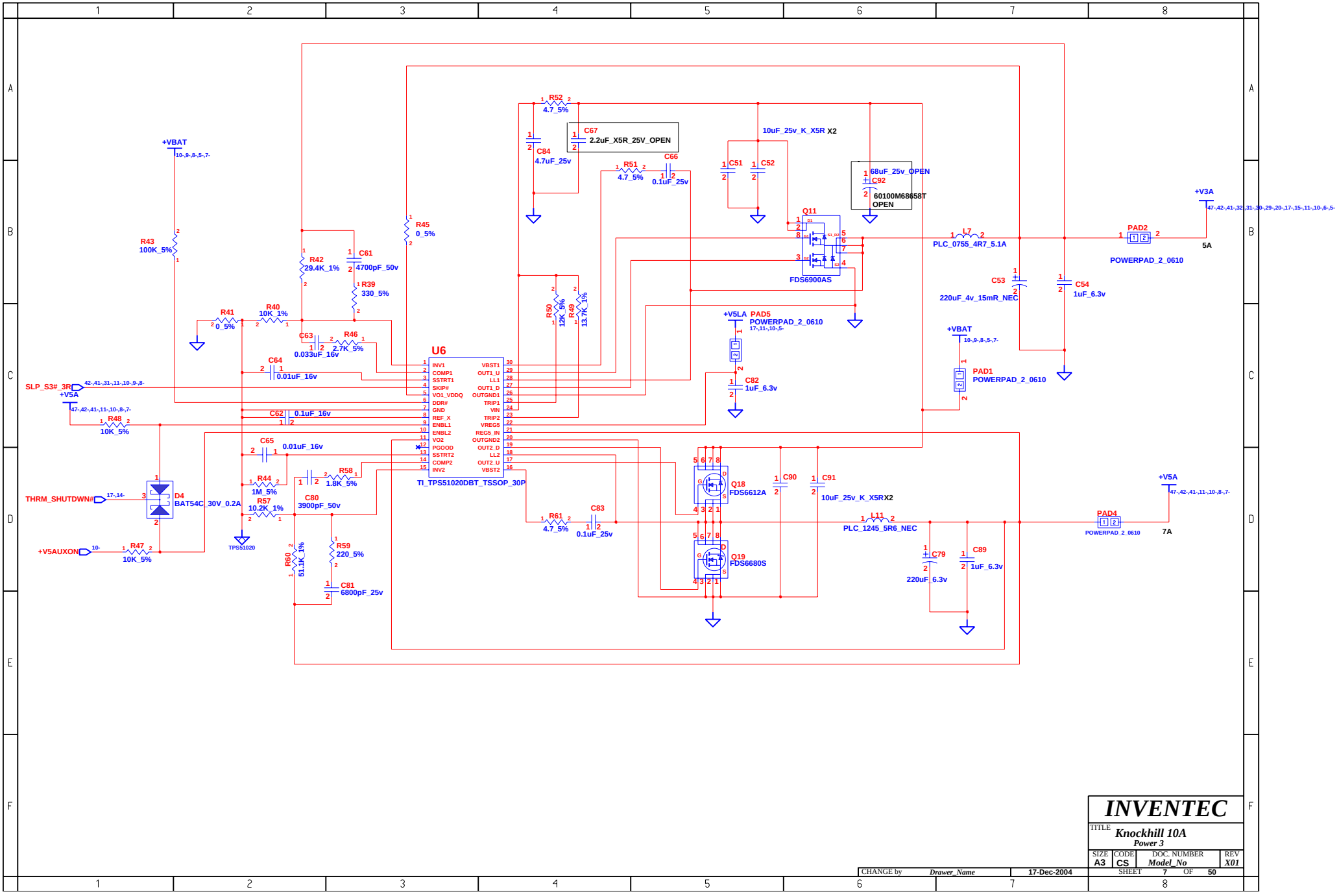

INVENTEC

TITLE *Knockhill 10A*
Power 3

SIZE	CODE	DOC. NUMBER	REV
A3	CS	*Model_No*	*X01*

SHEET 7 OF 50

CHANGE by	*Drawer_Name*	17-Dec-2004

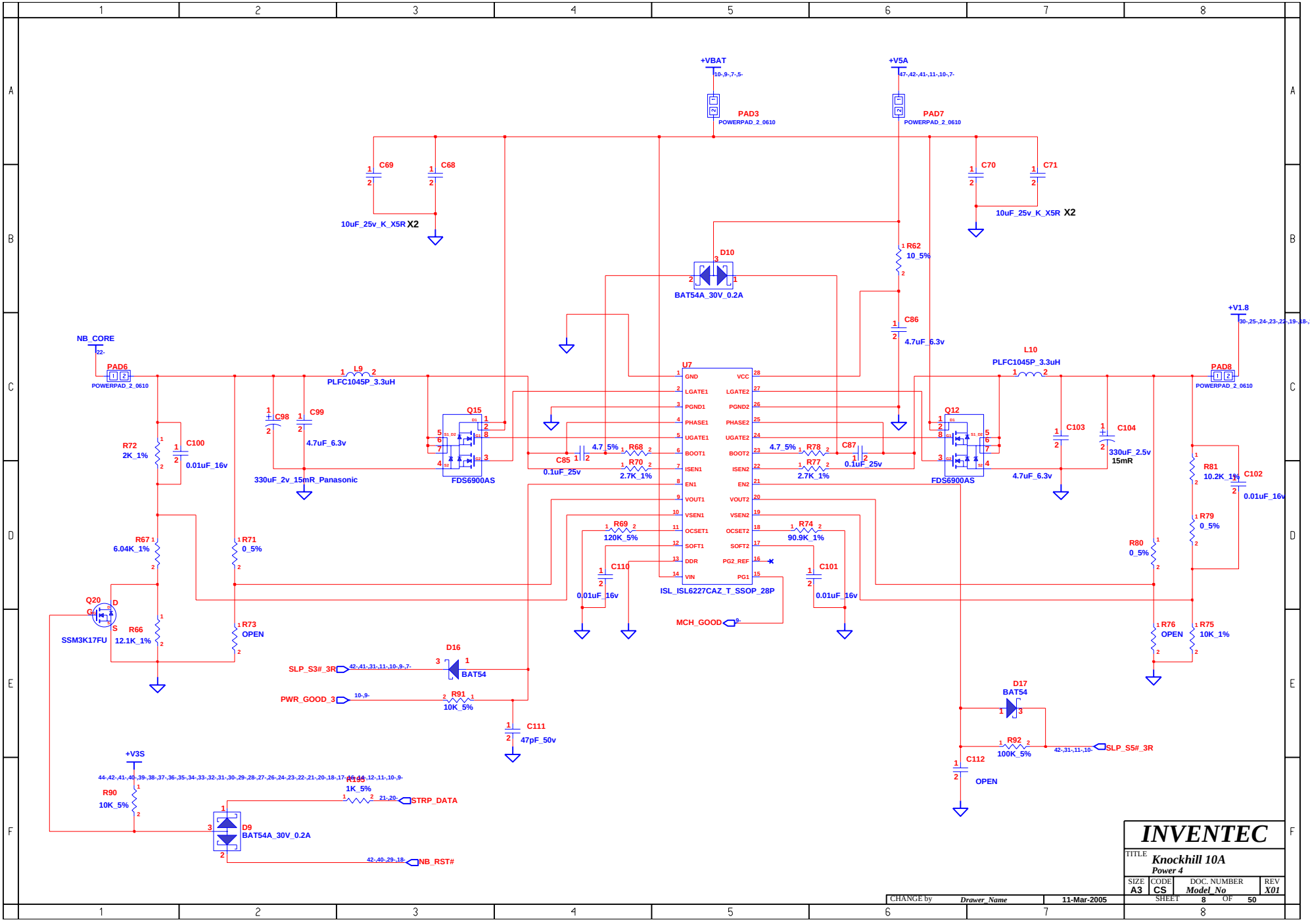
+VBAT
10-,9-,7-,5-
PAD3
POWERPAD_2_0610
+V5A
47-,42-,41-,11-,10-,7-
PAD7
POWERPAD_2_0610
C69
C68
10uF_25v_K_X5R X2
C70
C71
10uF_25v_K_X5R X2
D10
BAT54A_30V_0.2A
R62
10_5%
C86
4.7uF_6.3v
+V1.8
30-,25-,24-,23-,22-,19-,18-,11-,10-
NB_CORE
22-
PAD6
POWERPAD_2_0610
L9
PLFC1045P_3.3uH
C98
C99
4.7uF_6.3v
330uF_2v_15mR_Panasonic
Q15
FDS6900AS
R72
2K_1%
C100
0.01uF_16v
U7
GND
LGATE1
PGND1
PHASE1
UGATE1
BOOT1
ISEN1
EN1
VOUT1
VSEN1
OCSET1
SOFT1
DDR
VIN
VCC
LGATE2
PGND2
PHASE2
UGATE2
BOOT2
ISEN2
EN2
VOUT2
VSEN2
OCSET2
SOFT2
PG2_REF
PG1
ISL_ISL6227CAZ_T_SSOP_28P
C85
0.1uF_25v
4.7_5%
R68
R70
2.7K_1%
4.7_5%
R78
R77
2.7K_1%
C87
0.1uF_25v
L10
PLFC1045P_3.3uH
Q12
FDS6900AS
C103
4.7uF_6.3v
C104
330uF_2.5v
15mR
PAD8
POWERPAD_2_0610
R81
10.2K_1%
C102
0.01uF_16v
R79
0_5%
R80
0_5%
R67
6.04K_1%
R71
0_5%
R69
120K_5%
R74
90.9K_1%
C110
0.01uF_16v
C101
0.01uF_16v
Q20
SSM3K17FU
R66
12.1K_1%
R73
OPEN
MCH_GOOD
9-
R76
OPEN
R75
10K_1%
D16
BAT54
SLP_S3#_3R
42-,41-,31-,11-,10-,9-,7-
PWR_GOOD_3
10-,9-
R91
10K_5%
C111
47pF_50v
D17
BAT54
R92
100K_5%
42-,31-,11-,10-
SLP_S5#_3R
C112
OPEN
+V3S
44-,42-,41-,40-,39-,38-,37-,36-,35-,34-,33-,32-,31-,30-,29-,28-,27-,26-,24-,23-,22-,21-,20-,18-,17-,16-,14-,12-,11-,10-,9-
R90
10K_5%
R65
1K_5%
21-,20-
STRP_DATA
D9
BAT54A_30V_0.2A
42-,40-,29-,18-
NB_RST#
INVENTEC
TITLE
Knockhill 10A
Power 4
SIZE A3
CODE CS
DOC. NUMBER Model_No
REV X01
CHANGE by Drawer_Name
11-Mar-2005
SHEET 8 OF 50

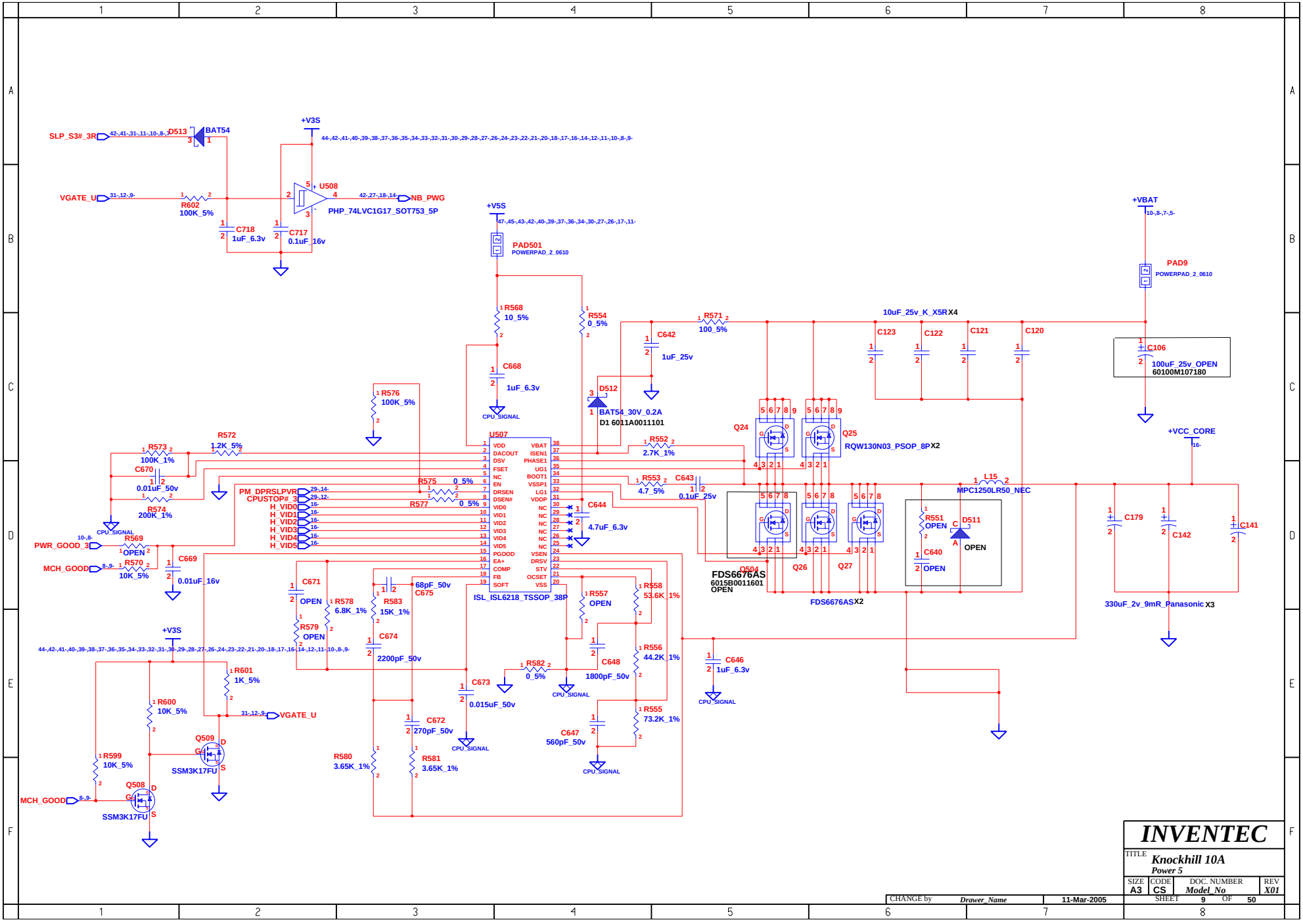

INVENTEC

TITLE *Knockhill 10A*
Power 5

SIZE	CODE	DOC. NUMBER	REV
A3	CS	*Model_No*	*X01*

SHEET 9 OF 50

CHANGE by *Drawer_Name* 11-Mar-2005

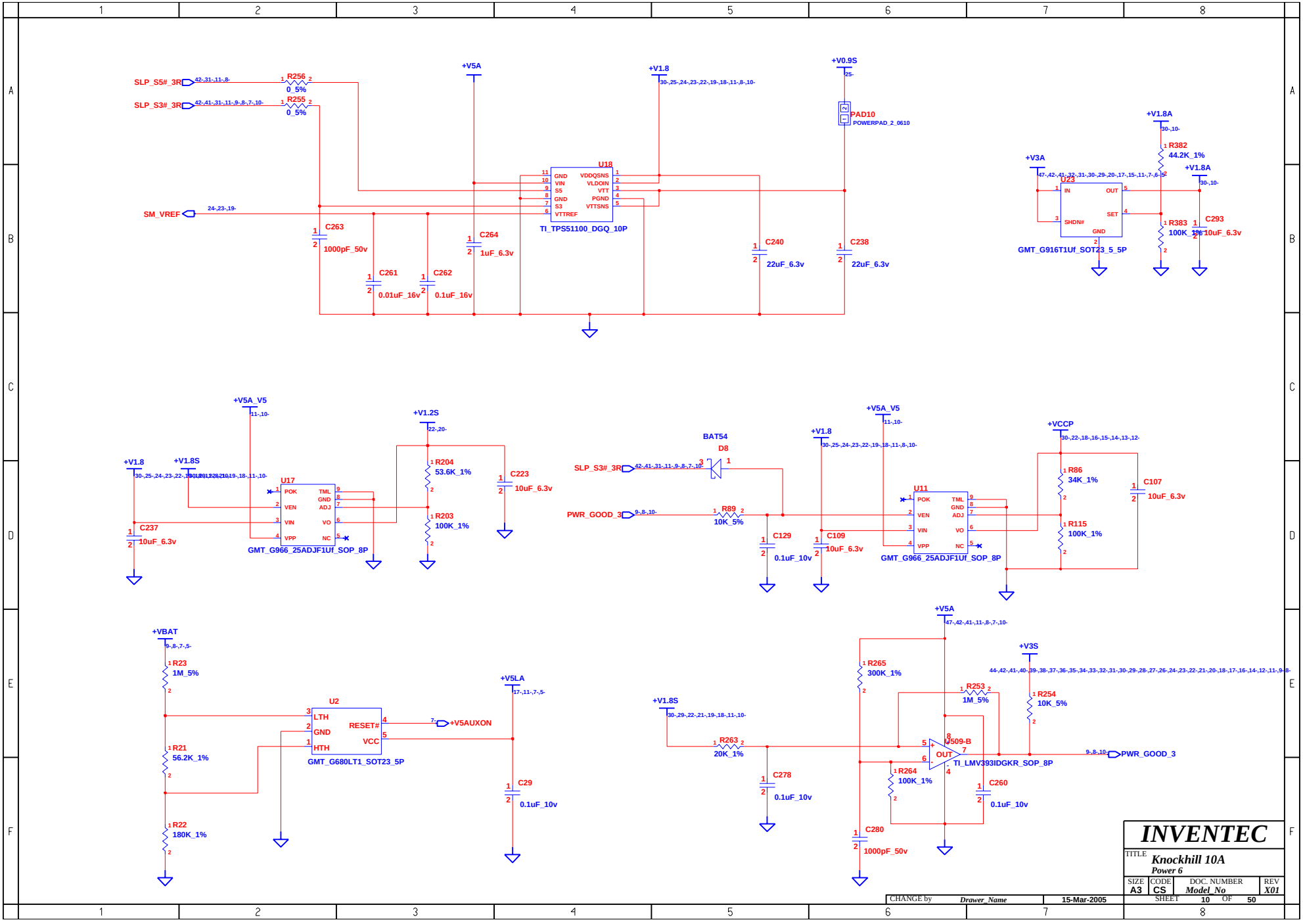
SLP_S5#_3R
SLP_S3#_3R
SM_VREF
R256 0_5%
R255 0_5%
+V5A
+V1.8
+V0.9S
PAD10
POWERPAD_2_0610
U18
GND VIN S5 GND S3 VTTREF
VDDQSNS VLDOIN VTT PGND VTTSNS
TI_TPS51100_DGQ_10P
C263 1000pF_50v
C261 0.01uF_16v
C262 0.1uF_16v
C264 1uF_6.3v
C240 22uF_6.3v
C238 22uF_6.3v
+V1.8A
R382 44.2K_1%
+V3A
U23
IN OUT SET SHDN# GND
GMT_G916T1Uf_SOT23_5_5P
R383 100K_1%
C293 10uF_6.3v
+V5A_V5
+V1.2S
+V1.8
+V1.8S
U17
POK VEN VIN VPP TML GND ADJ VO NC
GMT_G966_25ADJF1Uf_SOP_8P
C237 10uF_6.3v
R204 53.6K_1%
R203 100K_1%
C223 10uF_6.3v
BAT54
D8
PWR_GOOD_3
R89 10K_5%
C129 0.1uF_10v
C109 10uF_6.3v
U11
+VCCP
R86 34K_1%
R115 100K_1%
C107 10uF_6.3v
+VBAT
R23 1M_5%
R21 56.2K_1%
R22 180K_1%
U2
LTH GND HTH RESET# VCC
GMT_G680LT1_SOT23_5P
+V5AUXON
+V5LA
C29 0.1uF_10v
R265 300K_1%
R253 1M_5%
+V3S
R254 10K_5%
R263 20K_1%
C278 0.1uF_10v
U509-B
OUT
TI_LMV393IDGKR_SOP_8P
R264 100K_1%
C260 0.1uF_10v
C280 1000pF_50v
INVENTEC
TITLE
Knockhill 10A
Power 6
SIZE A3
CODE CS
DOC. NUMBER Model_No
REV X01
CHANGE by Drawer_Name
15-Mar-2005
SHEET 10 OF 50

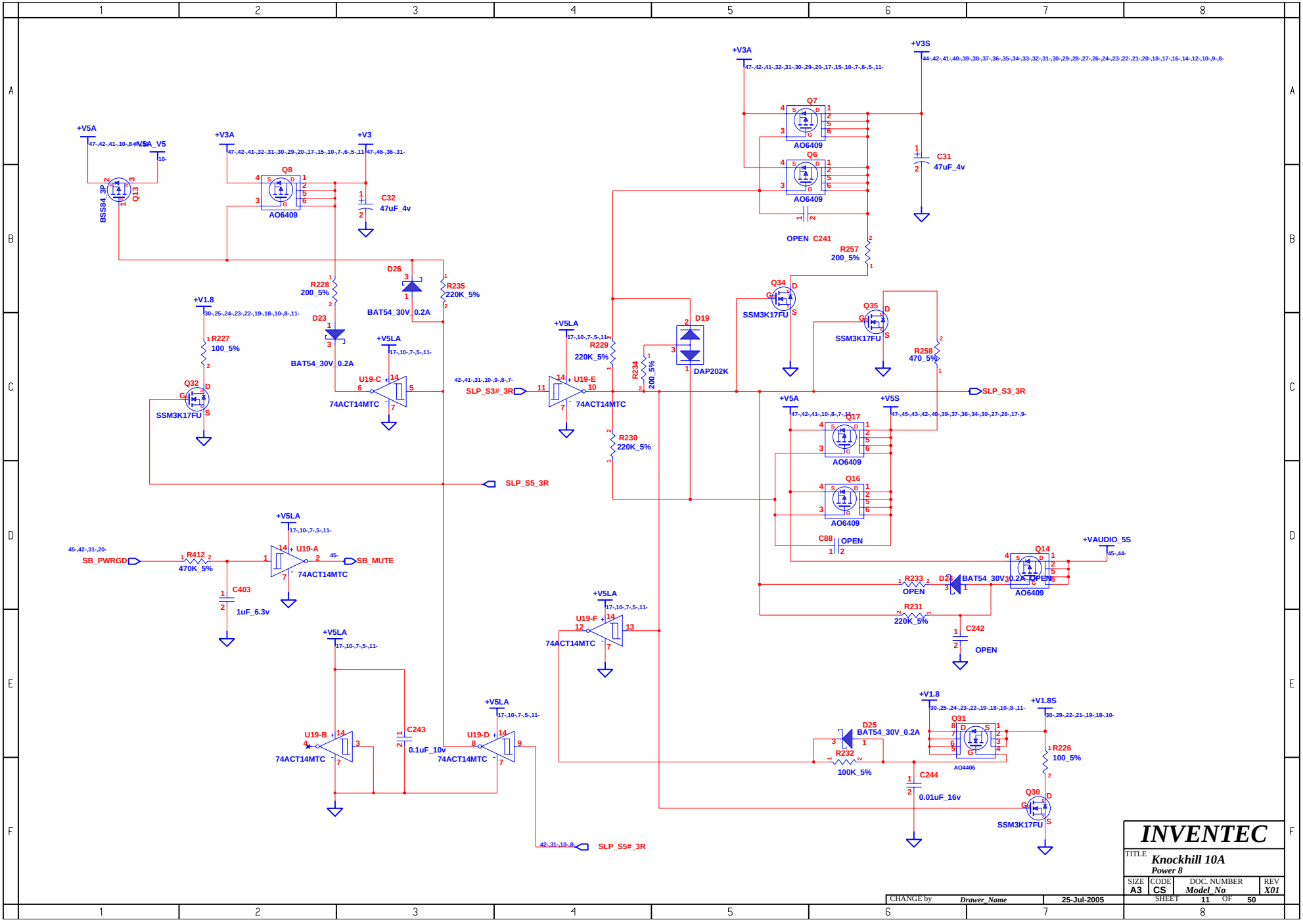
+V5A
+V5A_V5
BSS84_3P
Q13
+V3A
Q8
AO6409
+V3
C32
47uF_4v
R228
200_5%
D26
BAT54_30V_0.2A
R235
220K_5%
D23
BAT54_30V_0.2A
+V1.8
R227
100_5%
Q32
SSM3K17FU
+V5LA
U19-C
74ACT14MTC
SLP_S3#_3R
U19-E
R229
220K_5%
R234
200_5%
D19
DAP202K
R230
220K_5%
SLP_S5_3R
+V3A
Q7
AO6409
Q6
AO6409
+V3S
C31
47uF_4v
OPEN C241
R257
200_5%
Q34
SSM3K17FU
Q35
SSM3K17FU
R258
470_5%
SLP_S3_3R
+V5A
+V5S
Q17
AO6409
Q16
AO6409
C88
OPEN
+VAUDIO_5S
Q14
AO6409
R233
OPEN
D24
BAT54_30V_0.2A_TOPEN
R231
220K_5%
C242
OPEN
SB_PWRGD
R412
470K_5%
C403
1uF_6.3v
U19-A
74ACT14MTC
SB_MUTE
U19-F
74ACT14MTC
U19-B
74ACT14MTC
C243
0.1uF_10v
U19-D
74ACT14MTC
SLP_S5#_3R
+V1.8
Q31
AO4406
+V1.8S
D25
BAT54_30V_0.2A
R232
100K_5%
C244
0.01uF_16v
R226
100_5%
Q30
SSM3K17FU
INVENTEC
TITLE
Knockhill 10A
Power 8
SIZE A3
CODE CS
DOC. NUMBER Model_No
REV X01
CHANGE by Drawer_Name
25-Jul-2005
SHEET 11 OF 50

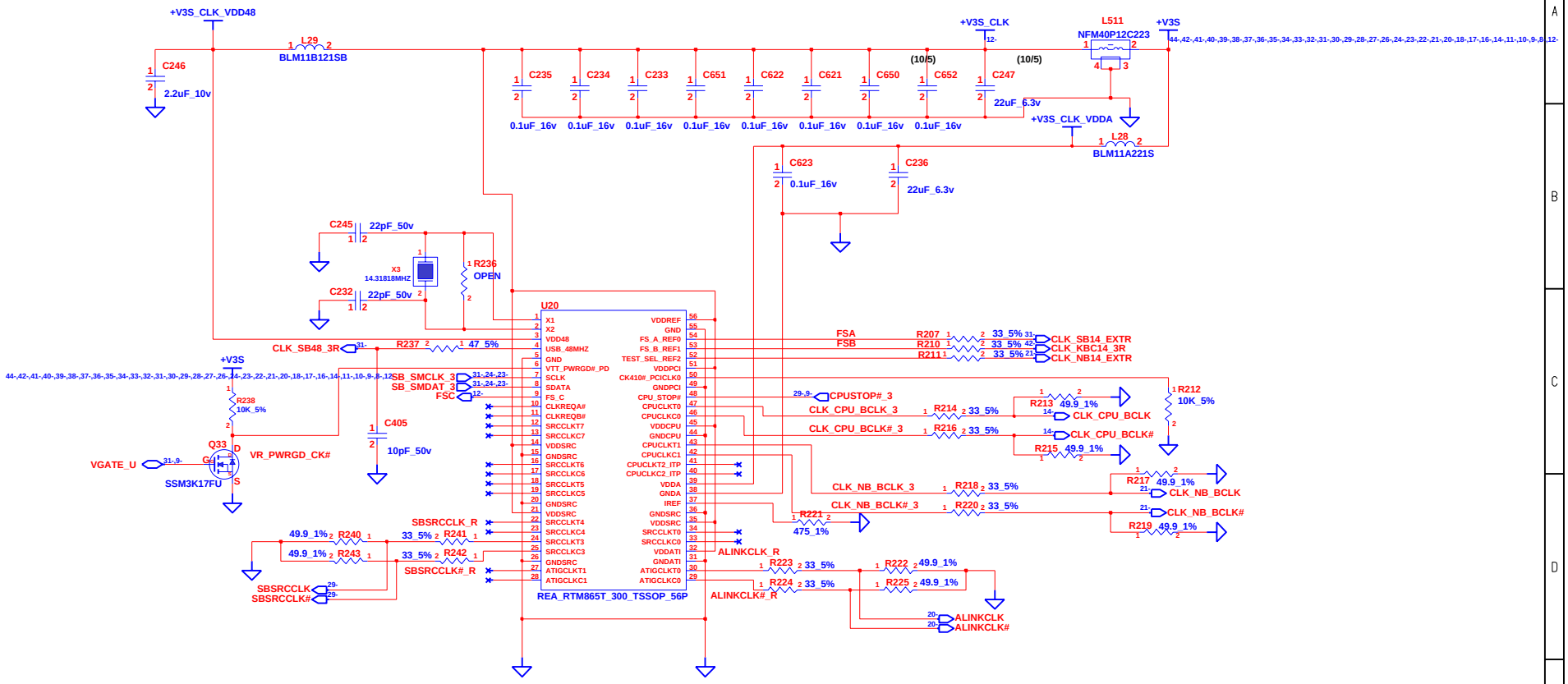

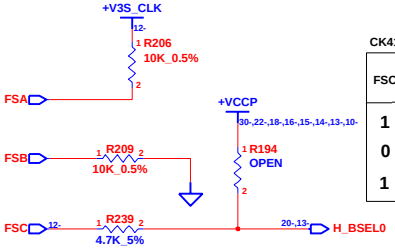

CK410 FREQUENCY SELECT TABLE(MHZ)

FSC	FSB	FSA	CPU	SRC	PCI	REF
1	0	1	100	100	33	14.31
0	0	1	133	100	33	14.31
1	1	1	---	---	---	---

INVENTEC

TITLE *Knockhill 10A*
Clock

SIZE	CODE	DOC. NUMBER	REV
A3	CS	*Model_No*	*X01*

CHANGE by *Drawer_Name* 20-Dec-2004 SHEET 12 OF 50

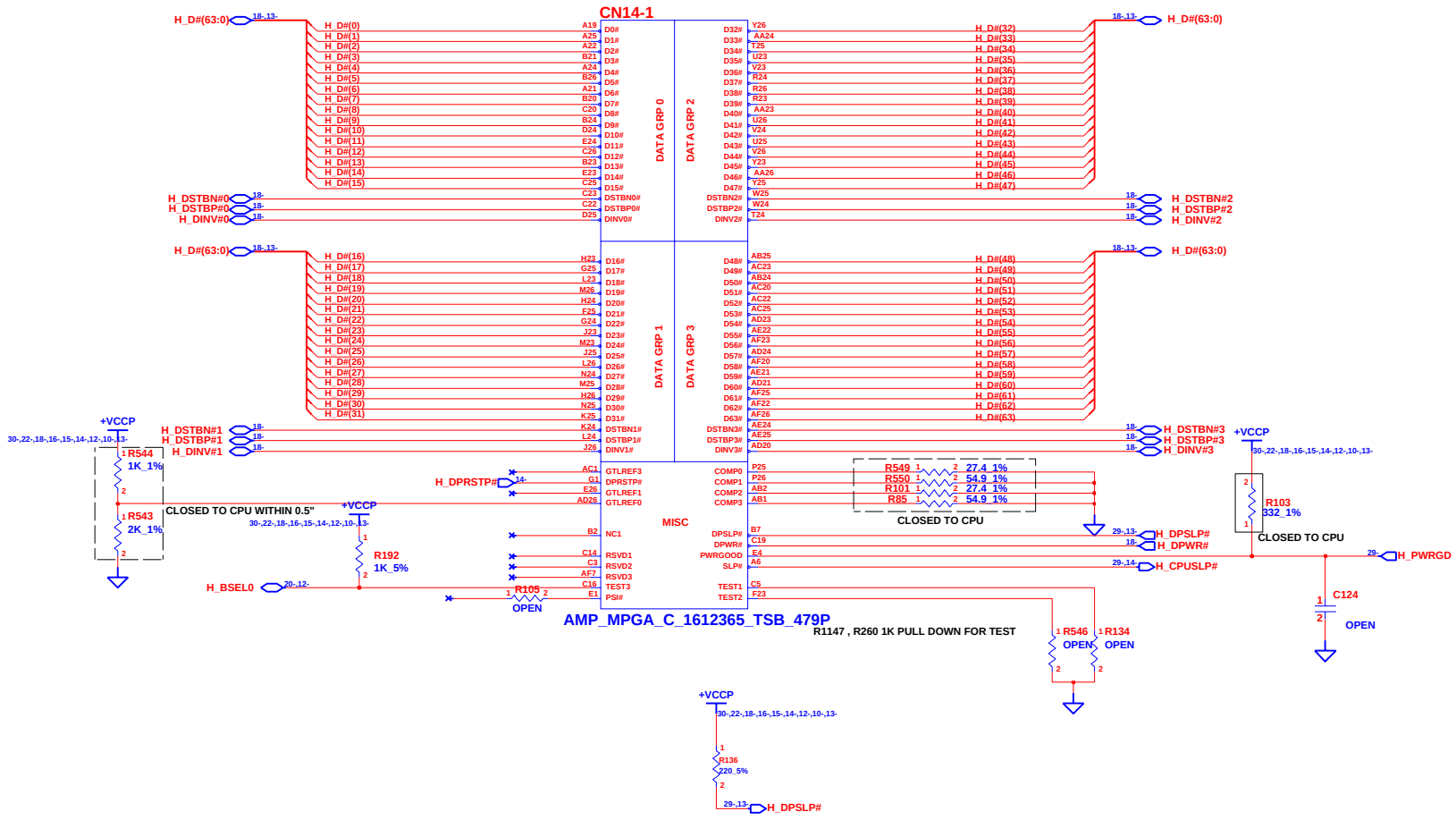

INVENTEC

TITLE Knockhill 10A
DOTHAN-1

SIZE	CODE	DOC. NUMBER	REV
A3	CS	Model_No	X01

CHANGE by Drawer_Name 20-Dec-2004 SHEET 13 OF 50

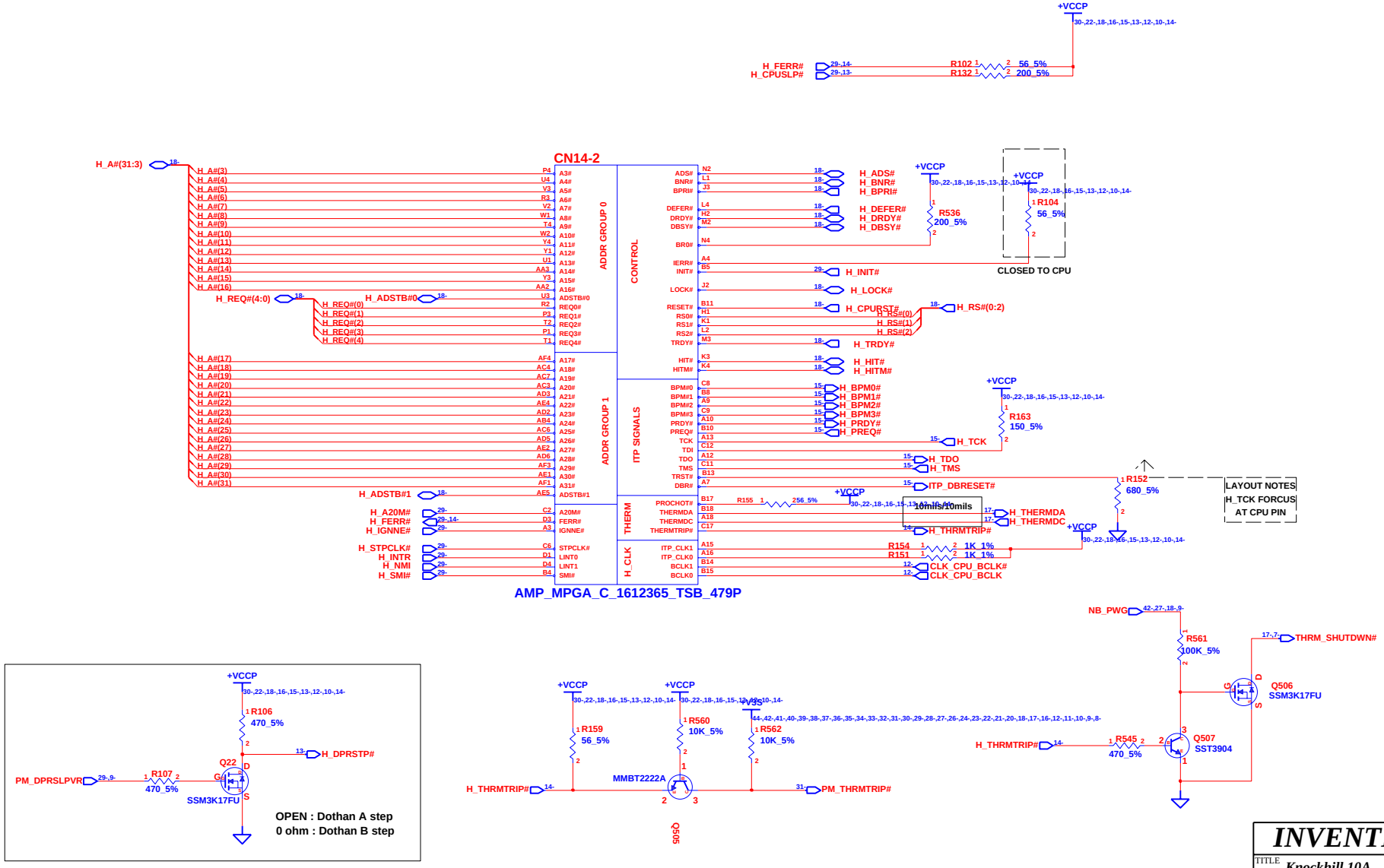

INVENTEC

TITLE Knockhill 10A
DOTHAN-2

SIZE	CODE	DOC. NUMBER	REV
A3	CS	Model_No	X01

CHANGE by Drawer_Name 10-Dec-2004 SHEET 14 OF 50

In-Target Probe

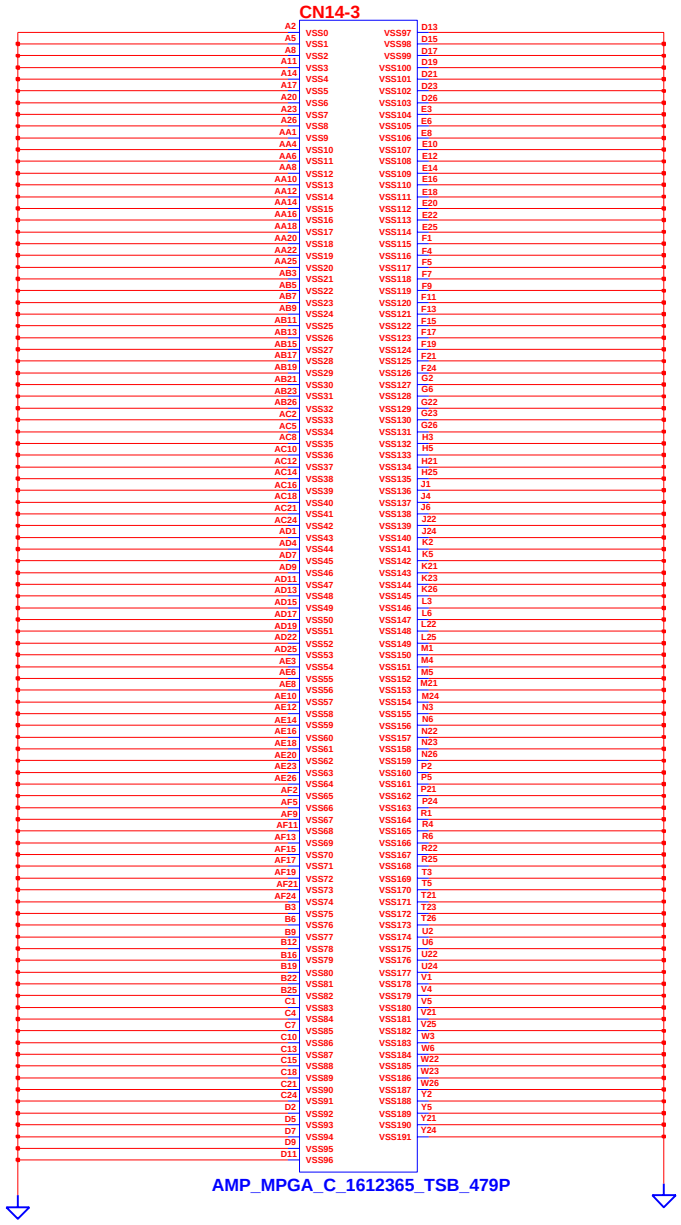

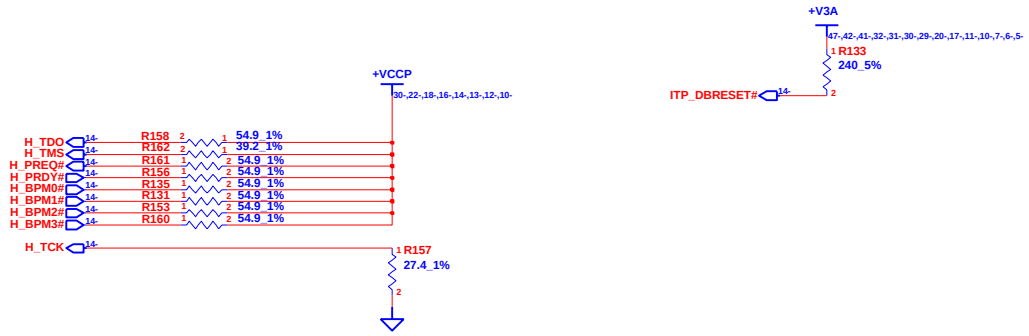

CHANGE by	Drawer_Name	10-Dec-2004	

INVENTEC

TITLE *Knockhill 10A*
DOTHAN-3

SIZE	CODE	DOC. NUMBER	REV
A3	CS	Model_No	X01

SHEET 15 OF 50

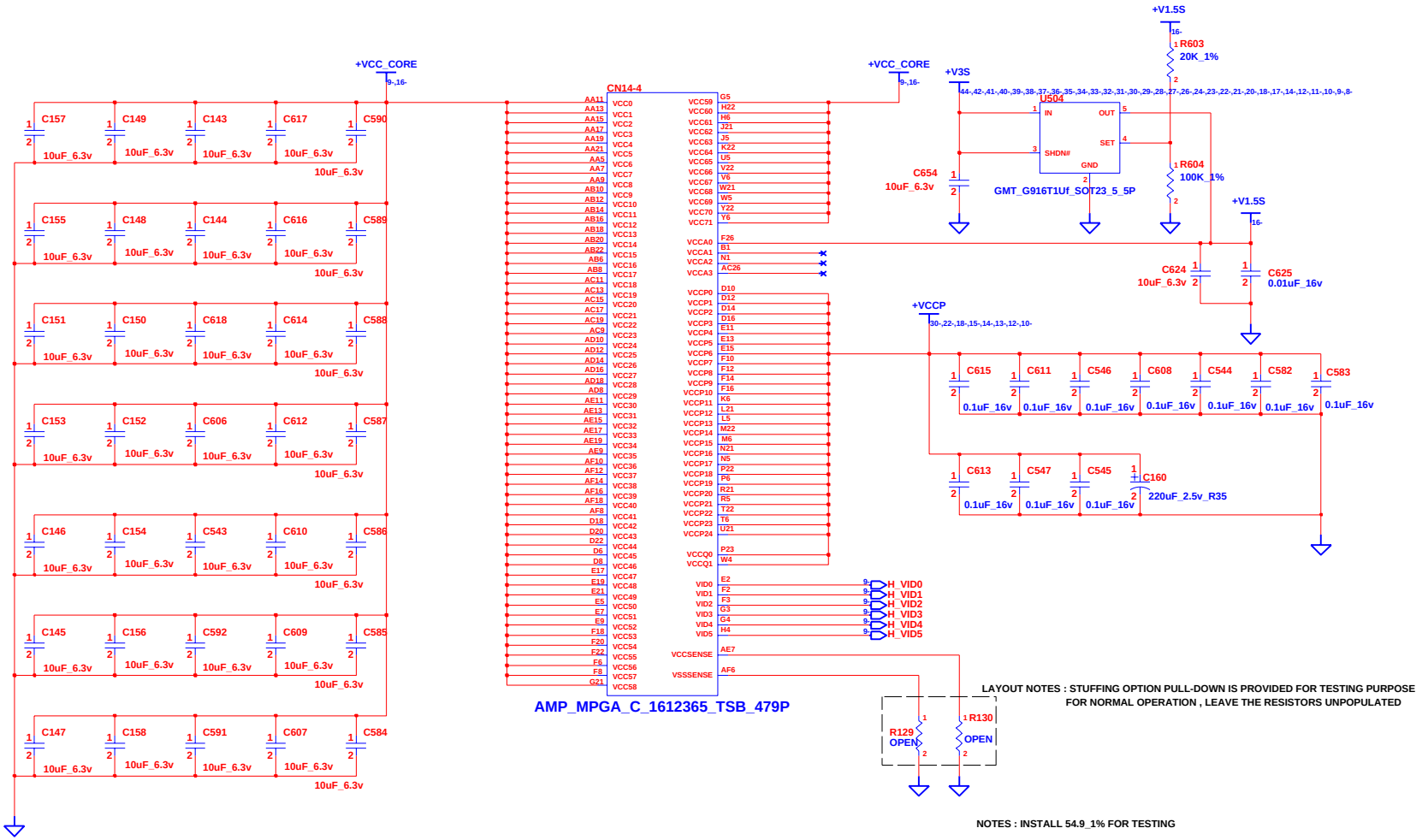

LAYOUT NOTES : STUFFING OPTION PULL-DOWN IS PROVIDED FOR TESTING PURPOSE FOR NORMAL OPERATION , LEAVE THE RESISTORS UNPOPULATED

NOTES : INSTALL 54.9_1% FOR TESTING

INVENTEC			
TITLE Knockhill 10A DOTHAN-4			
SIZE A3	CODE CS	DOC. NUMBER Model_No	REV X01
CHANGE by Drawer_Name	16-Dec-2004	SHEET 16 OF 50	

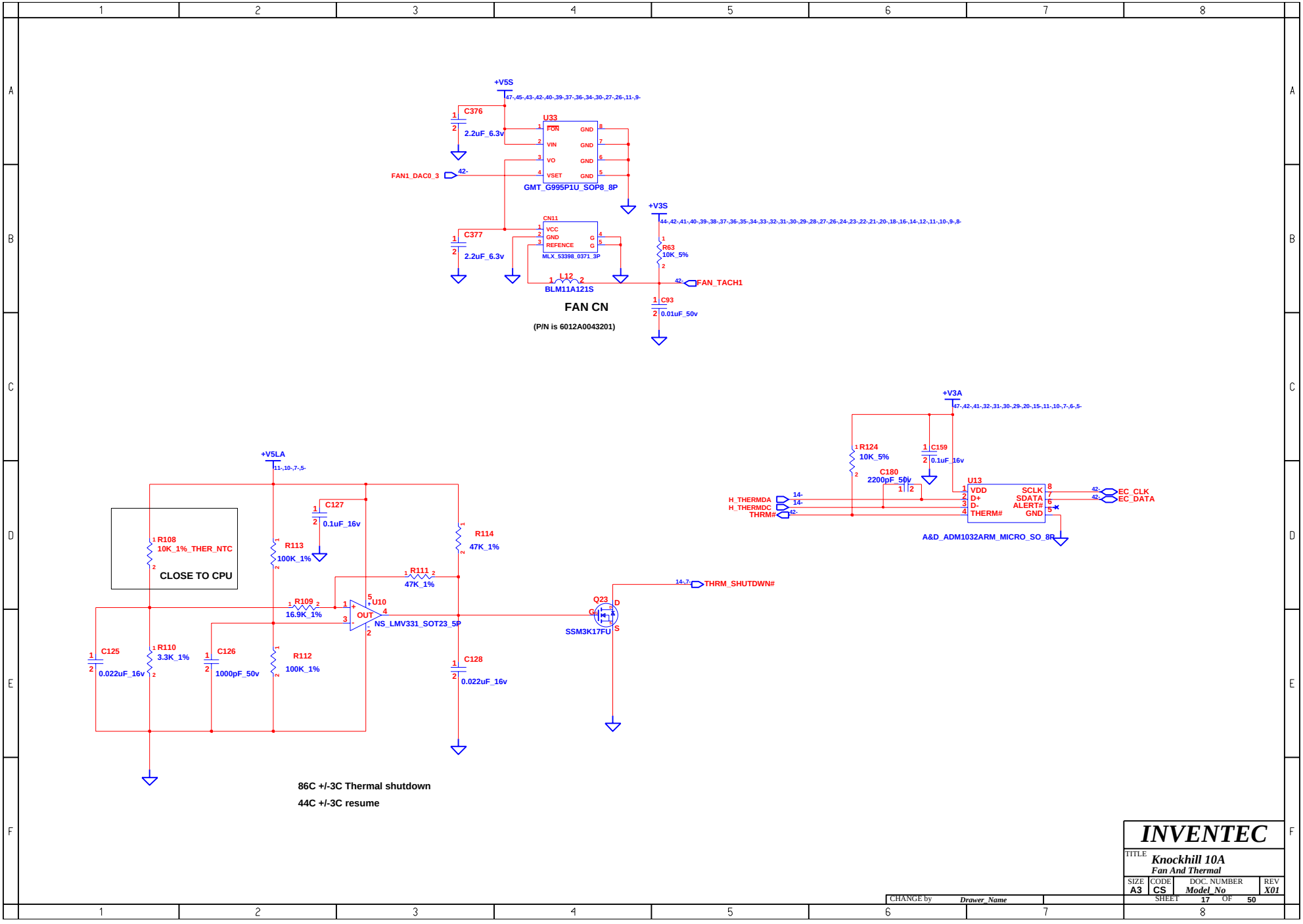
+V5S
47-,45-,43-,42-,40-,39-,37-,36-,34-,30-,27-,26-,11-,9-
C376
2.2uF_6.3v
U33
FON
VIN
VO
VSET
GND
GND
GND
GND
FAN1_DAC0_3
42-
GMT_G995P1U_SOP8_8P
+V3S
44-,42-,41-,40-,39-,38-,37-,36-,35-,34-,33-,32-,31-,30-,29-,28-,27-,26-,24-,23-,22-,21-,20-,18-,16-,14-,12-,11-,10-,9-,8-
CN11
VCC
GND
REFENCE
MLX_53398_0371_3P
C377
2.2uF_6.3v
R63
10K_5%
L12
BLM11A121S
42-
FAN_TACH1
C93
0.01uF_50v
FAN CN
(P/N is 6012A0043201)
+V3A
47-,42-,41-,32-,31-,30-,29-,20-,15-,11-,10-,7-,6-,5-
R124
10K_5%
C159
0.1uF_16v
C180
2200pF_50v
U13
VDD
D+
D-
THERM#
SCLK
SDATA
ALERT#
GND
H_THERMDA
H_THERMDC
THRM#
14-
14-
42-
42-
42-
EC_CLK
EC_DATA
A&D_ADM1032ARM_MICRO_SO_8P
+V5LA
11-,10-,7-,5-
CLOSE TO CPU
R108
10K_1%_THER_NTC
C127
0.1uF_16v
R113
100K_1%
R114
47K_1%
R111
47K_1%
R109
16.9K_1%
U10
OUT
NS_LMV331_SOT23_5P
14-,7-
THRM_SHUTDWN#
Q23
G
D
S
SSM3K17FU
C125
0.022uF_16v
R110
3.3K_1%
C126
1000pF_50v
R112
100K_1%
C128
0.022uF_16v
86C +/-3C Thermal shutdown
44C +/-3C resume
INVENTEC
TITLE
Knockhill 10A
Fan And Thermal
SIZE
A3
CODE
CS
DOC. NUMBER
Model_No
REV
X01
SHEET
17
OF
50
CHANGE by
Drawer_Name

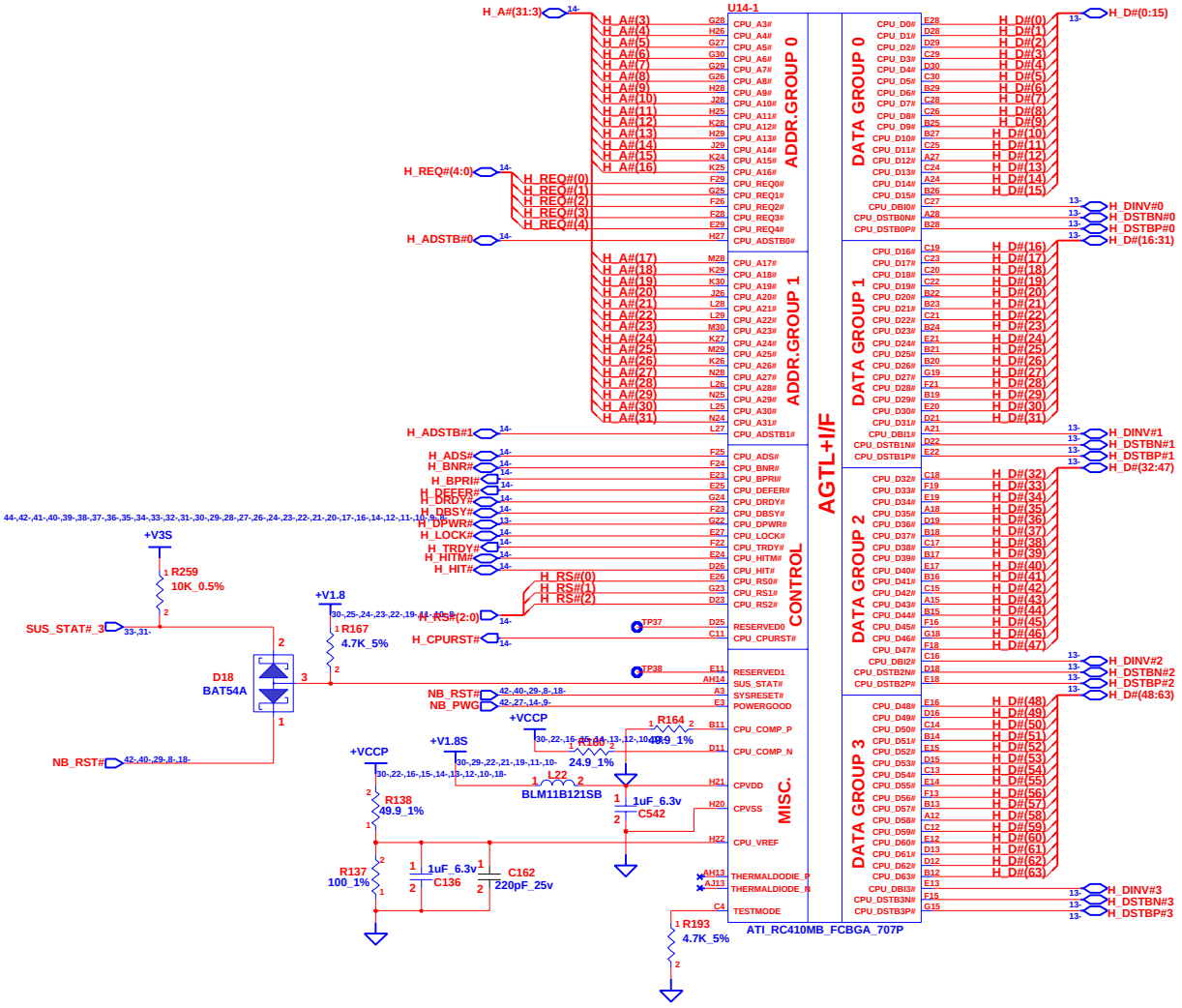

RC410MB 1 OF 5

INVENTEC			
TITLE	Knockhill 10A NB-1		
SIZE A3	CODE CS	DOC. NUMBER Model_No	REV X01
CHANGE by Drawer_Name	21-Dec-2004	SHEET 18 OF 50	

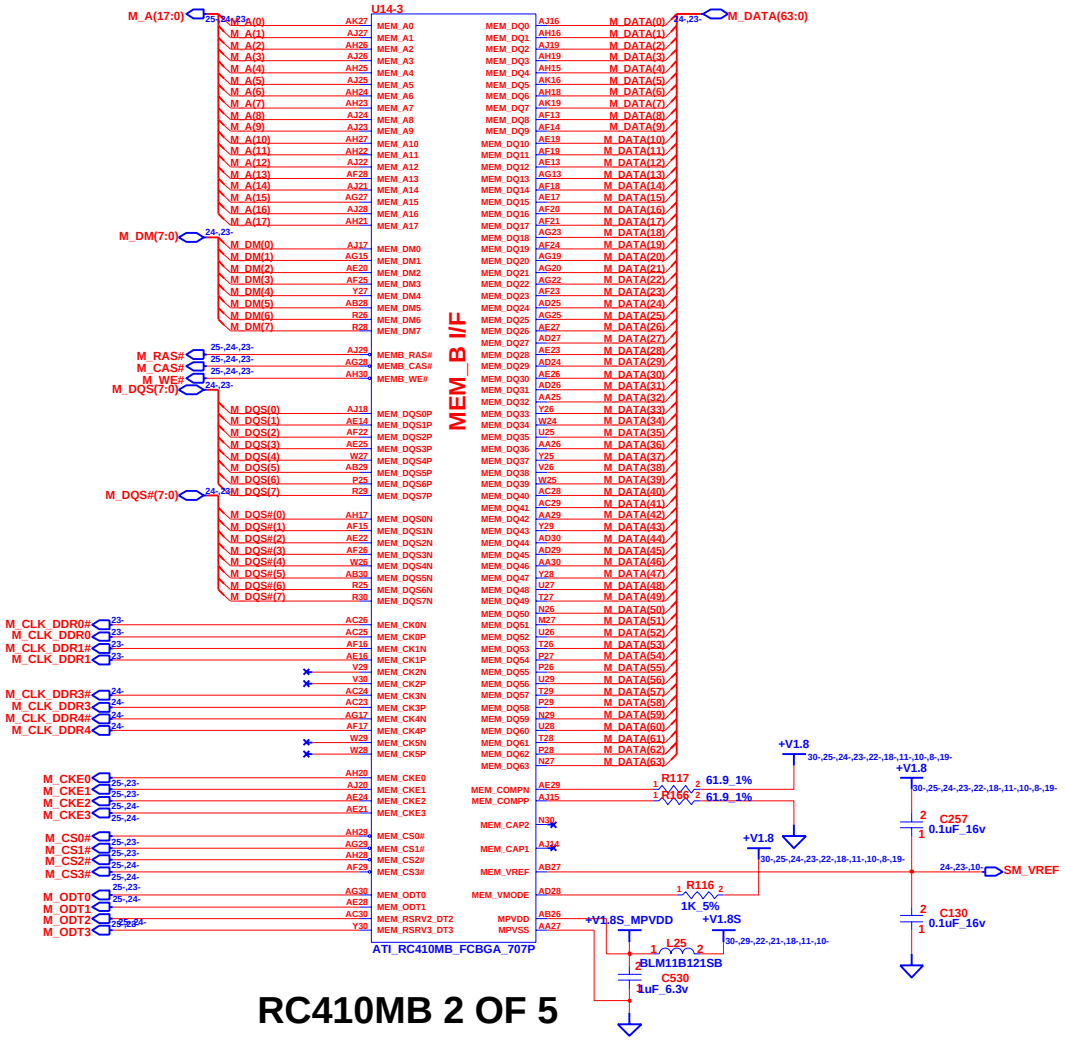

RC410MB 2 OF 5

MEMORY MODE SELECT

MEM_VMODE	DDR MODE
L	2.5V DDR
H	1.8V DDRII

INVENTEC

TITLE *Knockhill 10A*
NB-2

SIZE	CODE	DOC. NUMBER	REV
A3	CS	*Model_No*	*X01*

CHANGE by *Drawer_Name* 25-Apr-2005

SHEET 19 OF 50

			FSB
BMREQ#	DACHSYNC	DACVSYNC	
0	0	1	133M 7X0
0	0	0	100M 7X5

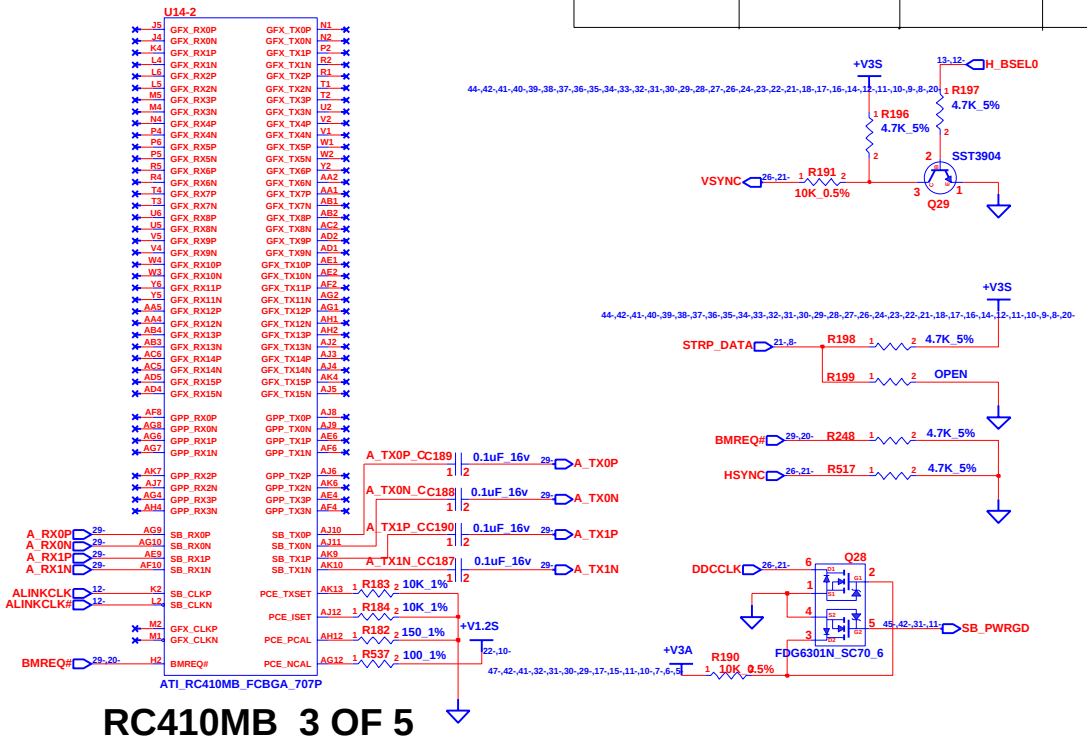

RC410MB 3 OF 5

0: MOBILE CPU
1: DESKTOP CPU

INVENTEC

TITLE Knockhill 10A
NB-3

SIZE	CODE	DOC. NUMBER	REV
A3	CS	Model_No	X01

CHANGE by Drawer_Name 31-Dec-2004 SHEET 20 OF 50

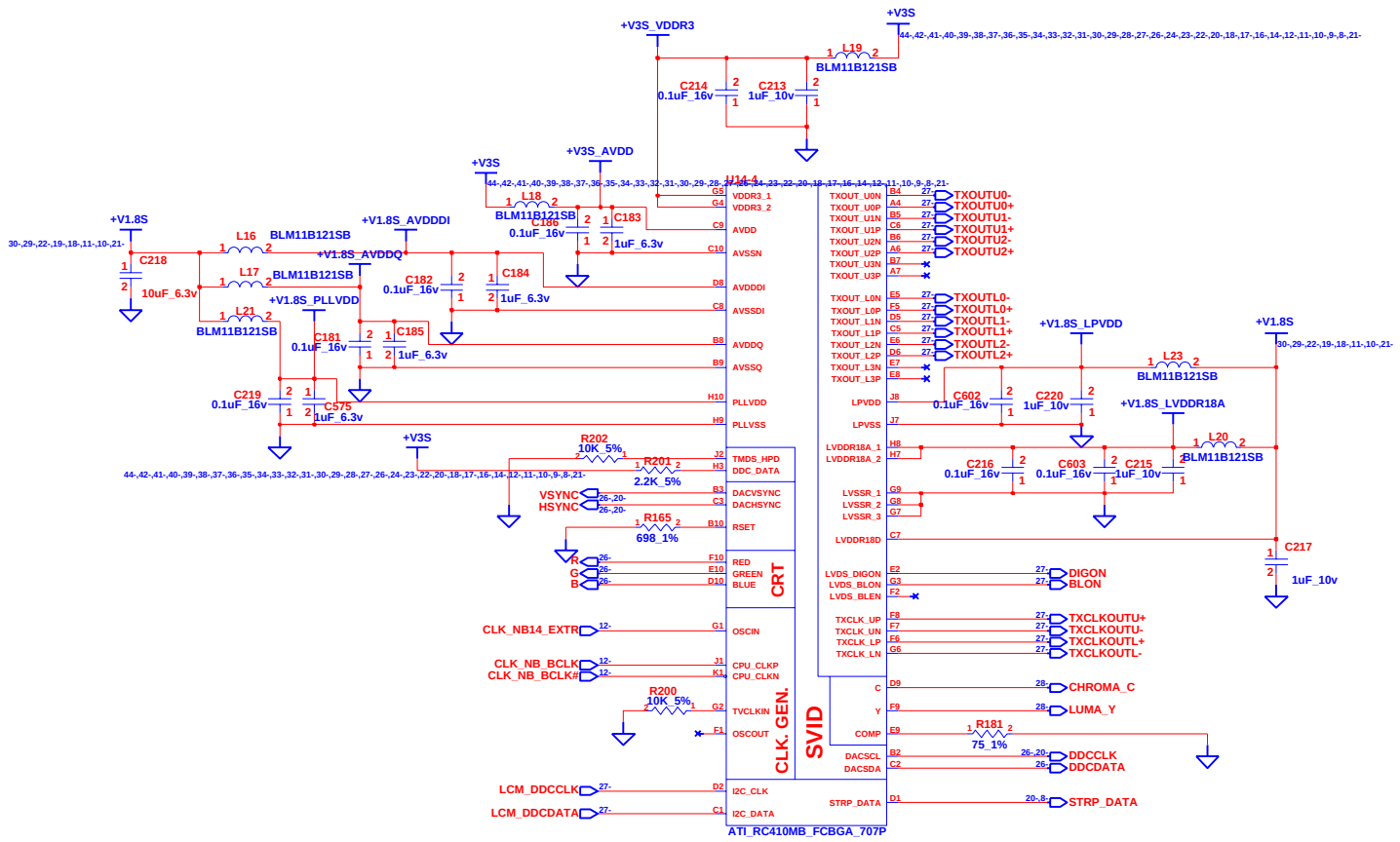

RC410MB 4 OF 5

INVENTEC			
TITLE Knockhill 10A NB-4			
SIZE A3	CODE CS	DOC. NUMBER Model_No	REV X01
CHANGE by Drawer_Name	19-Nov-2004	SHEET 21 OF 50	

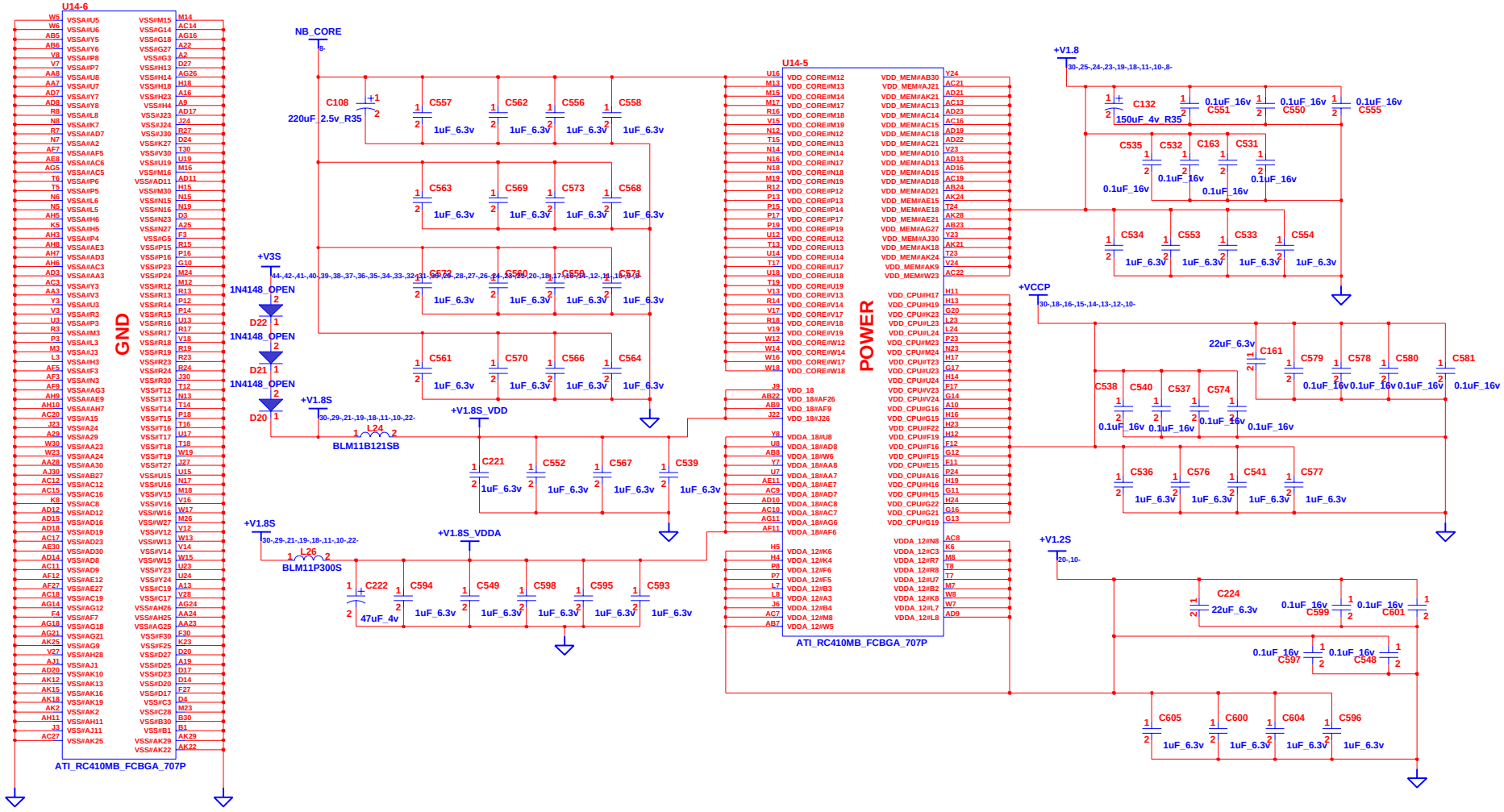

RC410MB 5 OF 5

INVENTEC			
TITLE Knockhill 10A NB-5			
SIZE A3	CODE CS	DOC. NUMBER Model_No	REV X01
CHANGE by Drawer_Name	19-Nov-2004	SHEET 22 OF 50	

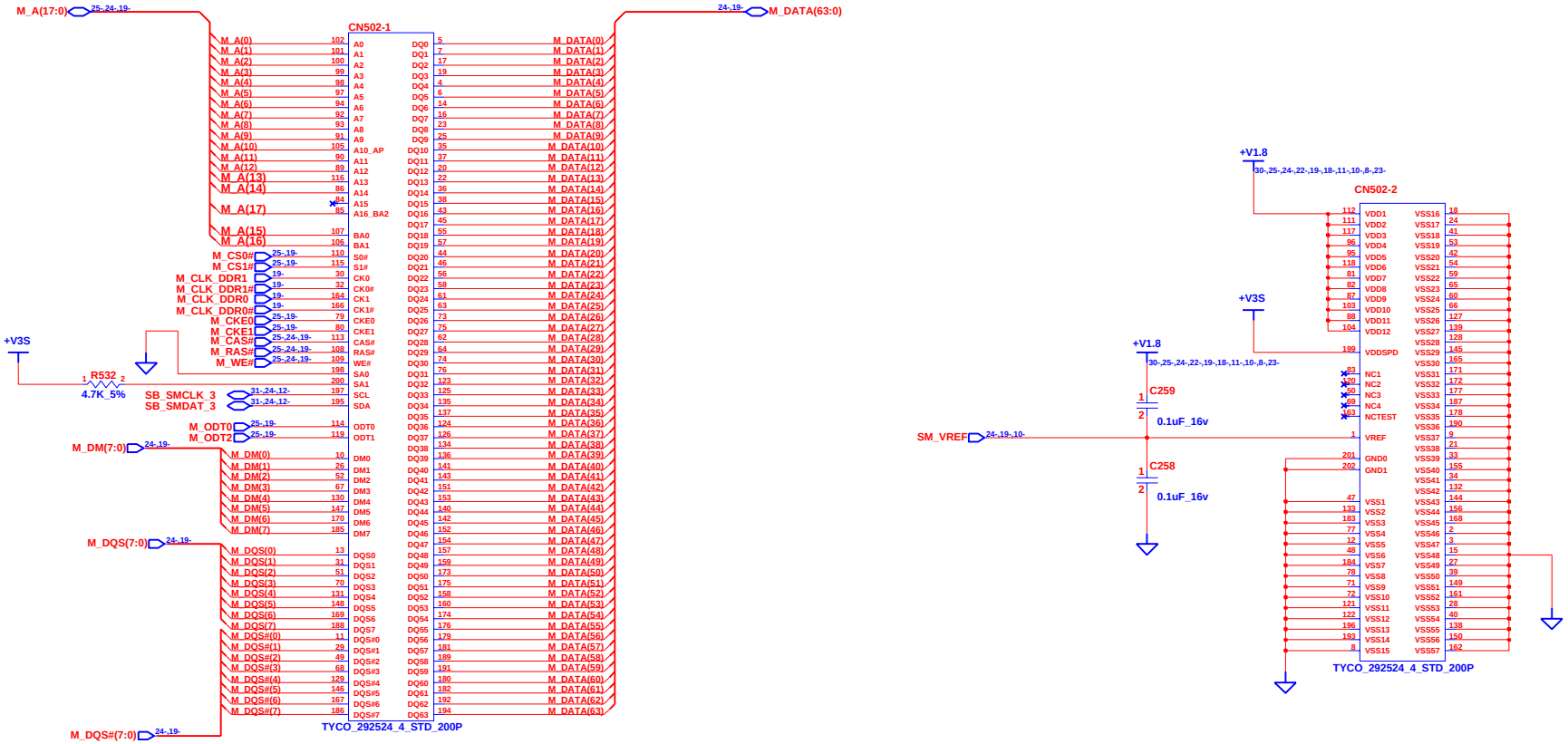

SO DIMM0

INVENTEC			
TITLE	Knockhill 10A DDR-1-SO-DIMM0		
SIZE A3	CODE CS	DOC. NUMBER Model_No	REV X01
CHANGE by Drawer_Name	25-Apr-2005	SHEET 23 OF 50	

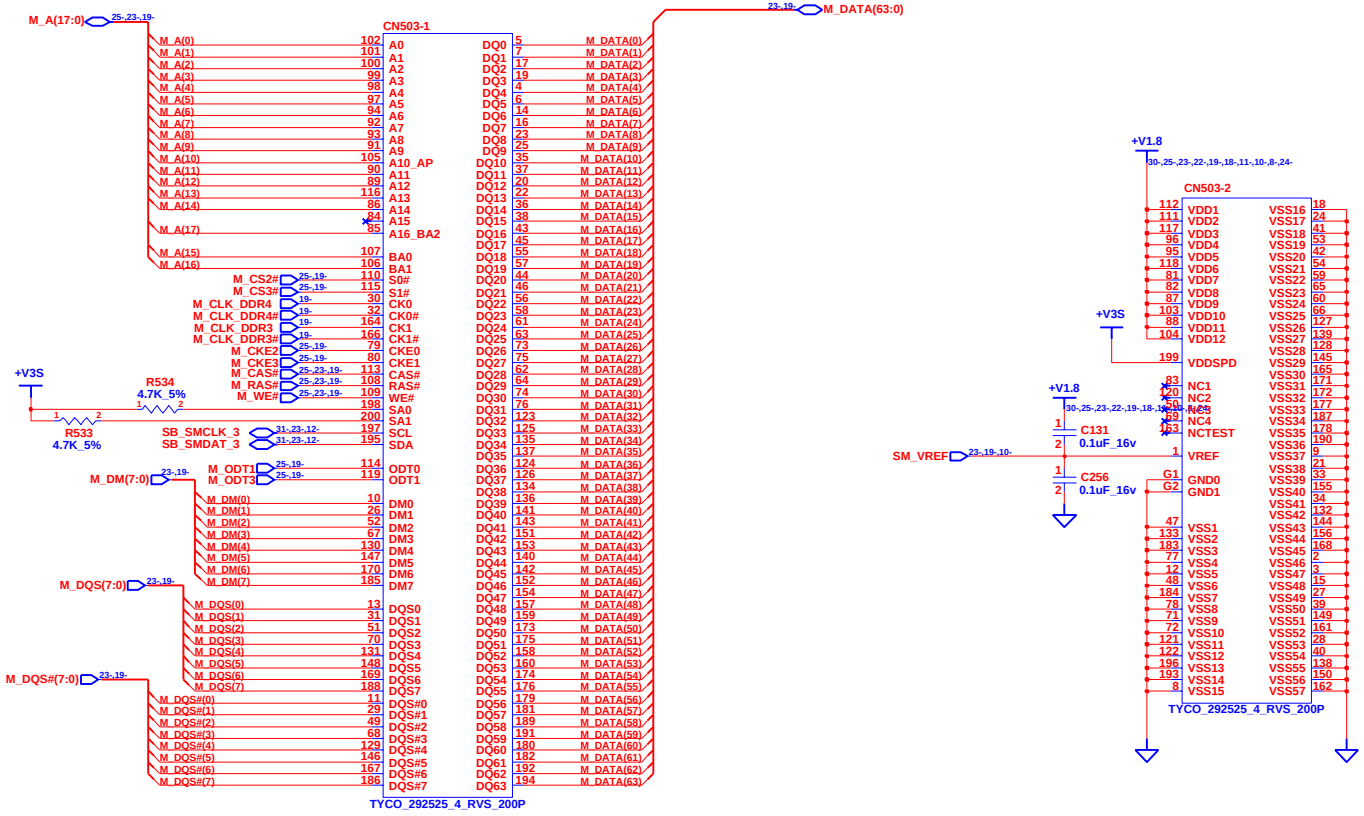

SO DIMM1

INVENTEC			
TITLE	Knockhill 10A DDR-2-SO-DIMM1		
SIZE A3	CODE CS	DOC. NUMBER Model_No	REV X01
CHANGE by Drawer_Name	31-Dec-2004	SHEET 24 OF 50	

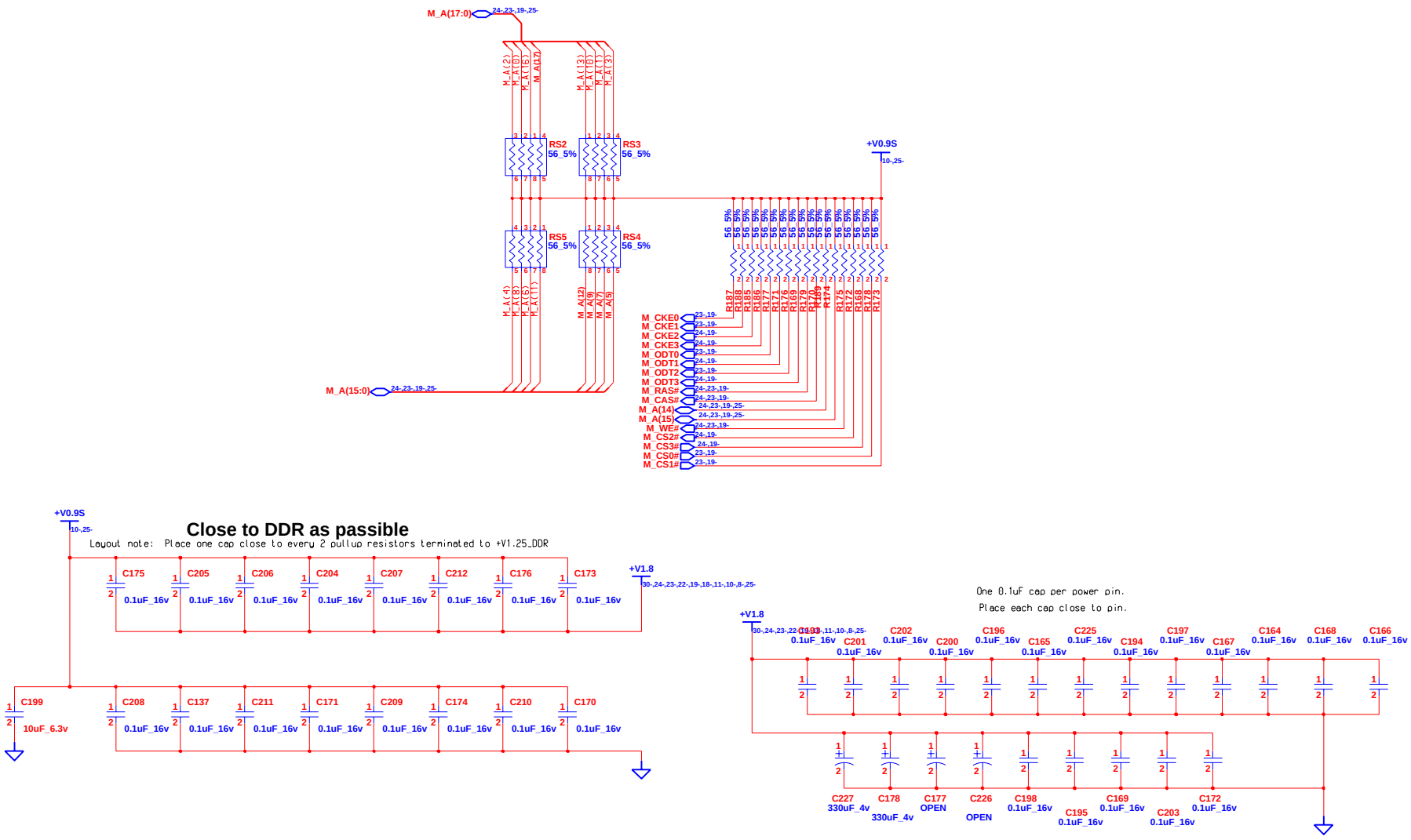

INVENTEC

TITLE **Knockhill 10A**
DDR-3

SIZE	CODE	DOC. NUMBER	REV
A3	CS	Model_No	X01

CHANGE by Drawer_Name 24-Jan-2005

SHEET 25 OF 50

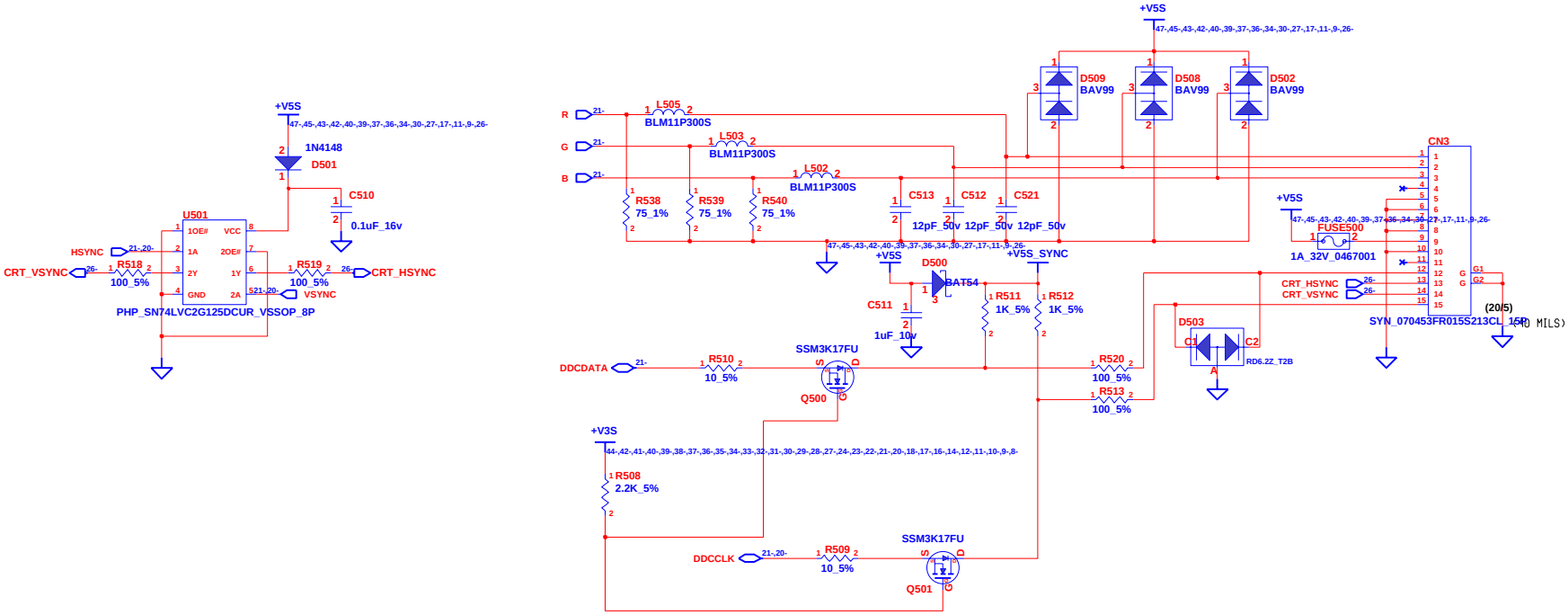

INVENTEC			
TITLE Knockhill 10A CRT			
SIZE A3	CODE CS	DOC. NUMBER Model_No	REV X01
CHANGE by Drawer_Name	19-Nov-2004	SHEET 26 OF 50	

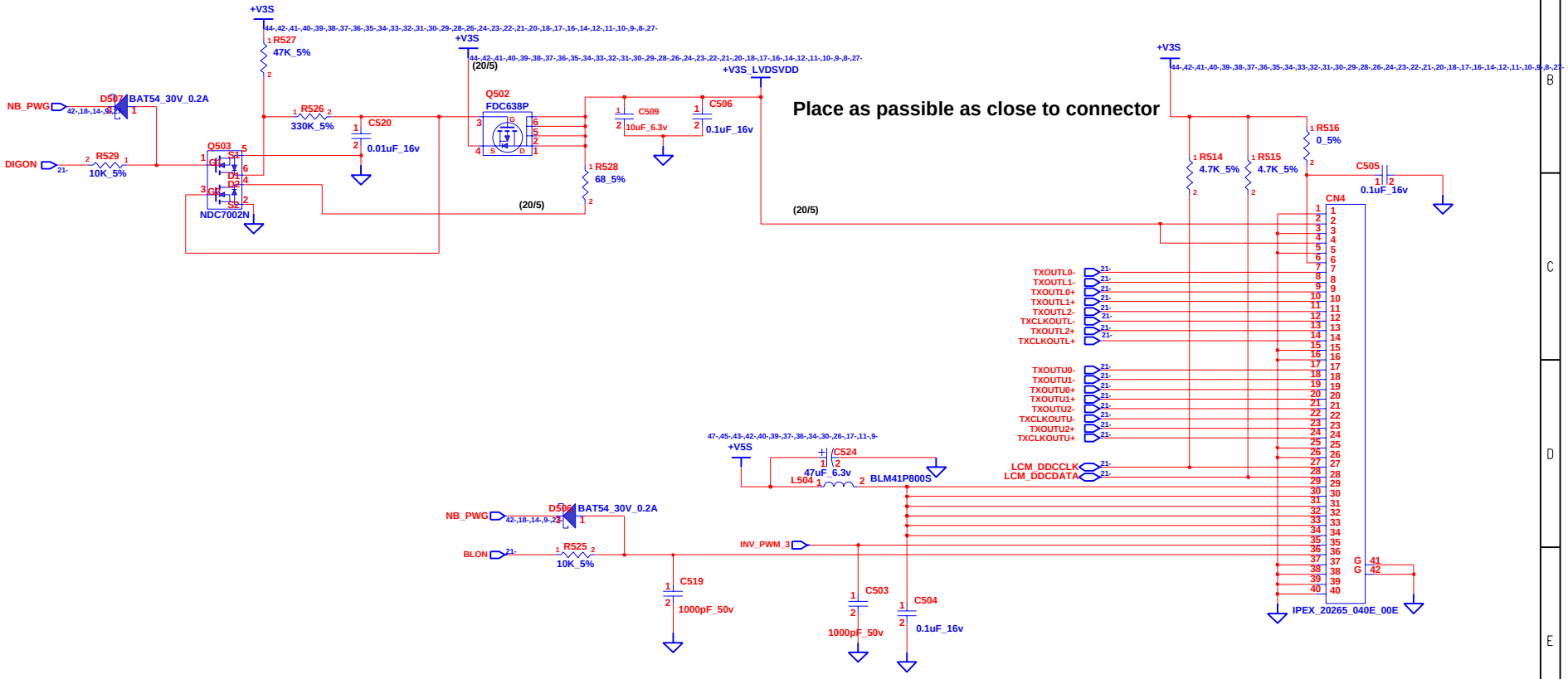

INVENTEC

TITLE Knockhill 10A
LVDS

SIZE	CODE	DOC. NUMBER	REV
A3	CS	Model_No	X01

CHANGE by Drawer_Name 14-Dec-2004

SHEET 27 OF 50

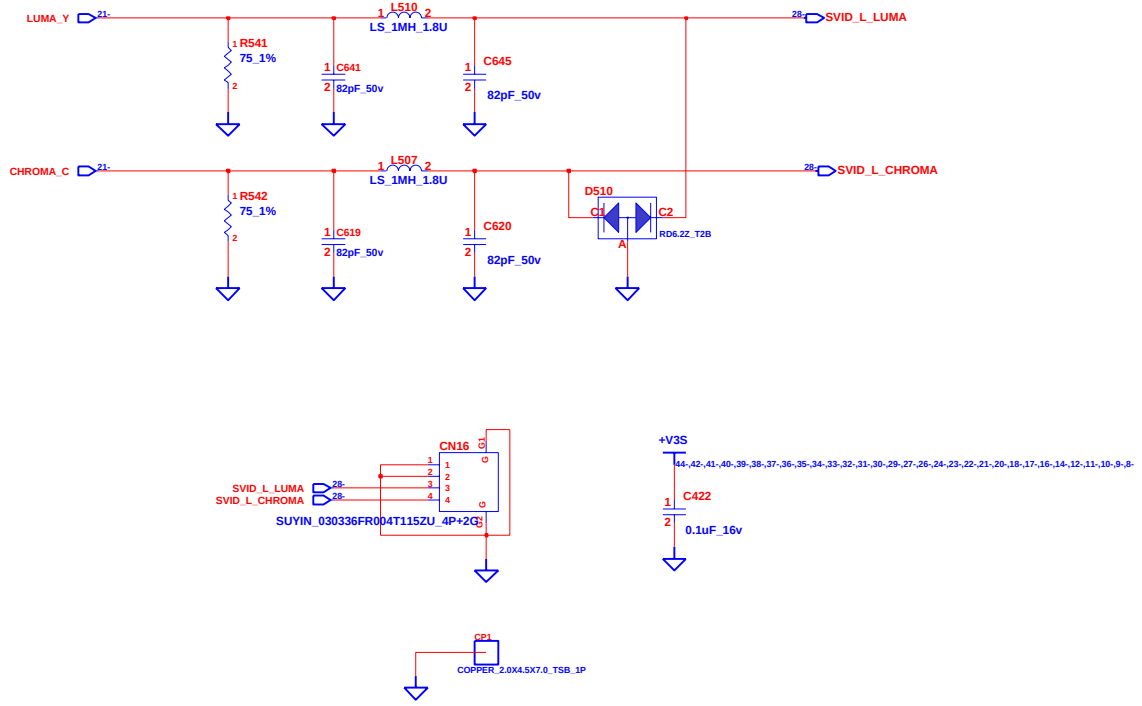

CHANGE by	Drawer_Name	1-Jul-2005	

INVENTEC

TITLE **Knockhill 10A**
Power 7

SIZE	CODE	DOC. NUMBER	REV
A3	CS	Model_No	X01

SHEET 28 OF 50

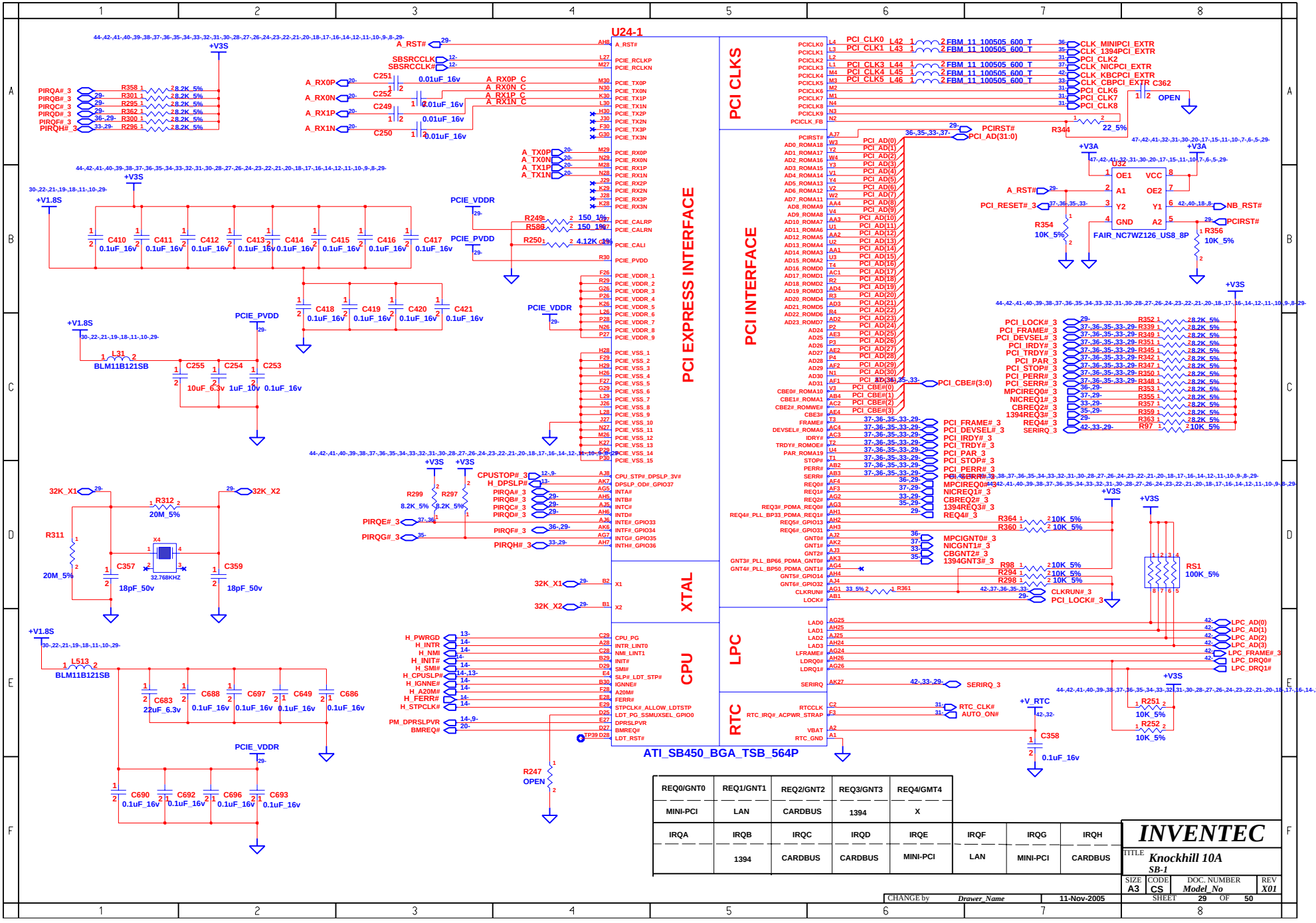

REQ0/GNT0	REQ1/GNT1	REQ2/GNT2	REQ3/GNT3	REQ4/GMT4
MINI-PCI	LAN	CARDBUS	1394	X

IRQA	IRQB	IRQC	IRQD	IRQE	IRQF	IRQG	IRQH
	1394	CARDBUS	CARDBUS	MINI-PCI	LAN	MINI-PCI	CARDBUS

INVENTEC

TITLE *Knockhill 10A*
SB-1

SIZE	CODE	DOC. NUMBER	REV
A3	CS	*Model_No*	*X01*

CHANGE by *Drawer_Name* 11-Nov-2005

SHEET 29 OF 50

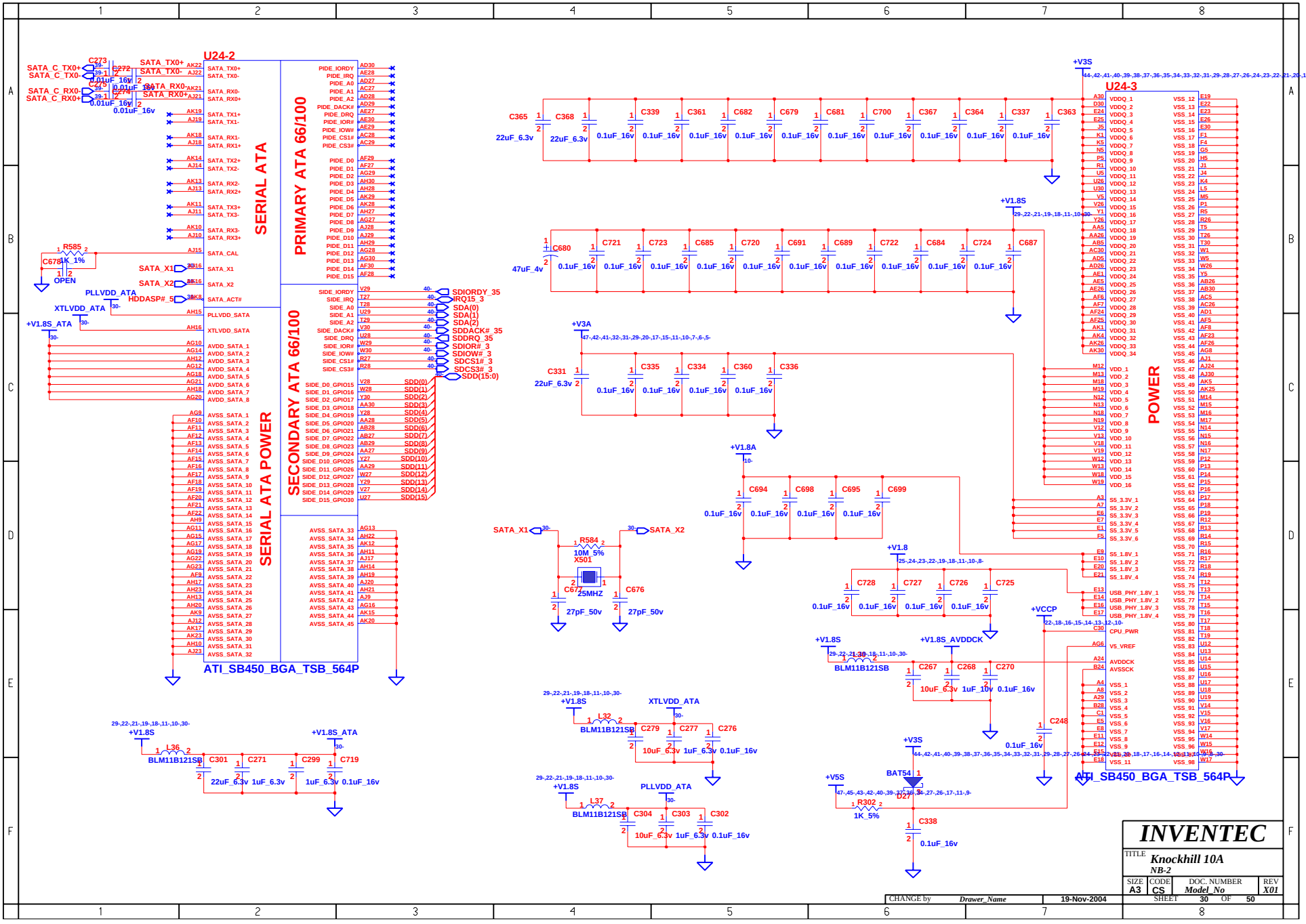
U24-2
SERIAL ATA
PRIMARY ATA 66/100
SECONDARY ATA 66/100
SERIAL ATA POWER
ATI_SB450_BGA_TSB_564P
U24-3
POWER
ATI_SB450_BGA_TSB_564P
SATA_C_TX0+
SATA_C_TX0-
SATA_C_RX0-
SATA_C_RX0+
SATA_TX0+
SATA_TX0-
SATA_RX0-
SATA_RX0+
SATA_X1
SATA_X2
HDDASP#_5
PLLVDD_ATA
XTLVDD_ATA
+V1.8S_ATA
SDIORDY_35
IRQ15_3
SDA(0)
SDA(1)
SDA(2)
SDDACK#_35
SDDRQ_35
SDIOR#_3
SDIOW#_3
SDCS1#_3
SDCS3#_3
SDD(15:0)
+V3S
+V3A
+V1.8A
+V1.8S
+V1.8
+VCCP
+V1.8S_AVDDCK
+V5S
BAT54
D27
R302
1K_5%
R584
10M_5%
X501
25MHZ
C677
C676
27pF_50v
BLM11B121SB
L36
L32
L37
C301
C271
C299
C719
C279
C277
C276
C304
C303
C302
C338
C248
C267
C268
C270
C728
C727
C726
C725
C694
C698
C695
C699
C331
C335
C334
C360
C336
C365
C368
C339
C361
C682
C679
C681
C700
C367
C364
C337
C363
C680
C721
C723
C685
C720
C691
C689
C722
C684
C724
C687
C678
R585
1K_1%
OPEN
C273
C272
C249
0.01uF_16v
22uF_6.3v
0.1uF_16v
10uF_6.3v
1uF_6.3v
1uF_10v
47uF_4v
INVENTEC
TITLE
Knockhill 10A
NB-2
SIZE A3
CODE CS
DOC. NUMBER Model_No
REV X01
CHANGE by Drawer_Name
19-Nov-2004
SHEET 30 OF 50

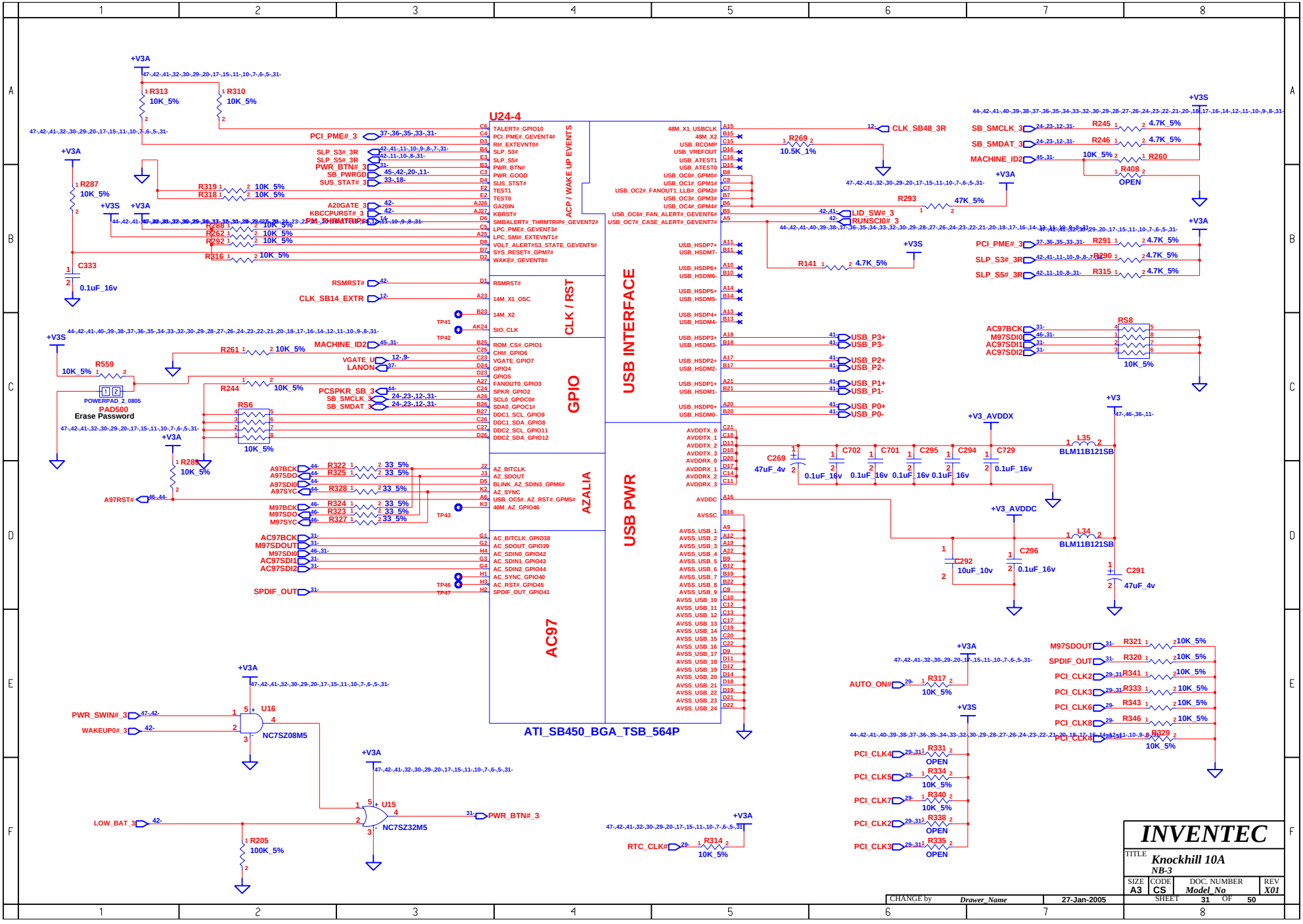
U24-4
ATI_SB450_BGA_TSB_564P
ACP / WAKE UP EVENTS
CLK / RST
GPIO
AZALIA
AC97
USB INTERFACE
USB PWR
TALERT#_GPIO10
PCI_PME#_GEVENT4#
RI#_EXTEVNT0#
SLP_S3#
SLP_S5#
PWR_BTN#
PWR_GOOD
SUS_STST#
TEST1
TEST0
GA20IN
KBRST#
SMBALERT#_THRMTRIP#_GEVENT2#
LPC_PME#_GEVENT3#
LPC_SMI#_EXTEVNT1#
VOLT_ALERT#S3_STATE_GEVENT5#
SYS_RESET#_GPM7#
WAKE#_GEVENT8#
RSMRST#
14M_X1_OSC
14M_X2
SIO_CLK
ROM_CS#_GPIO1
CHI#_GPIO6
VGATE_GPIO7
GPIO4
GPIO5
FANOUT0_GPIO3
SPKR_GPIO2
SCL0_GPOC0#
SDA0_GPOC1#
DDC1_SCL_GPIO9
DDC1_SDA_GPIO8
DDC2_SCL_GPIO11
DDC2_SDA_GPIO12
AZ_BITCLK
AZ_SDOUT
BLINK_AZ_SDIN3_GPM6#
AZ_SYNC
USB_OC5#_AZ_RST#_GPM5#
48M_AZ_GPIO46
AC_BITCLK_GPIO38
AC_SDOUT_GPIO39
AC_SDIN0_GPIO42
AC_SDIN1_GPIO43
AC_SDIN2_GPIO44
AC_SYNC_GPIO40
AC_RST#_GPIO45
SPDIF_OUT_GPIO41
48M_X1_USBCLK
48M_X2
USB_RCOMP
USB_VREFOUT
USB_ATEST1
USB_ATEST0
USB_OC0#_GPM0#
USB_OC1#_GPM1#
USB_OC2#_FANOUT1_LLB#_GPM2#
USB_OC3#_GPM3#
USB_OC4#_GPM4#
USB_OC6#_FAN_ALERT#_GEVENT6#
USB_OC7#_CASE_ALERT#_GEVENT7#
USB_HSDP7+
USB_HSDM7-
USB_HSDP6+
USB_HSDM6-
USB_HSDP5+
USB_HSDM5-
USB_HSDP4+
USB_HSDM4-
USB_HSDP3+
USB_HSDM3-
USB_HSDP2+
USB_HSDM2-
USB_HSDP1+
USB_HSDM1-
USB_HSDP0+
USB_HSDM0-
AVDDTX_0
AVDDTX_1
AVDDTX_2
AVDDTX_3
AVDDRX_0
AVDDRX_1
AVDDRX_2
AVDDRX_3
AVDDC
AVSSC
AVSS_USB_1
AVSS_USB_2
AVSS_USB_3
AVSS_USB_4
AVSS_USB_5
AVSS_USB_6
AVSS_USB_7
AVSS_USB_8
AVSS_USB_9
AVSS_USB_10
AVSS_USB_11
AVSS_USB_12
AVSS_USB_13
AVSS_USB_14
AVSS_USB_15
AVSS_USB_16
AVSS_USB_17
AVSS_USB_18
AVSS_USB_19
AVSS_USB_20
AVSS_USB_21
AVSS_USB_22
AVSS_USB_23
AVSS_USB_24
+V3A
+V3S
+V3
+V3_AVDDX
+V3_AVDDC
R313 10K_5%
R310 10K_5%
R287 10K_5%
R319 10K_5%
R318 10K_5%
R288 10K_5%
R262 10K_5%
R292 10K_5%
R316 10K_5%
C333 0.1uF_16v
R559 10K_5%
POWERPAD_2_0805
PAD500
Erase Password
R261 10K_5%
R244 10K_5%
RS6 10K_5%
R285 10K_5%
R322 33_5%
R325 33_5%
R328 33_5%
R324 33_5%
R323 33_5%
R327 33_5%
U16
NC7SZ08M5
U15
NC7SZ32M5
R205 100K_5%
R269 10.5K_1%
R293 47K_5%
R141 4.7K_5%
R245 4.7K_5%
R246 4.7K_5%
R260 10K_5%
R408 OPEN
R291 4.7K_5%
R290 4.7K_5%
R315 4.7K_5%
RS8 10K_5%
C269 47uF_4v
C702 0.1uF_16v
C701 0.1uF_16v
C295 0.1uF_16v
C294 0.1uF_16v
C729 0.1uF_16v
L35 BLM11B121SB
C292 10uF_10v
C296 0.1uF_16v
L34 BLM11B121SB
C291 47uF_4v
R317 10K_5%
R321 10K_5%
R320 10K_5%
R341 10K_5%
R333 10K_5%
R343 10K_5%
R346 10K_5%
R329 10K_5%
R331 OPEN
R334 10K_5%
R340 10K_5%
R338 OPEN
R335 OPEN
R314 10K_5%
CLK_SB48_3R
LID_SW#_3
RUNSCI0#_3
USB_P3+
USB_P3-
USB_P2+
USB_P2-
USB_P1+
USB_P1-
USB_P0+
USB_P0-
PCI_PME#_3
SB_PWRGD
SUS_STAT#_3
A20GATE_3
KBCCPURST#_3
PWR_BTN#_3
RSMRST#
CLK_SB14_EXTR
MACHINE_ID2
VGATE_U
LANON
PCSPKR_SB_3
SB_SMCLK_3
SB_SMDAT_3
A97BCK
A97SDO
A97SDI0
A97SYC
A97RST#
M97BCK
M97SDO
M97SYC
AC97BCK
M97SDOUT
M97SDI0
AC97SDI2
SPDIF_OUT
PWR_SWIN#_3
WAKEUP0#_3
LOW_BAT_3
RTC_CLK#
AUTO_ON#
M97SDI0
AC97SDI1
PCI_CLK2
PCI_CLK3
PCI_CLK6
PCI_CLK8
PCI_CLK4
PCI_CLK5
PCI_CLK7
TP41
TP42
TP43
TP46
TP47
INVENTEC
TITLE
Knockhill 10A
NB-3
SIZE A3
CODE CS
DOC. NUMBER Model_No
REV X01
SHEET 31 OF 50
CHANGE by Drawer_Name
27-Jan-2005

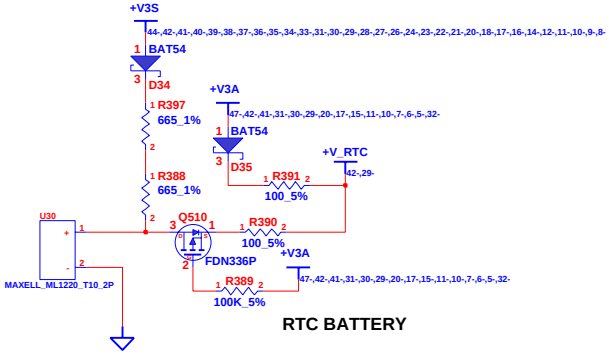

RTC BATTERY

CHANGE by	Drawer_Name	13-Sep-2005	

INVENTEC

TITLE *Knockhill 10A*
NB-4

SIZE	CODE	DOC. NUMBER	REV
A3	CS	*Model_No*	*X01*

SHEET 32 OF 50

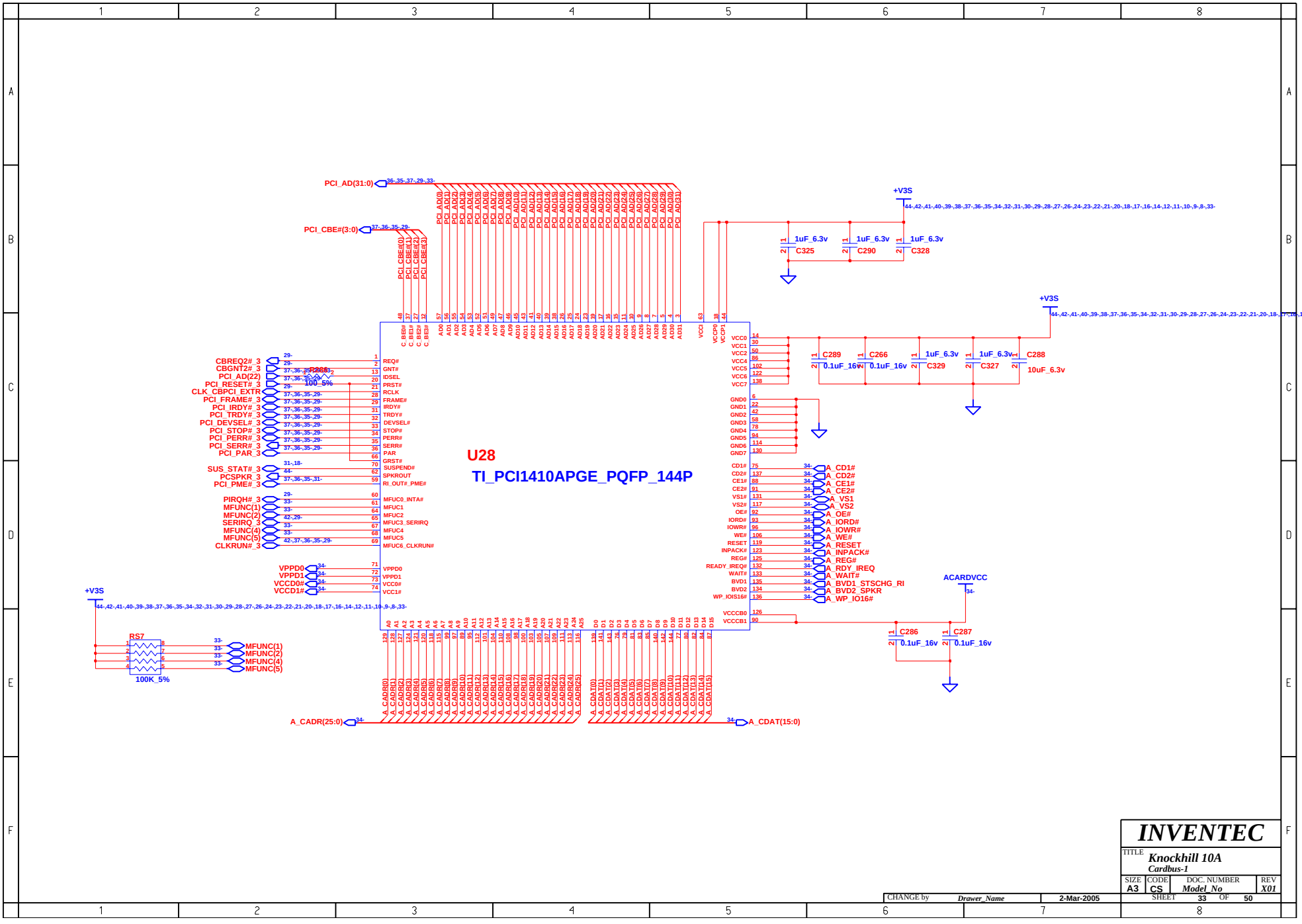

INVENTEC			
TITLE	Knockhill 10A Cardbus-1		
SIZE A3	CODE CS	DOC. NUMBER Model_No	REV X01
CHANGE by Drawer_Name	2-Mar-2005	SHEET 33 OF 50	

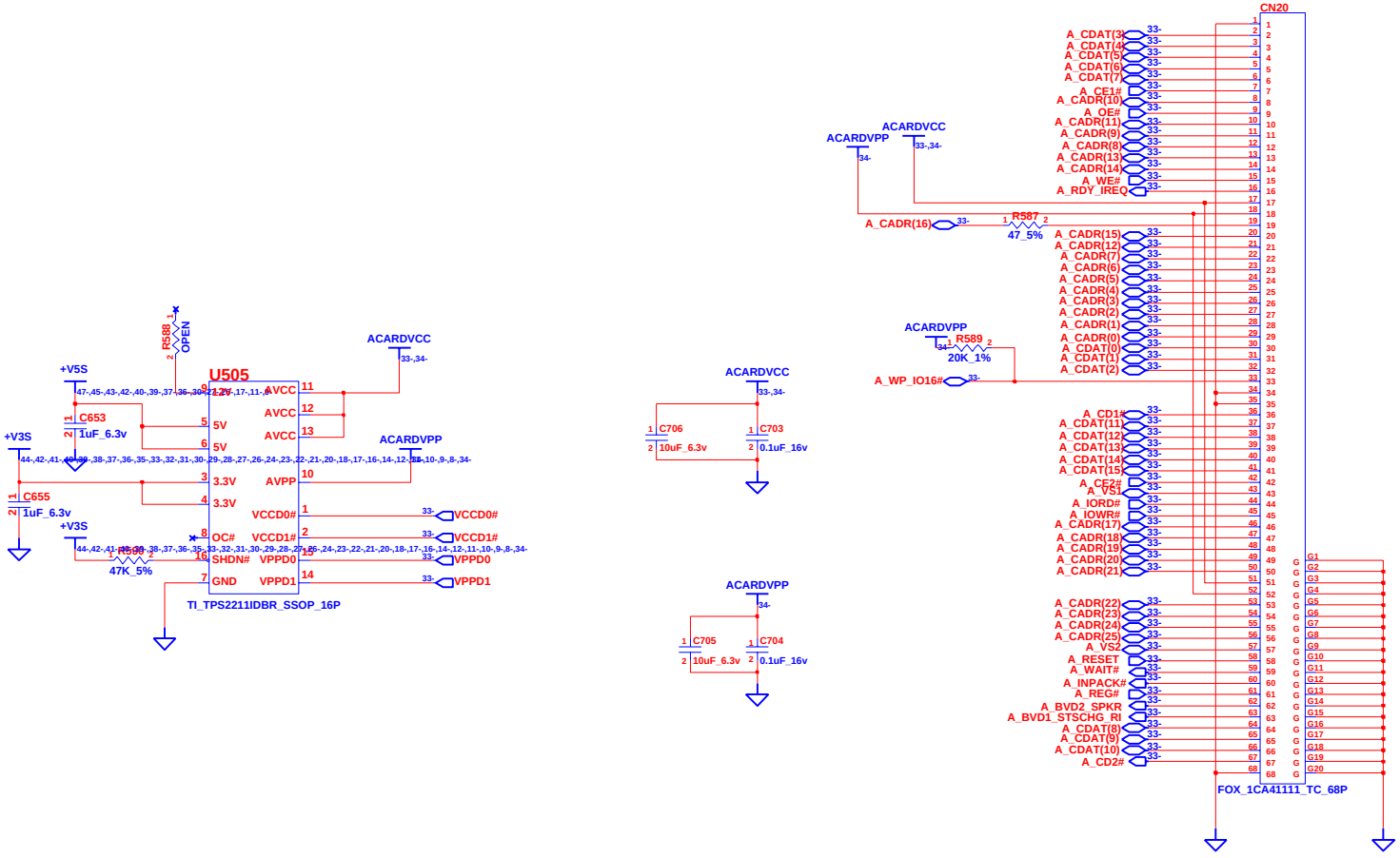

INVENTEC

TITLE
Knockhill 10A
Cardbus-2-PCMCIA

SIZE	CODE	DOC. NUMBER	REV
A3	CS	Model_No	X01

CHANGE by Drawer_Name 8-Aug-2005

SHEET 34 OF 50

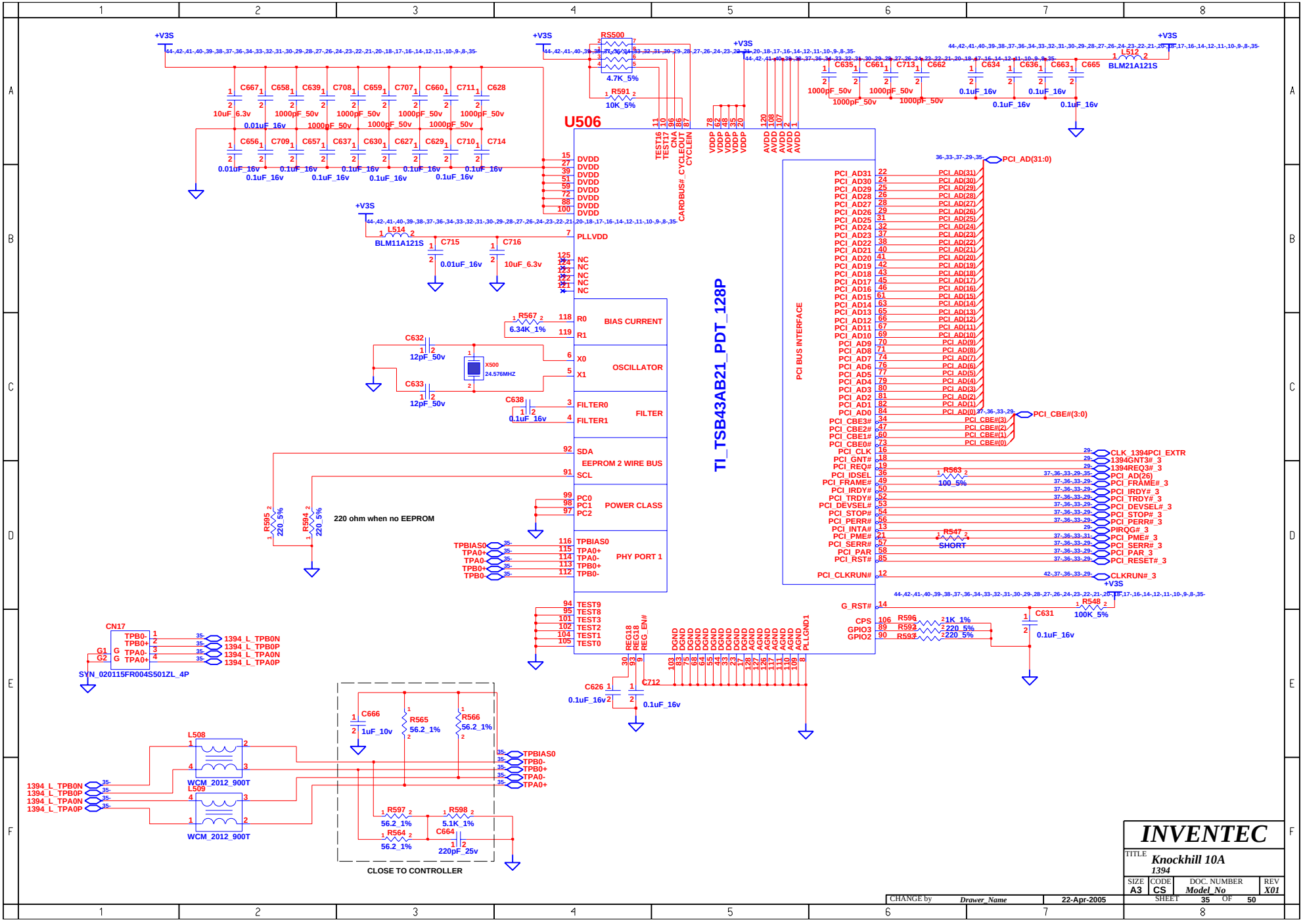
U506
TI_TSB43AB21_PDT_128P
PCI BUS INTERFACE
BIAS CURRENT
OSCILLATOR
FILTER
EEPROM 2 WIRE BUS
POWER CLASS
PHY PORT 1
+V3S
RS500
4.7K_5%
R591
10K_5%
L512
BLM21A121S
L514
BLM11A121S
C715
0.01uF_16v
C716
10uF_6.3v
R567
6.34K_1%
C632
12pF_50v
C633
12pF_50v
X500
24.576MHZ
C638
0.1uF_16v
R595
220_5%
R594
220_5%
220 ohm when no EEPROM
PCI_AD(31:0)
PCI_CBE#(3:0)
CLK_1394PCI_EXTR
1394GNT3#_3
1394REQ3#_3
PCI_AD(26)
PCI_FRAME#_3
PCI_IRDY#_3
PCI_TRDY#_3
PCI_DEVSEL#_3
PCI_STOP#_3
PCI_PERR#_3
PIRQG#_3
PCI_PME#_3
PCI_SERR#_3
PCI_PAR_3
PCI_RESET#_3
CLKRUN#_3
R563
100_5%
R547
SHORT
R548
100K_5%
C631
0.1uF_16v
R596
1K_1%
R592
220_5%
R593
220_5%
CN17
SYN_020115FR004S501ZL_4P
1394_L_TPB0N
1394_L_TPB0P
1394_L_TPA0N
1394_L_TPA0P
L508
WCM_2012_900T
L509
WCM_2012_900T
C666
1uF_10v
R565
56.2_1%
R566
56.2_1%
R597
56.2_1%
R598
5.1K_1%
R564
56.2_1%
C664
220pF_25v
CLOSE TO CONTROLLER
C626
0.1uF_16v
C712
0.1uF_16v
INVENTEC
TITLE
Knockhill 10A
1394
SIZE A3
CODE CS
DOC. NUMBER Model_No
REV X01
SHEET 35 OF 50
CHANGE by Drawer_Name
22-Apr-2005

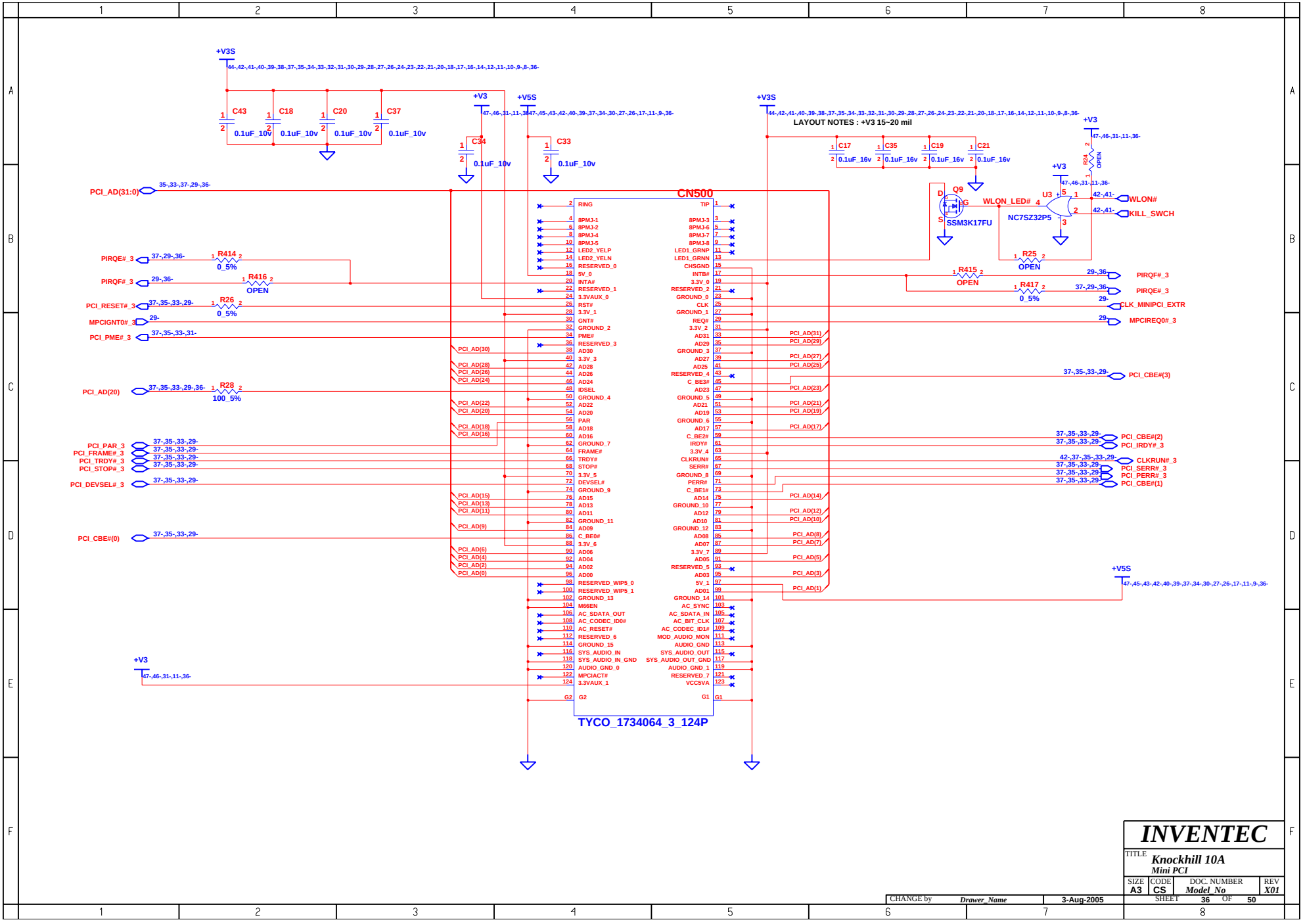
+V3S
C43
C18
C20
C37
0.1uF_10v
+V3
+V5S
C34
C33
LAYOUT NOTES : +V3 15~20 mil
C17
C35
C19
C21
0.1uF_16v
R24
OPEN
Q9
SSM3K17FU
WLON_LED#
U3
NC7SZ32P5
WLON#
KILL_SWCH
R25
OPEN
R415
OPEN
R417
0_5%
PIRQF#_3
PIRQE#_3
CLK_MINIPCI_EXTR
MPCIREQ0#_3
PCI_CBE#(3)
PCI_CBE#(2)
PCI_IRDY#_3
CLKRUN#_3
PCI_SERR#_3
PCI_PERR#_3
PCI_CBE#(1)
PCI_AD(31:0)
CN500
TYCO_1734064_3_124P
PIRQE#_3
PIRQF#_3
R414
0_5%
R416
OPEN
PCI_RESET#_3
R26
0_5%
MPCIGNT0#_3
PCI_PME#_3
PCI_AD(20)
R28
100_5%
PCI_PAR_3
PCI_FRAME#_3
PCI_TRDY#_3
PCI_STOP#_3
PCI_DEVSEL#_3
PCI_CBE#(0)
+V5S
INVENTEC
TITLE
Knockhill 10A
Mini PCI
SIZE A3
CODE CS
DOC. NUMBER Model_No
REV X01
CHANGE by Drawer_Name
3-Aug-2005
SHEET 36 OF 50

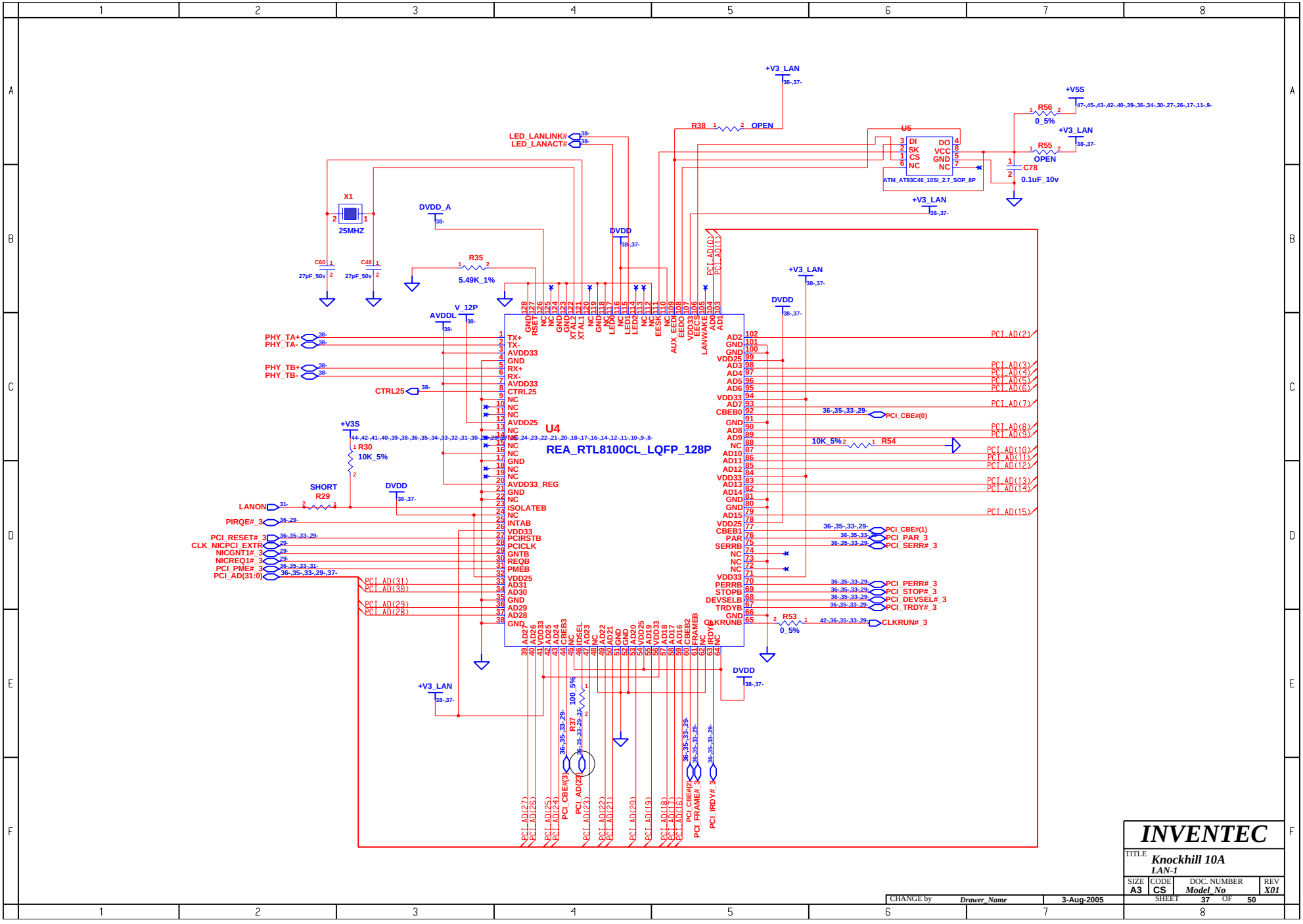
U4
REA_RTL8100CL_LQFP_128P
U5
ATM_AT93C46_10SI_2.7_SOP_8P
X1
25MHZ
+V3_LAN
+V5S
DVDD
DVDD_A
AVDDL
V_12P
+V3S
LED_LANLINK#
LED_LANACT#
PHY_TA+
PHY_TA-
PHY_TB+
PHY_TB-
CTRL25
LANON
PIRQE#_3
PCI_RESET#_3
CLK_NICPCI_EXTR
NICGNT1#_3
NICREQ1#_3
PCI_PME#_3
PCI_AD(31:0)
PCI_CBE#(0)
PCI_CBE#(1)
PCI_PAR_3
PCI_SERR#_3
PCI_PERR#_3
PCI_STOP#_3
PCI_DEVSEL#_3
PCI_TRDY#_3
CLKRUN#_3
PCI_CBE#(3)
PCI_CBE#(2)
PCI_FRAME#_3
PCI_IRDY#_3
R38 OPEN
R56 0_5%
R55 OPEN
C78 0.1uF_10v
R35 5.49K_1%
C60 27pF_50v
C48 27pF_50v
R30 10K_5%
SHORT R29
R54 10K_5%
R53 0_5%
R37 100_5%
INVENTEC
TITLE Knockhill 10A
LAN-1
SIZE A3
CODE CS
DOC. NUMBER Model_No
REV X01
SHEET 37 OF 50
CHANGE by Drawer_Name
3-Aug-2005

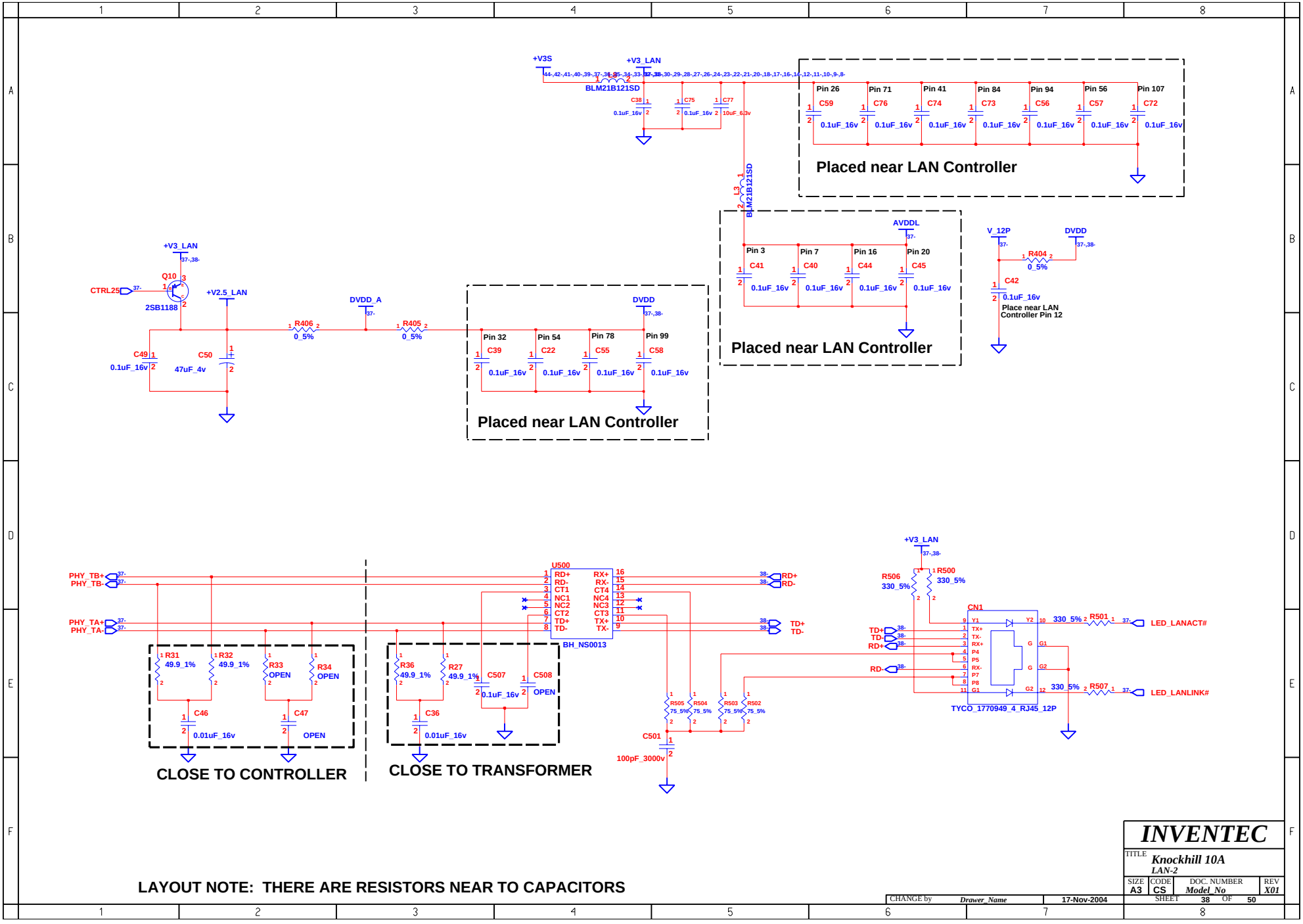

LAYOUT NOTE: THERE ARE RESISTORS NEAR TO CAPACITORS

CHANGE by	Drawer_Name	17-Nov-2004	

INVENTEC

TITLE: Knockhill 10A LAN-2

SIZE	CODE	DOC. NUMBER	REV
A3	CS	Model_No	X01

SHEET 38 OF 50

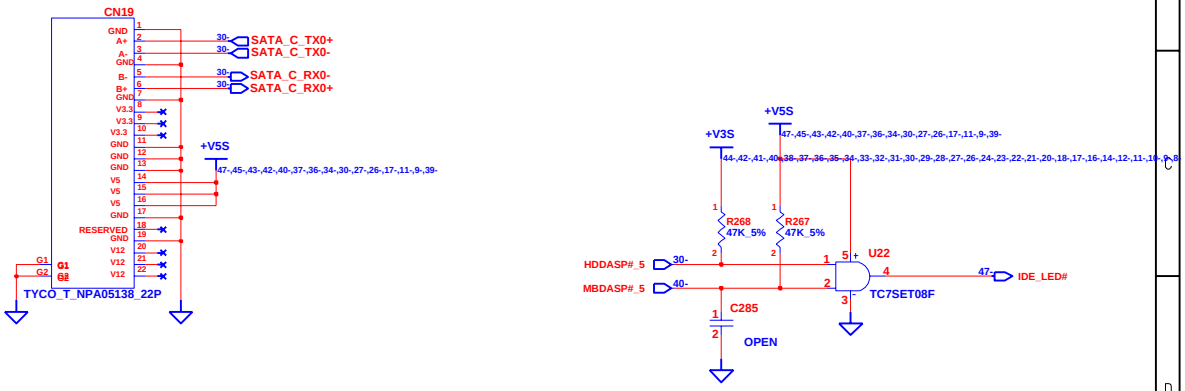

CHANGE by	Drawer_Name	10-Dec-2004	

INVENTEC

TITLE *Knockhill 10A*
HDD

SIZE	CODE	DOC. NUMBER	REV
A3	CS	*Model_No*	*X01*

SHEET 39 OF 50

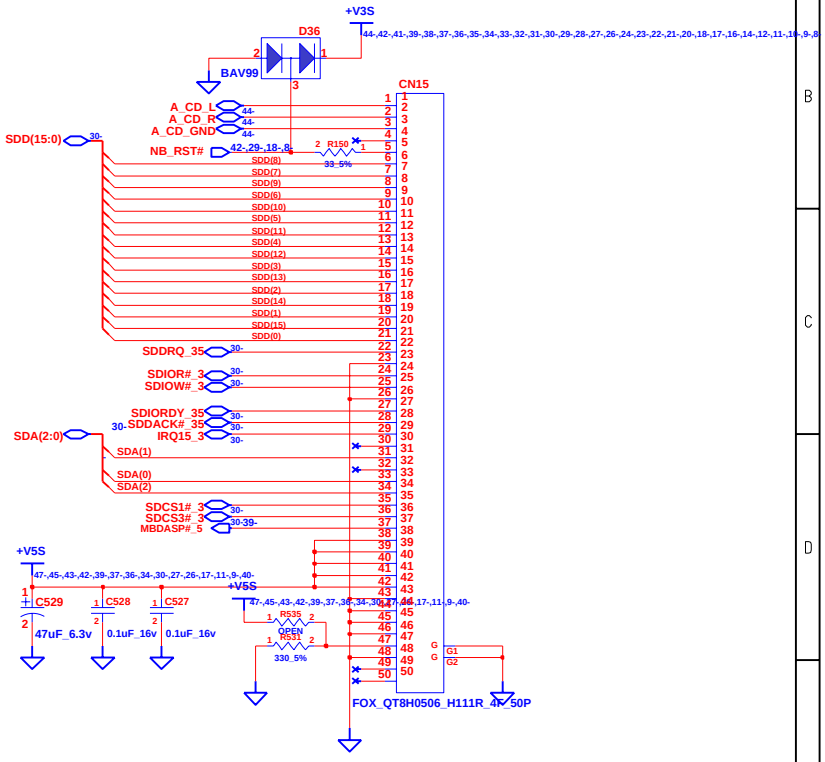

INVENTEC

TITLE **Knockhill 10A**
ODD

SIZE	CODE	DOC. NUMBER	REV
A3	CS	Model_No	X01

CHANGE by Drawer_Name 21-Dec-2004

SHEET 40 OF 50

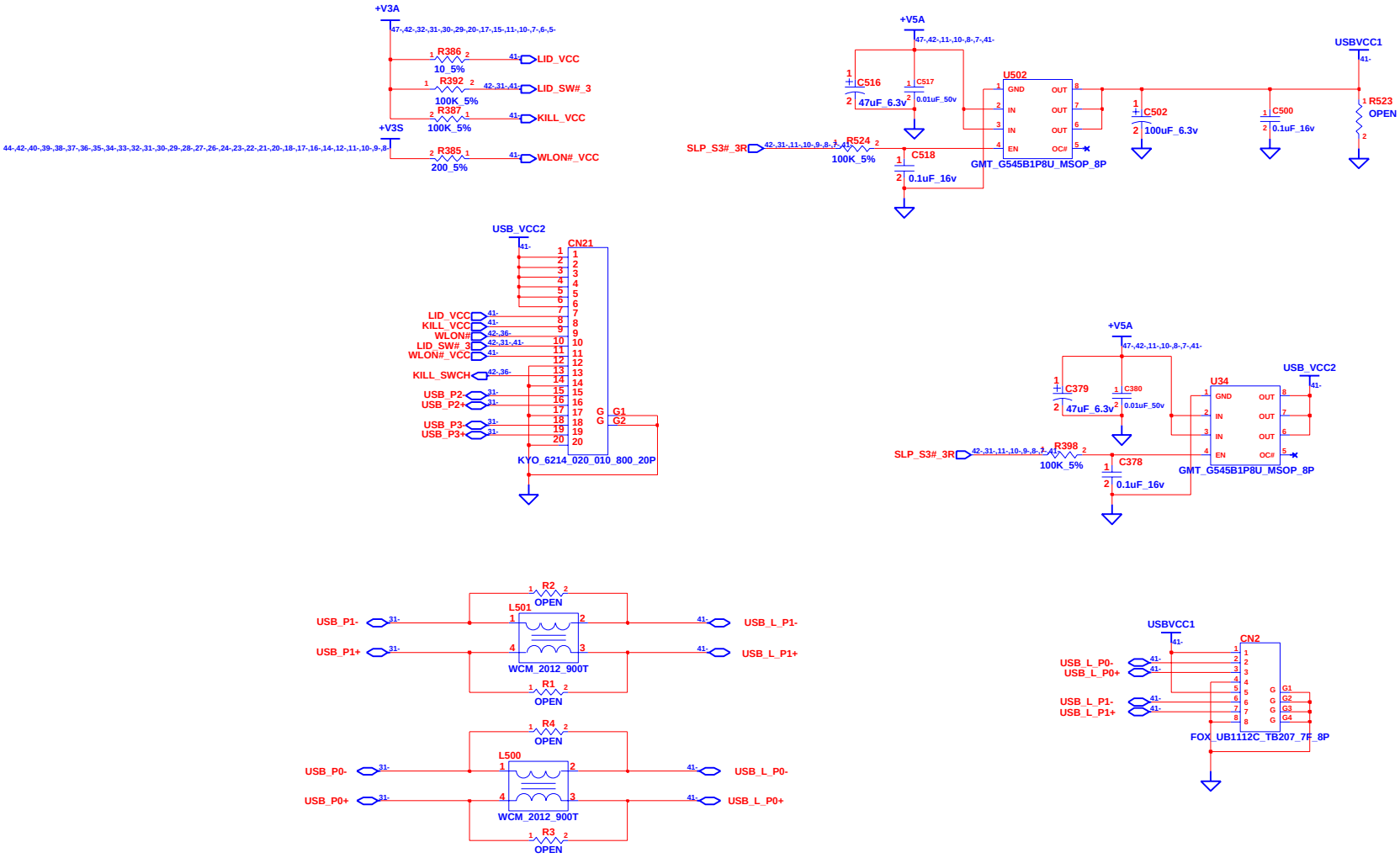

INVENTEC

TITLE **Knockhill 10A**
USB / S-Video

SIZE	CODE	DOC. NUMBER	REV
A3	CS	*Model_No*	*X01*

CHANGE by *Drawer_Name* 11-Nov-2004

SHEET 41 OF 50

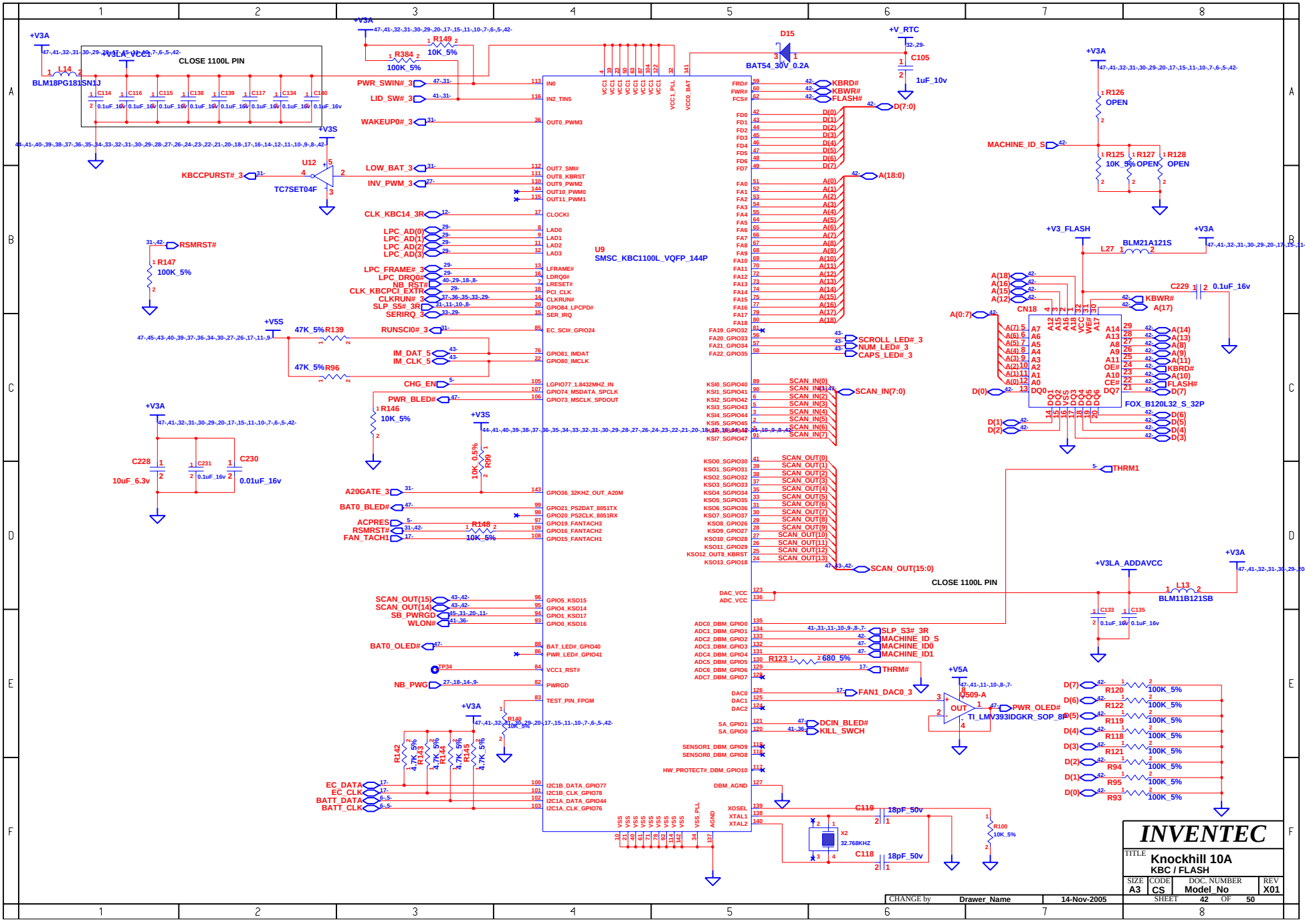
U9
SMSC_KBC1100L_VQFP_144P
CLOSE 1100L PIN
BLM18PG181SN1J
L14
R149 10K_5%
R384 100K_5%
D15
BAT54_30V_0.2A
+V_RTC
C105
1uF_10v
U12
TC7SET04F
KBCCPURST#_3
PWR_SWIN#_3
LID_SW#_3
WAKEUP0#_3
LOW_BAT_3
INV_PWM_3
CLK_KBC14_3R
LPC_AD(0)
LPC_AD(1)
LPC_AD(2)
LPC_AD(3)
LPC_FRAME#_3
LPC_DRQ0#
NB_RST#
CLK_KBCPCI_EXTR
CLKRUN#_3
SLP_S5#_3R
SERIRQ_3
RSMRST#
R147 100K_5%
RUNSCI0#_3
IM_DAT_5
IM_CLK_5
CHG_EN
PWR_BLED#
R146 10K_5%
R139 47K_5%
R96 47K_5%
R99 10K_0.5%
A20GATE_3
BAT0_BLED#
ACPRES
RSMRST#
FAN_TACH1
R148 10K_5%
SCAN_OUT(15)
SCAN_OUT(14)
SB_PWRGD
WLON#
BAT0_OLED#
NB_PWG
R140 10K_5%
R142 4.7K_5%
R143 4.7K_5%
R144 4.7K_5%
R145 4.7K_5%
EC_DATA
EC_CLK
BATT_DATA
BATT_CLK
KBRD#
KBWR#
FLASH#
D(7:0)
A(18:0)
SCROLL_LED#_3
NUM_LED#_3
CAPS_LED#_3
SCAN_IN(7:0)
SCAN_OUT(15:0)
SLP_S3#_3R
MACHINE_ID_S
MACHINE_ID0
MACHINE_ID1
R123 680_5%
THRM#
FAN1_DAC0_3
DCIN_BLED#
KILL_SWCH
PWR_OLED#
TI_LMV393IDGKR_SOP_8
C119 18pF_50v
C118 18pF_50v
X2 32.768KHZ
R100 10K_5%
R126 OPEN
MACHINE_ID_S
R125 10K_5%
R127 OPEN
R128 OPEN
L27 BLM21A121S
C229 0.1uF_16v
CN18
FOX_B120L32_S_32P
THRM1
L13 BLM11B121SB
C133 0.1uF_16v
C135 0.1uF_16v
R120 100K_5%
R122 100K_5%
R119 100K_5%
R118 100K_5%
R121 100K_5%
R94 100K_5%
R95 100K_5%
R93 100K_5%
C228 10uF_6.3v
C231 0.1uF_16v
C230 0.01uF_16v
INVENTEC
TITLE Knockhill 10A
KBC / FLASH
SIZE A3
CODE CS
DOC. NUMBER Model_No
REV X01
SHEET 42 OF 50
CHANGE by Drawer_Name
14-Nov-2005

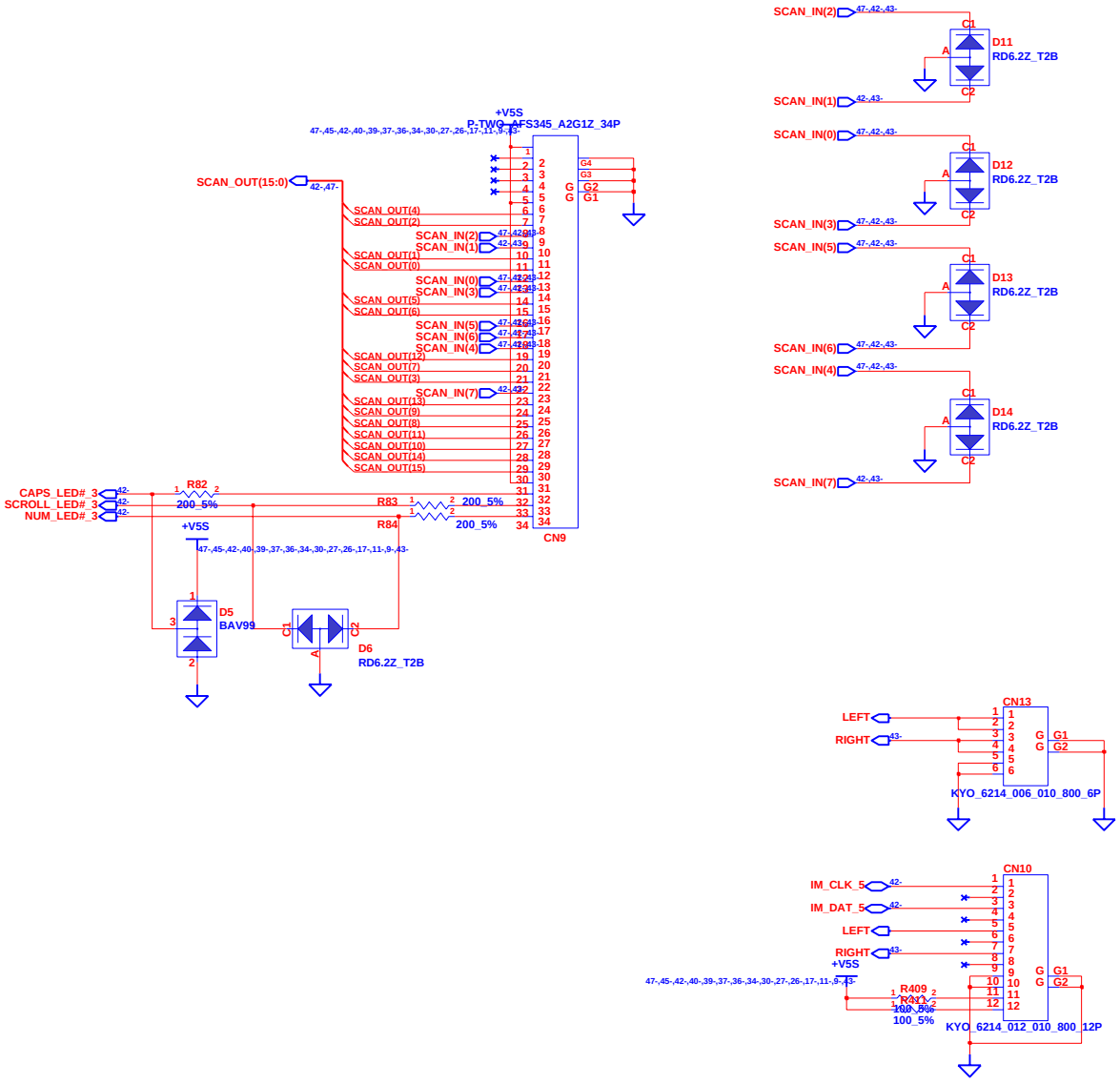

INVENTEC

TITLE **Knockhill 10A**
Keyboard

SIZE	CODE	DOC. NUMBER	REV
A3	CS	*Model_No*	*X01*

CHANGE by *Drawer_Name* 19-Jan-2005

SHEET 43 OF 50

Change ALC250 from version B(6019A0198501) to version D(6019A0198502) from CS-R BOM

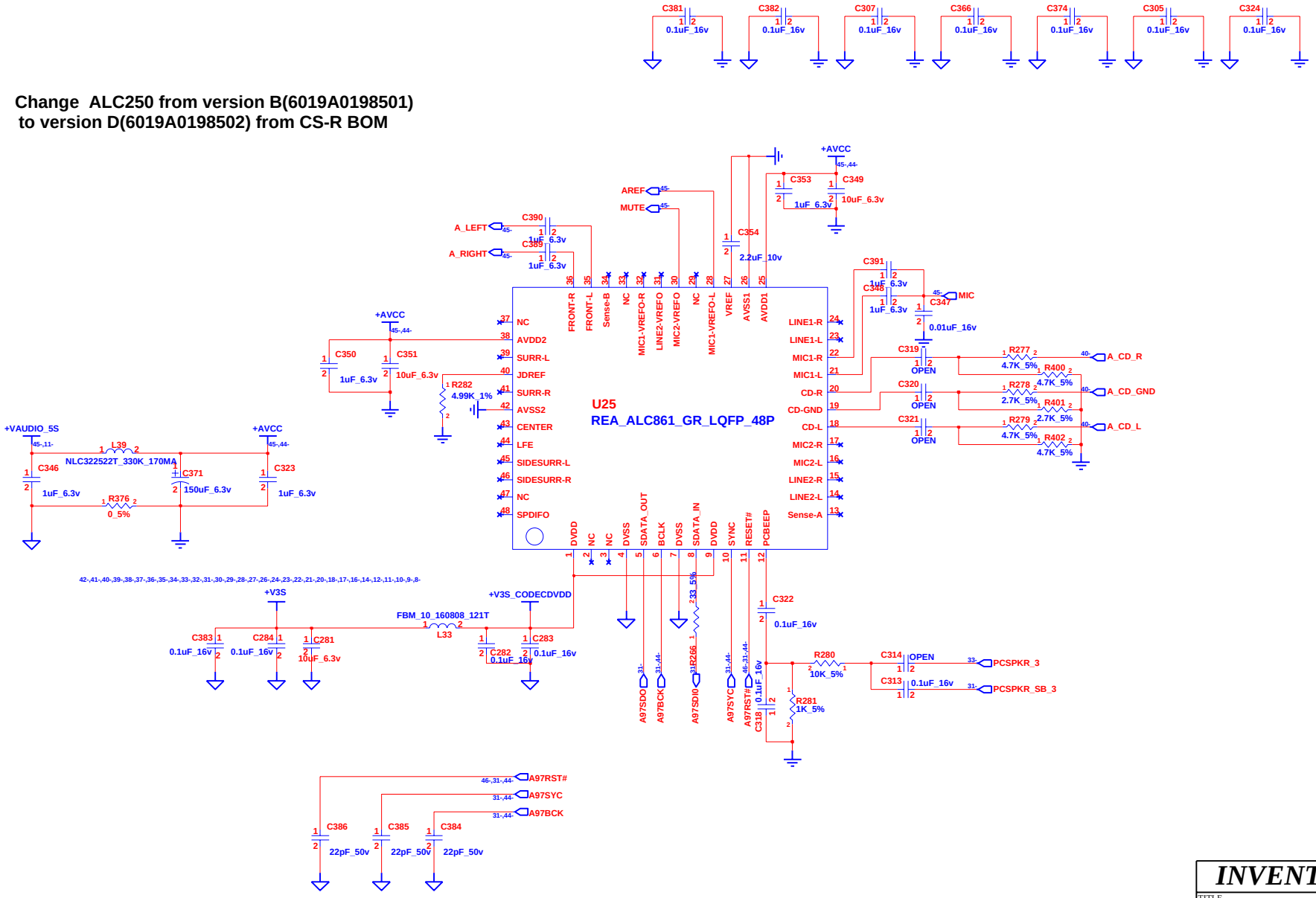

CHANGE by	Drawer_Name	10-Nov-2005	

INVENTEC

TITLE: *Knockhill 10A*
Audio-1-Codec

SIZE	CODE	DOC. NUMBER	REV
A3	CS	*Model_No*	*X01*

SHEET 44 OF 50

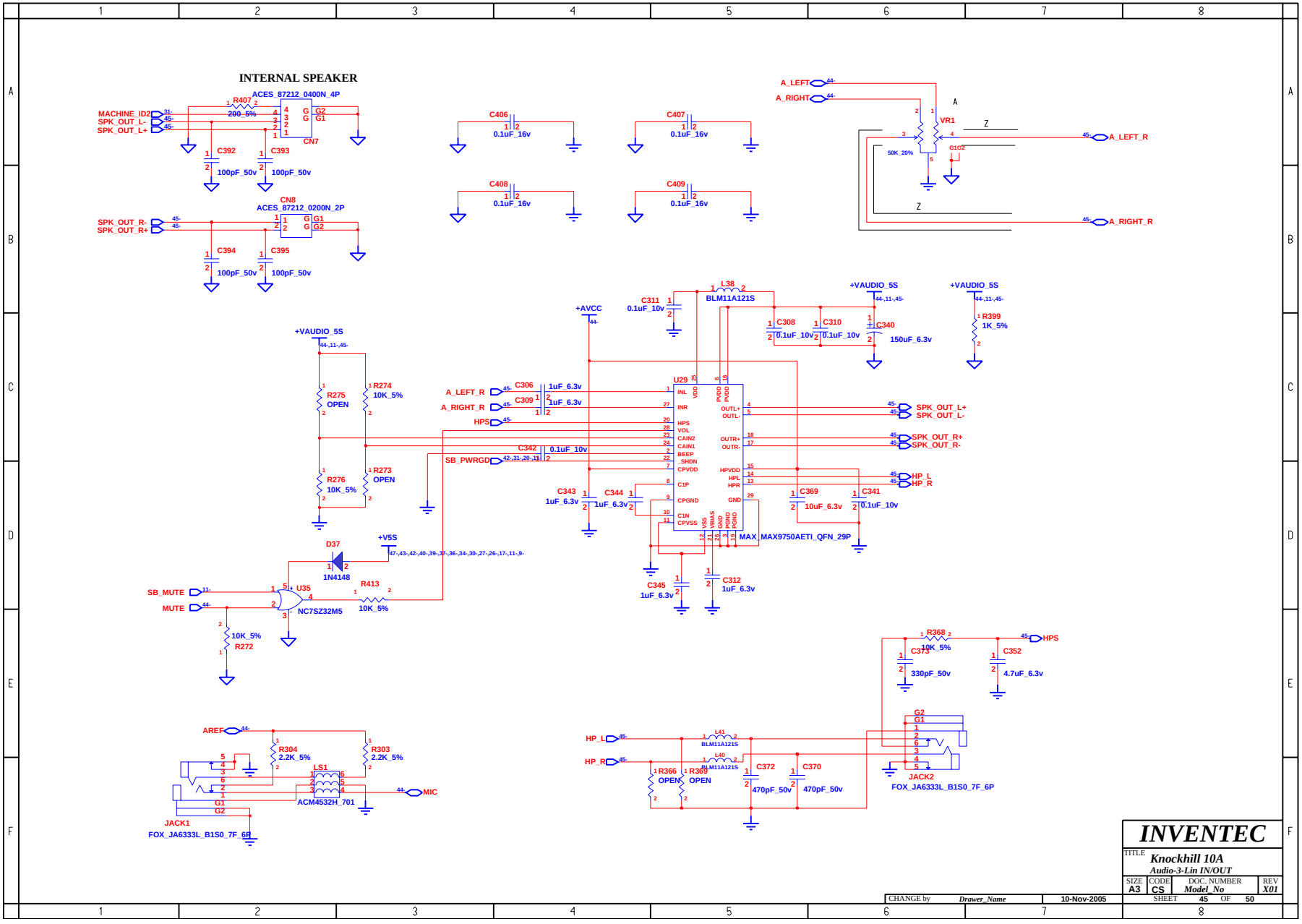
INTERNAL SPEAKER
ACES_87212_0400N_4P
CN7
MACHINE_ID2
SPK_OUT_L-
SPK_OUT_L+
R407
200_5%
C392
100pF_50v
C393
100pF_50v
CN8
ACES_87212_0200N_2P
SPK_OUT_R-
SPK_OUT_R+
C394
100pF_50v
C395
100pF_50v
C406
0.1uF_16v
C407
0.1uF_16v
C408
0.1uF_16v
C409
0.1uF_16v
A_LEFT
A_RIGHT
VR1
50K_20%
A_LEFT_R
A_RIGHT_R
L38
BLM11A121S
C311
0.1uF_10v
+AVCC
+VAUDIO_5S
C308
0.1uF_10v
C310
0.1uF_10v
C340
150uF_6.3v
R399
1K_5%
R275
OPEN
R274
10K_5%
R276
10K_5%
R273
OPEN
C306
1uF_6.3v
C309
1uF_6.3v
C342
0.1uF_10v
SB_PWRGD
HPS
U29
MAX_MAX9750AETI_QFN_29P
SPK_OUT_L+
SPK_OUT_L-
SPK_OUT_R+
SPK_OUT_R-
HP_L
HP_R
C343
1uF_6.3v
C344
1uF_6.3v
C369
10uF_6.3v
C341
0.1uF_10v
C345
1uF_6.3v
C312
1uF_6.3v
D37
1N4148
+V5S
SB_MUTE
MUTE
U35
NC7SZ32M5
R413
10K_5%
R272
10K_5%
R368
10K_5%
C379
330pF_50v
C352
4.7uF_6.3v
AREF
R304
2.2K_5%
R303
2.2K_5%
LS1
ACM4532H_701
MIC
JACK1
FOX_JA6333L_B1S0_7F_6P
HP_L
HP_R
L41
BLM11A121S
L40
BLM11A121S
R366
OPEN
R369
OPEN
C372
470pF_50v
C370
470pF_50v
JACK2
FOX_JA6333L_B1S0_7F_6P
INVENTEC
TITLE
Knockhill 10A
Audio-3-Lin IN/OUT
SIZE A3
CODE CS
DOC. NUMBER Model_No
REV X01
SHEET 45 OF 50
CHANGE by Drawer_Name
10-Nov-2005

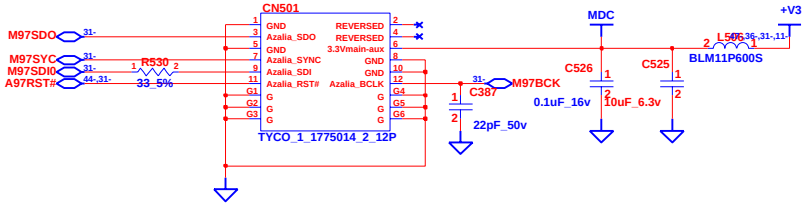

INVENTEC

TITLE **Knockhill 10A**
MDC

SIZE	CODE	DOC. NUMBER	REV
A3	CS	Model_No	X01

CHANGE by Drawer_Name 8-Nov-2004

SHEET 46 OF 50

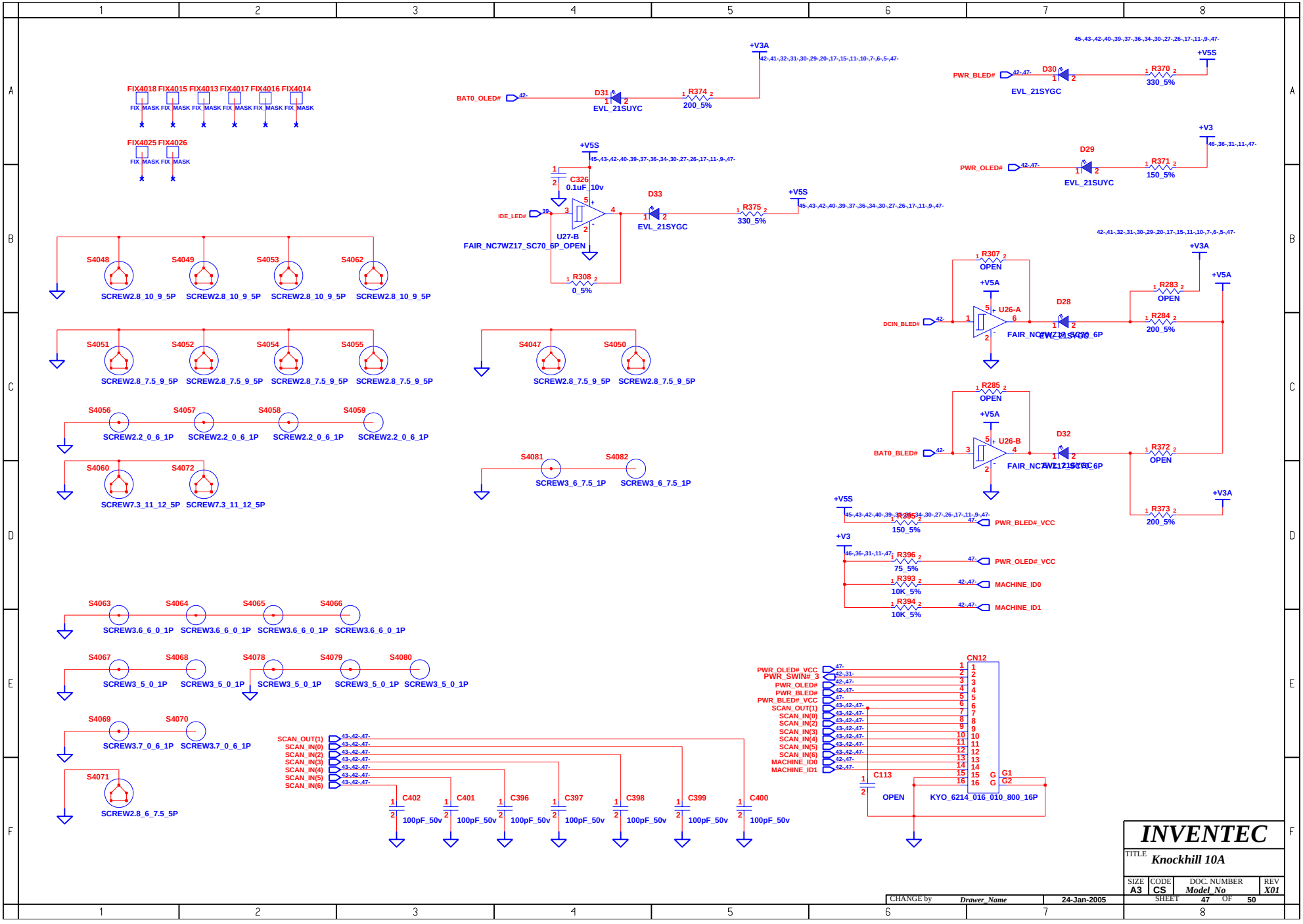
FIX4018 FIX4015 FIX4013 FIX4017 FIX4016 FIX4014
FIX_MASK FIX_MASK FIX_MASK FIX_MASK FIX_MASK FIX_MASK
FIX4025 FIX4026
FIX_MASK FIX_MASK
BAT0_OLED#
D31
EVL_21SUYC
R374
200_5%
+V3A
PWR_BLED#
D30
EVL_21SYGC
R370
330_5%
+V5S
PWR_OLED#
D29
EVL_21SUYC
R371
150_5%
+V3
C326
0.1uF_10v
+V5S
IDE_LED#
U27-B
FAIR_NC7WZ17_SC70_6P_OPEN
D33
EVL_21SYGC
R375
330_5%
R308
0_5%
S4048
S4049
S4053
S4062
SCREW2.8_10_9_5P
S4051
S4052
S4054
S4055
SCREW2.8_7.5_9_5P
S4047
S4050
SCREW2.8_7.5_9_5P
S4056
S4057
S4058
S4059
SCREW2.2_0_6_1P
S4060
S4072
SCREW7.3_11_12_5P
S4081
S4082
SCREW3_6_7.5_1P
R307
OPEN
+V5A
U26-A
DCIN_BLED#
D28
R283
OPEN
R284
200_5%
R285
OPEN
U26-B
BAT0_BLED#
D32
R372
OPEN
R373
200_5%
R395
150_5%
PWR_BLED#_VCC
R396
75_5%
PWR_OLED#_VCC
R393
10K_5%
MACHINE_ID0
R394
10K_5%
MACHINE_ID1
S4063
S4064
S4065
S4066
SCREW3.6_6_0_1P
S4067
S4068
S4078
S4079
S4080
SCREW3_5_0_1P
S4069
S4070
SCREW3.7_0_6_1P
S4071
SCREW2.8_6_7.5_5P
SCAN_OUT(1)
SCAN_IN(0)
SCAN_IN(2)
SCAN_IN(3)
SCAN_IN(4)
SCAN_IN(5)
SCAN_IN(6)
C402
C401
C396
C397
C398
C399
C400
100pF_50v
CN12
PWR_OLED# VCC
PWR_SWIN#_3
PWR_OLED#
PWR_BLED#
PWR_BLED# VCC
SCAN_OUT(1)
SCAN_IN(0)
SCAN_IN(2)
SCAN_IN(3)
SCAN_IN(4)
SCAN_IN(5)
SCAN_IN(6)
MACHINE_ID0
MACHINE_ID1
C113
OPEN
KYO_6214_016_010_800_16P
INVENTEC
TITLE
Knockhill 10A
SIZE A3
CODE CS
DOC. NUMBER Model_No
REV X01
CHANGE by Drawer_Name
24-Jan-2005
SHEET 47 OF 50

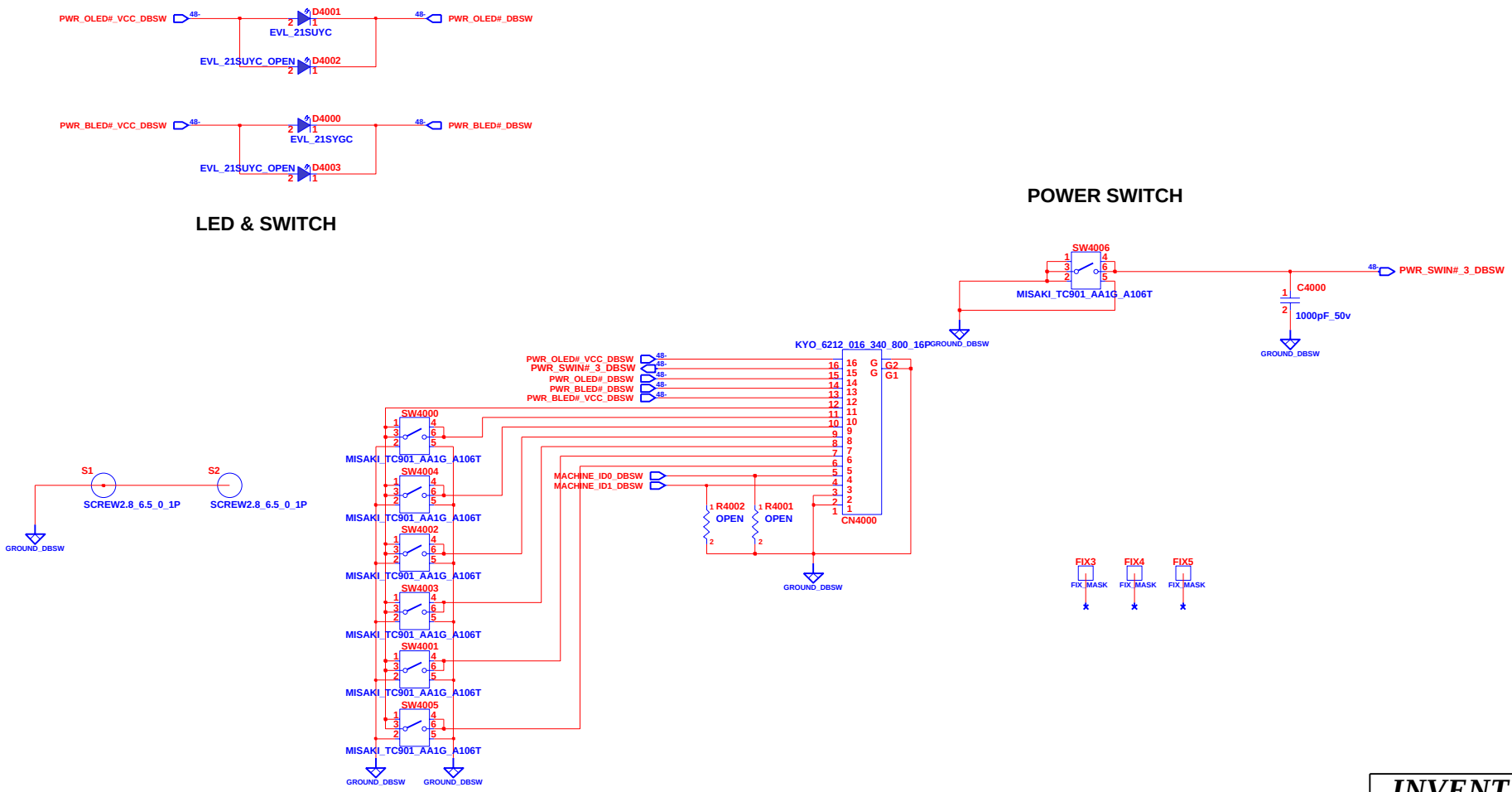

INVENTEC

TITLE **Knockhill 10A**
Buttom Board

SIZE	CODE	DOC. NUMBER	REV
A3	CS	Model_No	X01

CHANGE by Drawer_Name 8-Nov-2004

SHEET 48 OF 50

KILL SWITCH

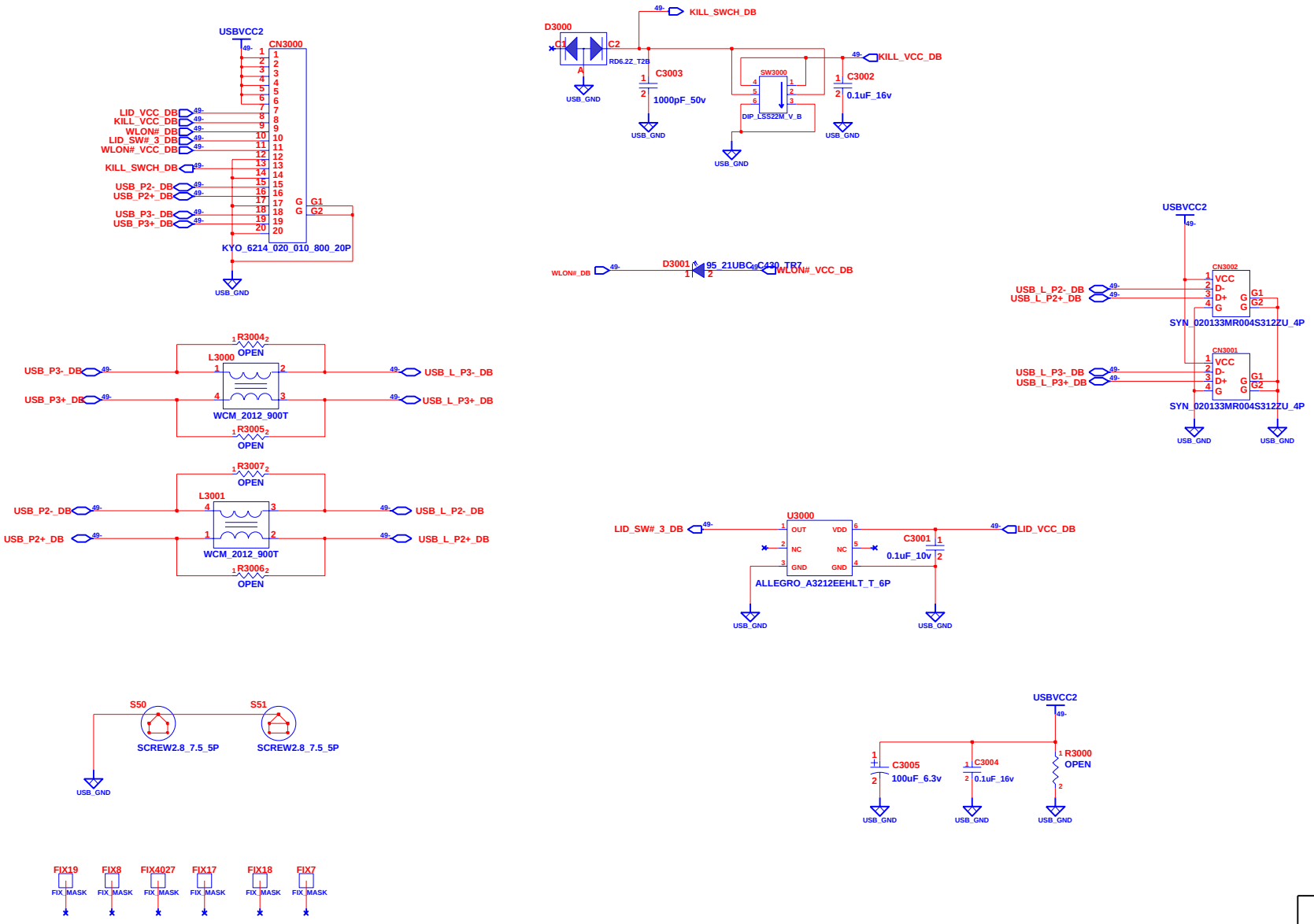

CHANGE by	Drawer_Name	6-Aug-2005	

INVENTEC

TITLE *Knockhill 10A*
USB/1394/SVIDEO Board

SIZE	CODE	DOC. NUMBER	REV
A3	CS	Model_No	X01

SHEET 49 OF 50

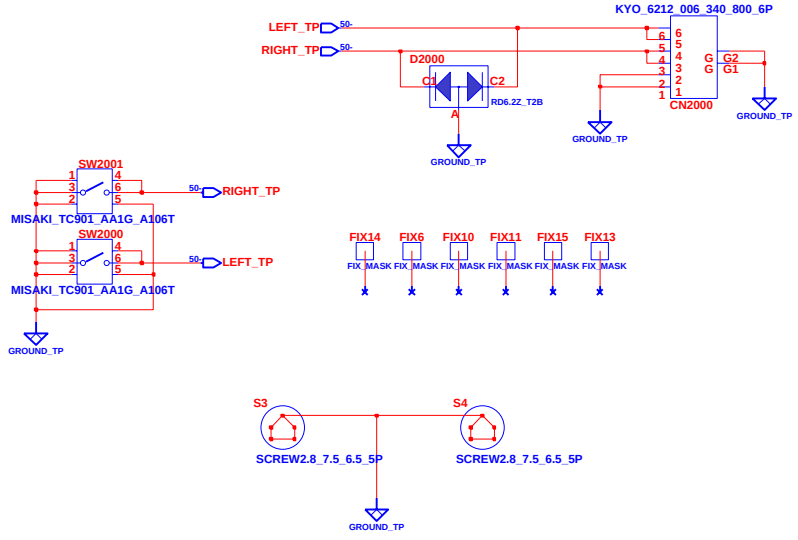

INVENTEC

TITLE **Knockhill 10A**
Touch Pad Board

SIZE	CODE	DOC. NUMBER	REV
A3	CS	Model_No	X01

CHANGE by Drawer_Name 8-Dec-2004

SHEET 50 OF 50