THIS DRAWING AND SPECIFICATIONS, HEREIN, ARE THE PROPERTY OF INVENTEC CORPORATION AND SHALL NOT BE REPODUCED, COPIED, OR USED IN WHOLE OR IN PART AS THE BASIS FOR THE MANUFACTURE OR SALE OF ITEMS WITHOUT WRITTEN PERMISSION, INVENTEC CORPORATION 2009 ALL RIGHT RESERVED

Perugia 10MG DDR3

CS Build(A01)

2009.07.20

DATE	CHANGE NO.	REV

	EE	DATE	POWER	DATE
DRAWER	Eric Lai		Bin-Zhi Lo	
DESIGN	Eric Lai		Bin-Zhi Lo	
CHECK	Eric Lai		Bin-Zhi Lo	
RESPONSIBLE	Spring Liu		Bo-Yuan Shih	

SIZE = A3 VER : X01

FILE NAME PG10MG-6050A2262201-MB-A02-09-20090519-DDR3

P/N 6050A2262201

INVENTEC

TITLE *Perugia 10MG DDR3*

SIZE	CODE	DOC. NUMBER	REV
A3	CS	*1310A2303-0-MTR*	*A01*

SHEET 1 OF 69

TABLE OF CONTENTS

PAGE

1.COVER PAGE
2.INDEX
3.BLOCK DIAGRAM
4.POWER SEQUENCE BLOCK
5-12.SYSTEM POWER
13.CLOCK GENERATOR
14.PENRYN-1
15.PENRYN-2
16.PENRYN-3
17.PENRYN-4
18.FAN & THERMAL CONTROLLER
19.CANTIGA-1
20.CANTIGA-2
21.CANTIGA-3
22.CANTIGA-4
23.CANTIGA-5
24.CANTIGA-6
25.CANTIGA-7
26.DDR3 DIMM0
27.DDR3 DIMM1
28.
29.VGA-1
30.VGA-2

PAGE

31.VGA-3
32.VGA-4
33.VGA-5
34.VGA-6
35.VRAM_0
36.VRAM_1
37.3D Sensor
38.CRT CONN
39.LCM CONN
40.ICH9-1
41.ICH9-2
42.ICH9-3
43.ICH9-4
44.ICH9-5
45.SATA HDD CONN
46.ODD CONN
47.USB CONN
48.ESATA CONN
49.Camera
50.BLUE TOOTH CONN
51.KBC
52.K/B & TP/B CONN
53.Audio Codec
54.Audio AMP/MIC/Speaker

PAGE

55.LAN CONTROLLER
56.RJ45 & TRANSFORMER
57.HDMI & CEC
58.HDMI CONN
59.USB Card Reader
60.Express Card
61.WLAN /Debug
62.MDC 1.5 CONN
63.LED(M/B) & HOTKEY/B CONN
64.KILL SWITCH& HALL SENSOR
65.Screw
66.EMI
67.Hotkey board
68.Touch pad board
69.Power board

CHANGE by	Eric Lai	20-Jul-2009	

INVENTEC

TITLE Perugia 10MG DDR3

SIZE	CODE	DOC. NUMBER	REV
A3	CS	1310A2303-0-MTR	A01

SHEET 2 OF 69

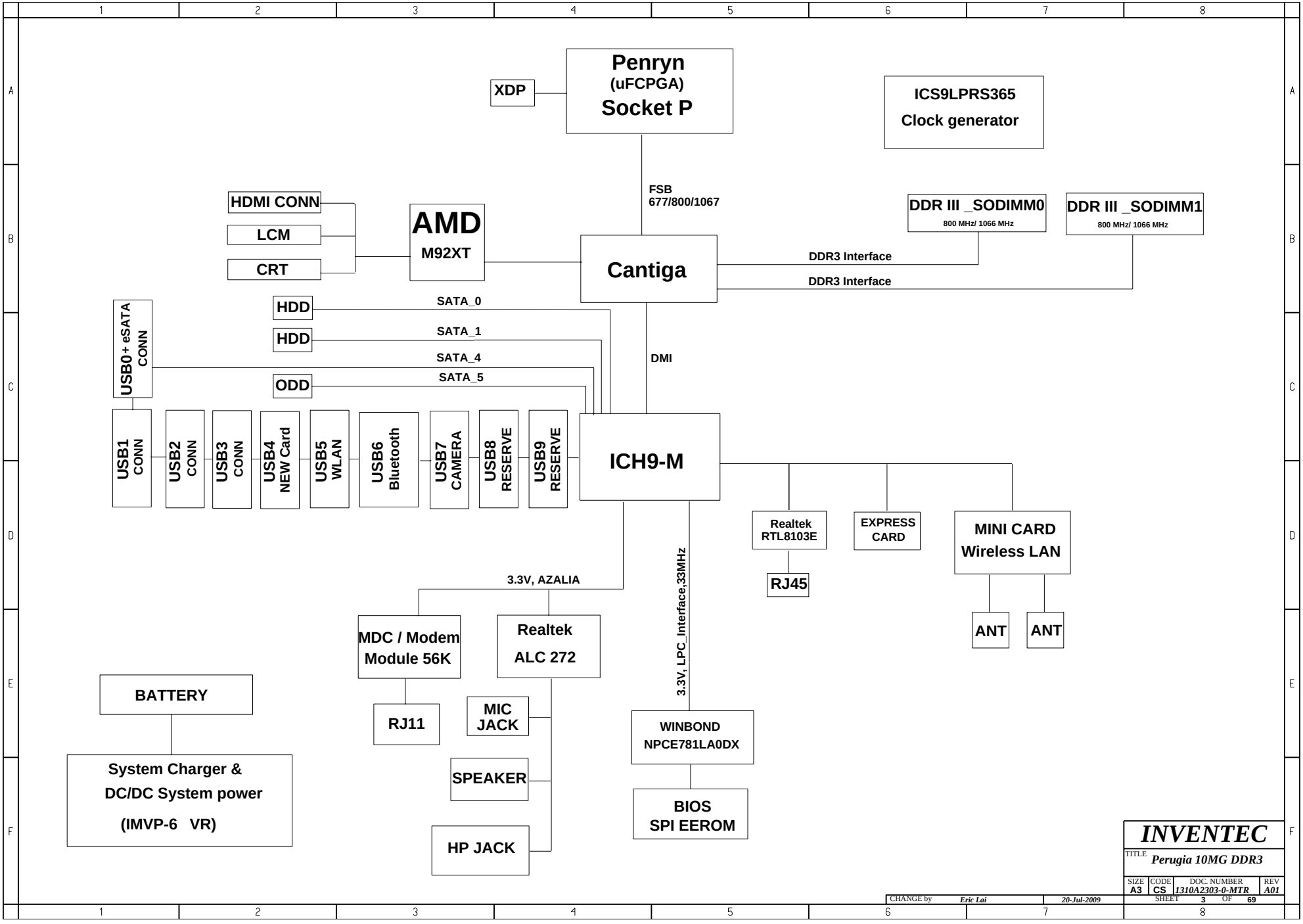

INVENTEC

TITLE Perugia 10MG DDR3

SIZE	CODE	DOC. NUMBER	REV
A3	CS	1310A2303-0-MTR	A01

SHEET 3 OF 69

CHANGE by Eric Lai 20-Jul-2009

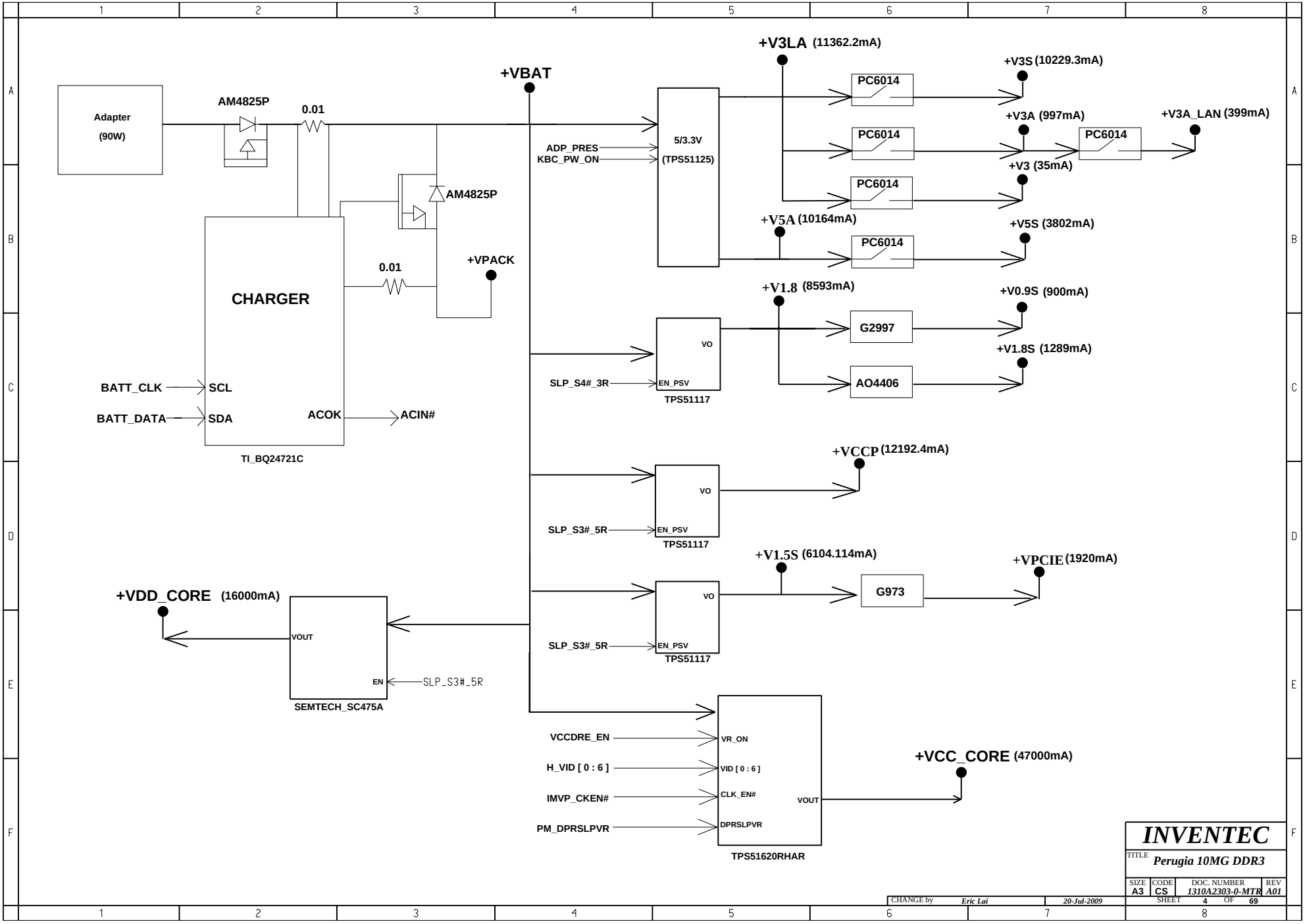

INVENTEC			
TITLE Perugia 10MG DDR3			
SIZE A3	CODE CS	DOC. NUMBER 1310A2303-0-MTR	REV A01
CHANGE by Eric Lai	20-Jul-2009	SHEET 4 OF 69	

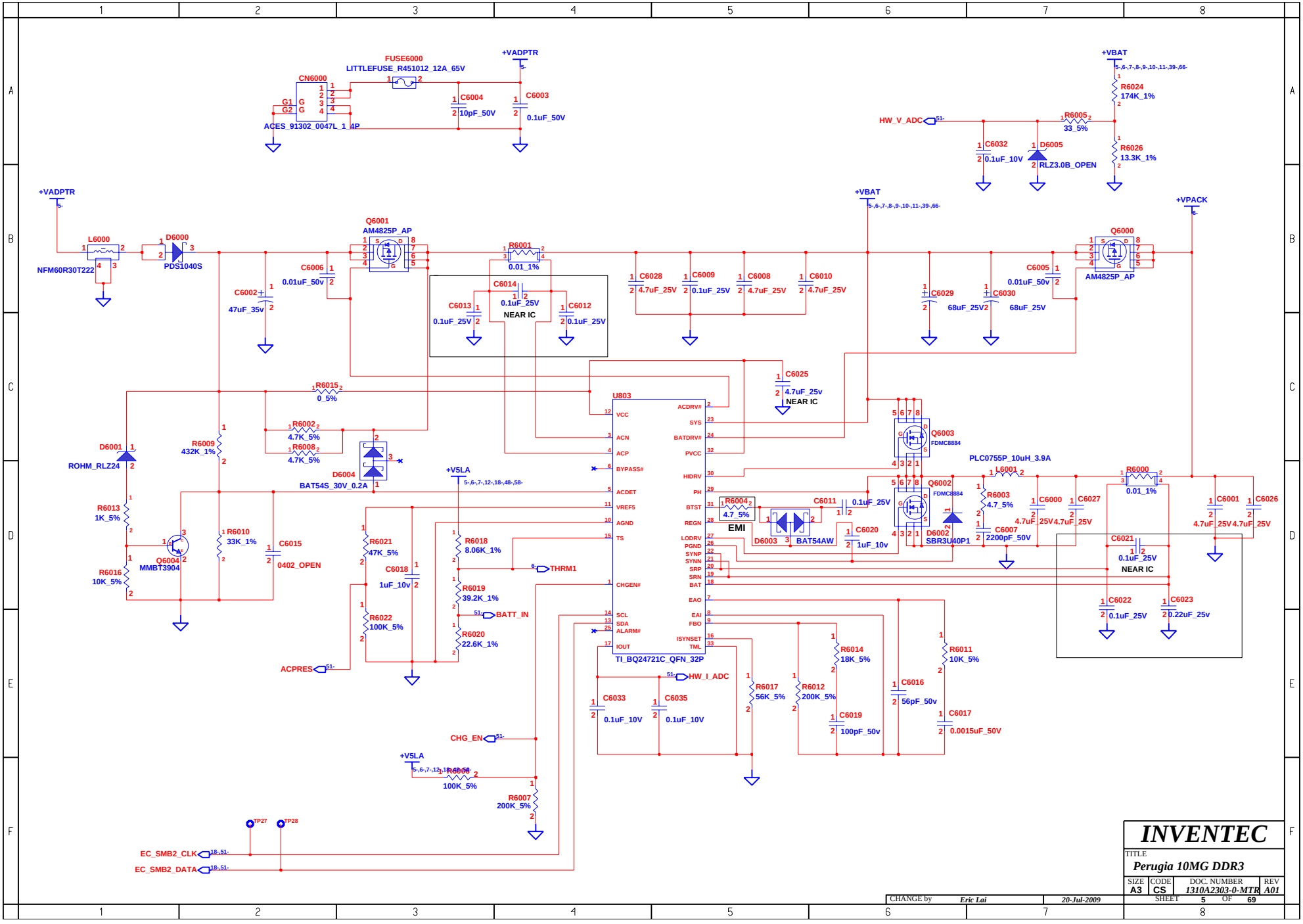
FUSE6000
LITTLEFUSE_R451012_12A_65V
CN6000
ACES_91302_0047L_1_4P
+VADPTR
C6004
10pF_50V
C6003
0.1uF_50V
+VBAT
R6024
174K_1%
HW_V_ADC
R6005
33_5%
C6032
0.1uF_10V
D6005
RLZ3.0B_OPEN
R6026
13.3K_1%
L6000
NFM60R30T222
D6000
PDS1040S
Q6001
AM4825P_AP
C6006
0.01uF_50v
C6002
47uF_35v
R6001
0.01_1%
C6014
0.1uF_25V
NEAR IC
C6013
0.1uF_25V
C6012
0.1uF_25V
C6028
4.7uF_25V
C6009
0.1uF_25V
C6008
4.7uF_25V
C6010
4.7uF_25V
C6029
68uF_25V
C6030
68uF_25V
C6005
0.01uF_50v
Q6000
AM4825P_AP
+VPACK
C6025
4.7uF_25v
NEAR IC
R6015
0_5%
U803
VCC
ACN
ACP
BYPASS#
ACDET
VREF5
AGND
TS
CHGEN#
SCL
SDA
ALARM#
IOUT
ACDRV#
SYS
BATDRV#
PVCC
HIDRV
PH
BTST
REGN
LODRV
PGND
SYNP
SYNN
SRP
SRN
BAT
EAO
EAI
FBO
ISYNSET
TML
TI_BQ24721C_QFN_32P
Q6003
FDMC8884
PLC0755P_10uH_3.9A
L6001
R6000
0.01_1%
D6001
ROHM_RLZ24
R6009
432K_1%
R6002
4.7K_5%
R6008
4.7K_5%
D6004
BAT54S_30_0.2A
+V5LA
R6004
4.7_5%
EMI
C6011
0.1uF_25V
D6003
BAT54AW
C6020
1uF_10v
Q6002
FDMC8884
D6002
SBR3U40P1
R6003
4.7_5%
C6000
4.7uF_25V
C6027
4.7uF_25V
C6007
2200pF_50V
C6001
4.7uF_25V
C6026
4.7uF_25V
C6021
0.1uF_25V
NEAR IC
C6022
0.1uF_25V
C6023
0.22uF_25v
R6013
1K_5%
R6016
10K_5%
Q6004
MMBT3904
R6010
33K_1%
C6015
0402_OPEN
R6021
47K_5%
C6018
1uF_10v
R6022
100K_5%
R6018
8.06K_1%
THRM1
R6019
39.2K_1%
BATT_IN
R6020
22.6K_1%
ACPRES
HW_I_ADC
C6033
0.1uF_10V
C6035
0.1uF_10V
R6017
56K_5%
R6012
200K_5%
R6014
18K_5%
C6019
100pF_50v
C6016
56pF_50v
R6011
10K_5%
C6017
0.0015uF_50V
CHG_EN
R6006
100K_5%
R6007
200K_5%
TP27
TP28
EC_SMB2_CLK
EC_SMB2_DATA
INVENTEC
TITLE
Perugia 10MG DDR3
SIZE A3
CODE CS
DOC. NUMBER 1310A2303-0-MTR
REV A01
SHEET 5 OF 69
CHANGE by Eric Lai
20-Jul-2009

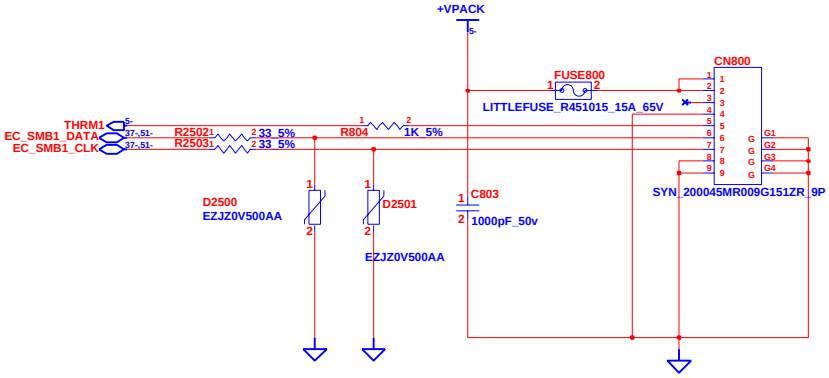

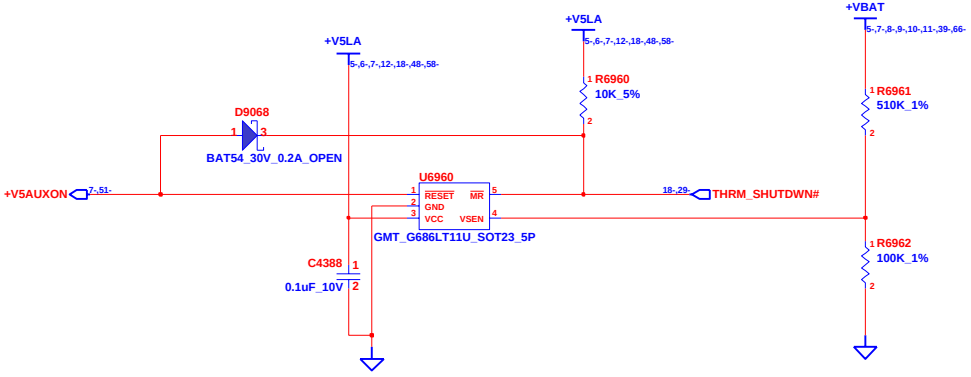

CHANGE by	Eric Lai	20-Jul-2009	

INVENTEC

TITLE

SELECT & BATTERY CONN

SIZE	CODE	DOC. NUMBER	REV
A3	CS	1310A2303-0-MTR	A01

SHEET 6 OF 69

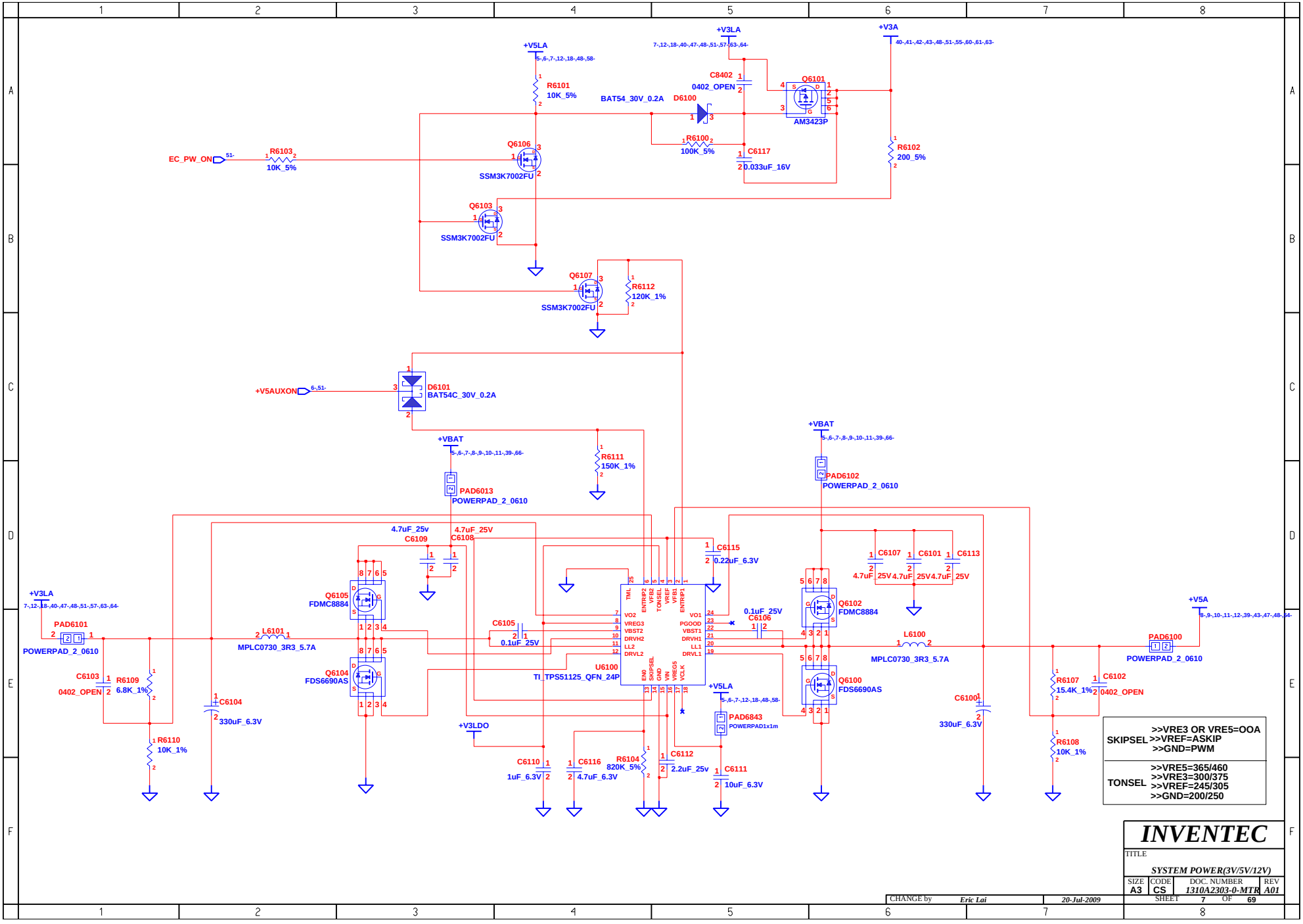
+V5LA
+V3LA
+V3A
R6101
10K_5%
C8402
0402_OPEN
Q6101
AM3423P
BAT54_30V_0.2A
D6100
R6100
100K_5%
C6117
0.033uF_16V
R6102
200_5%
EC_PW_ON
R6103
10K_5%
Q6106
SSM3K7002FU
Q6103
SSM3K7002FU
Q6107
SSM3K7002FU
R6112
120K_1%
+V5AUXON
D6101
BAT54C_30V_0.2A
+VBAT
R6111
150K_1%
PAD6013
POWERPAD_2_0610
PAD6102
POWERPAD_2_0610
4.7uF_25v
C6109
4.7uF_25V
C6108
C6115
0.22uF_6.3V
C6107
4.7uF_25V
C6101
4.7uF_25V
C6113
4.7uF_25V
Q6105
FDMC8884
Q6104
FDS6690AS
Q6102
FDMC8884
Q6100
FDS6690AS
PAD6101
POWERPAD_2_0610
L6101
MPLC0730_3R3_5.7A
C6105
0.1uF_25V
0.1uF_25V
C6106
U6100
TI_TPS51125_QFN_24P
L6100
MPLC0730_3R3_5.7A
+V5A
PAD6100
POWERPAD_2_0610
C6103
0402_OPEN
R6109
6.8K_1%
C6104
330uF_6.3V
R6110
10K_1%
+V3LDO
C6110
1uF_6.3V
C6116
4.7uF_6.3V
R6104
820K_5%
C6112
2.2uF_25v
PAD6843
POWERPAD1x1m
C6111
10uF_6.3V
C6100
330uF_6.3V
R6107
15.4K_1%
C6102
0402_OPEN
R6108
10K_1%
SKIPSEL
>>VRE3 OR VRE5=OOA
>>VREF=ASKIP
>>GND=PWM
TONSEL
>>VRE5=365/460
>>VRE3=300/375
>>VREF=245/305
>>GND=200/250
INVENTEC
TITLE
SYSTEM POWER(3V/5V/12V)
SIZE A3
CODE CS
DOC. NUMBER 1310A2303-0-MTR
REV A01
SHEET 7 OF 69
CHANGE by Eric Lai
20-Jul-2009

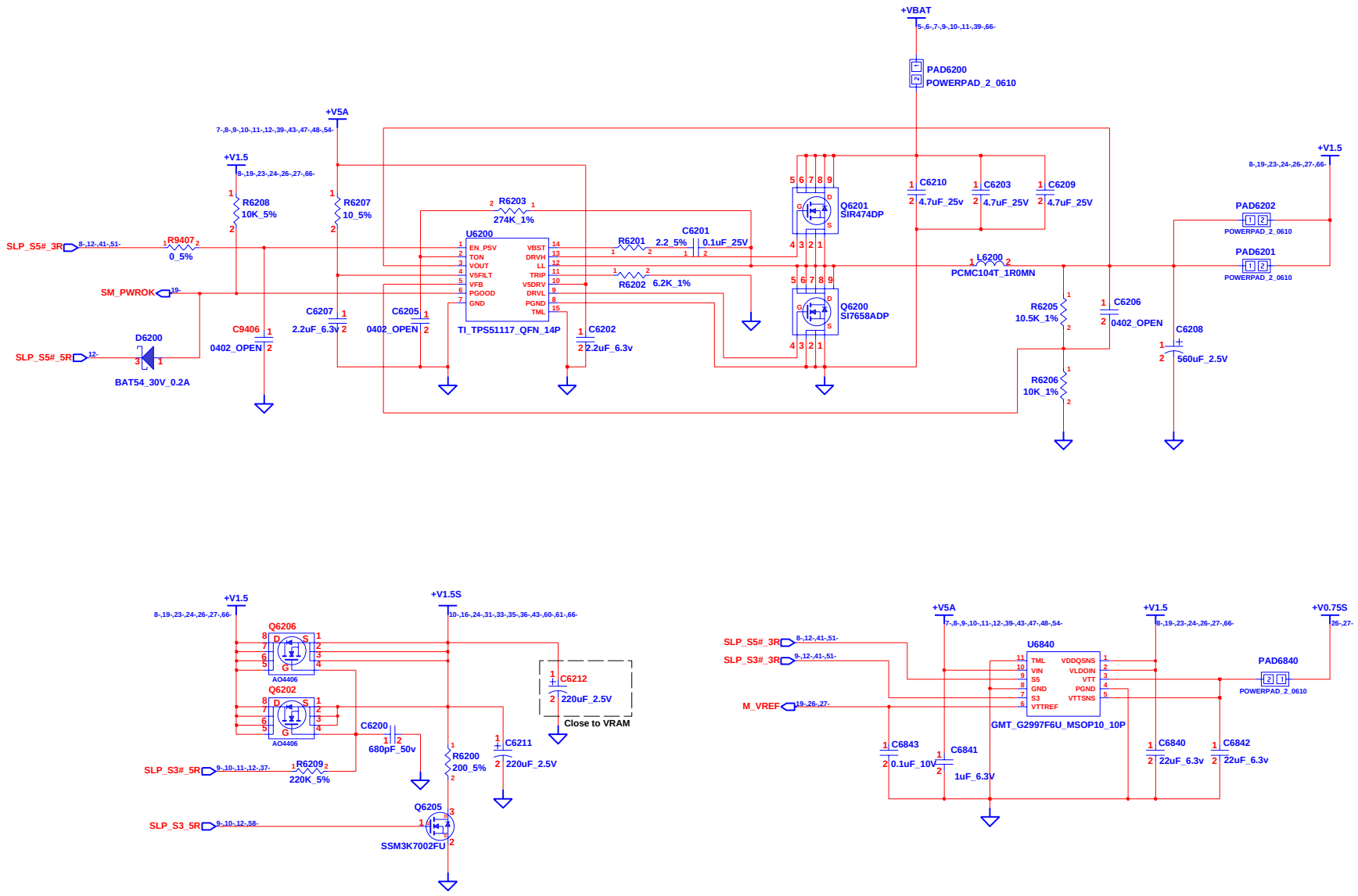

INVENTEC

TITLE
Perugia 10MG DDR3
SYSTEM POWER(+V1.5/+V0.75S)

SIZE	CODE	DOC. NUMBER	REV
A3	CS	1310A2303-0-MTR	A01

CHANGE by	Eric Lai	20-Jul-2009	SHEET 8 OF 69

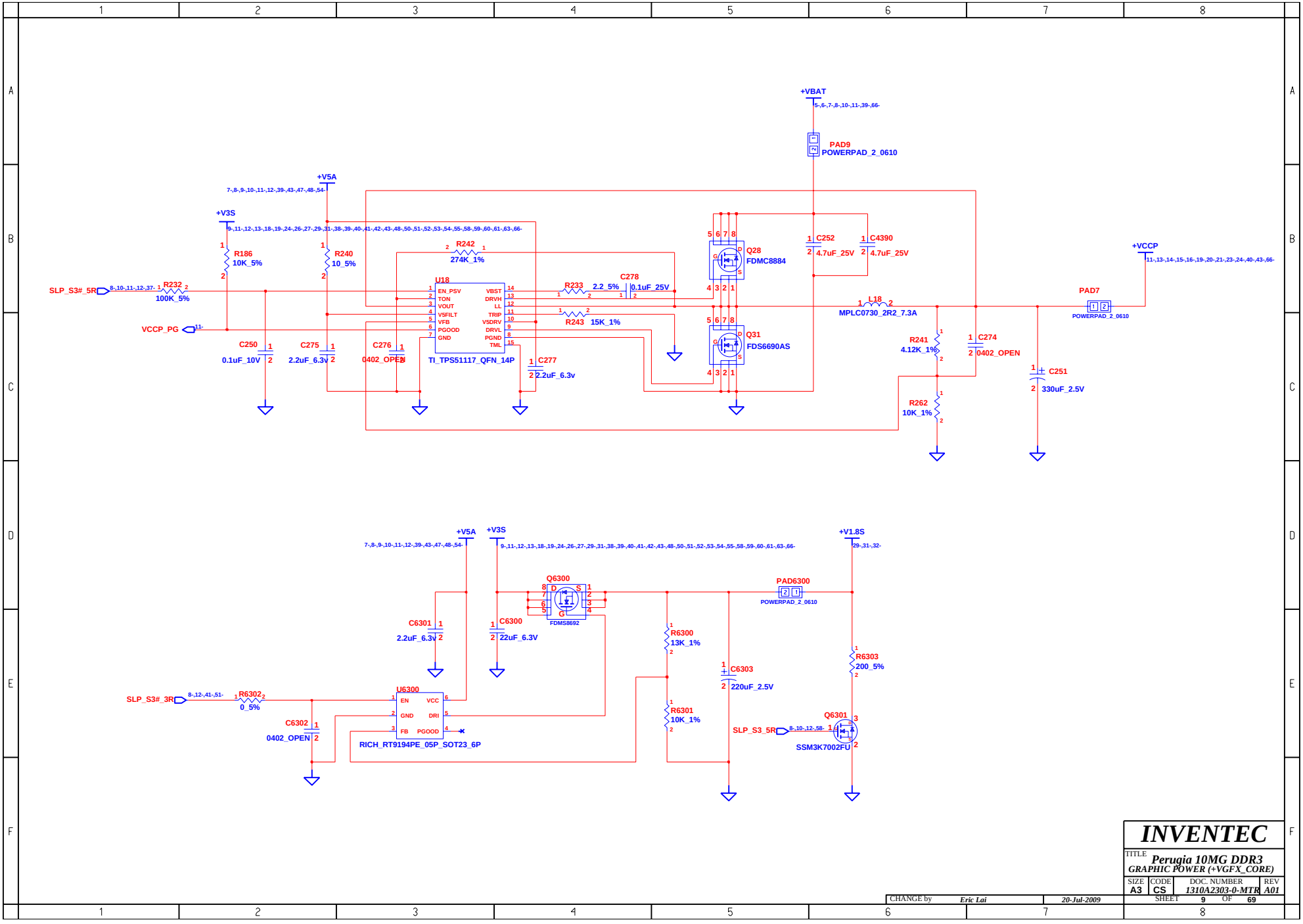

INVENTEC

TITLE
Perugia 10MG DDR3
GRAPHIC POWER (+VGFX_CORE)

SIZE	CODE	DOC. NUMBER	REV
A3	CS	1310A2303-0-MTR	A01

SHEET 9 OF 69

CHANGE by Eric Lai 20-Jul-2009

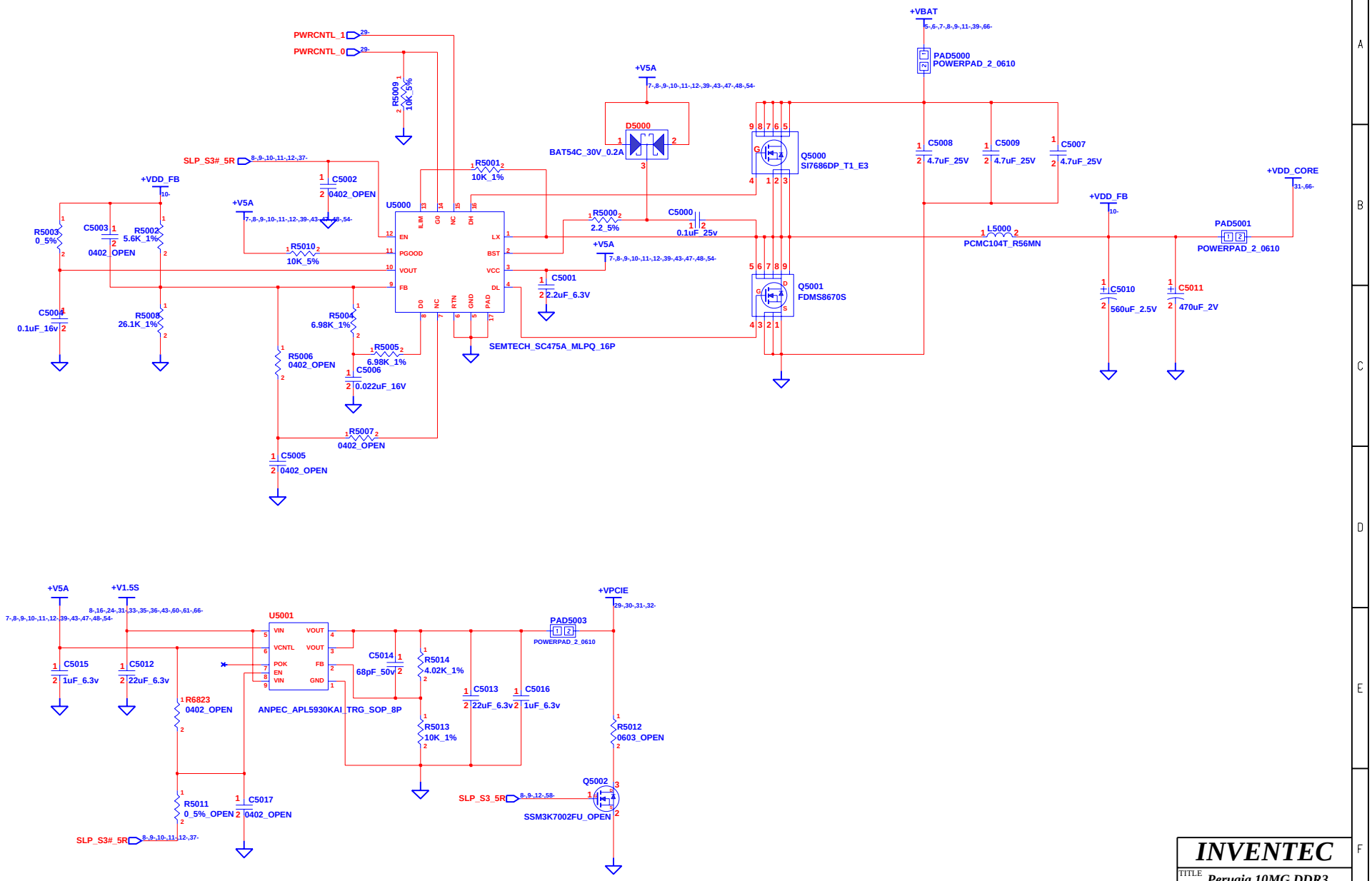

CHANGE by	Eric Lai	20-Jul-2009	

INVENTEC

TITLE: *Perugia 10MG DDR3*
SYSTEM POWER(+VCCP/+V1.5S)

SIZE	CODE	DOC. NUMBER	REV
A3	CS	1310A2303-0-MTR	A01

SHEET 10 OF 69

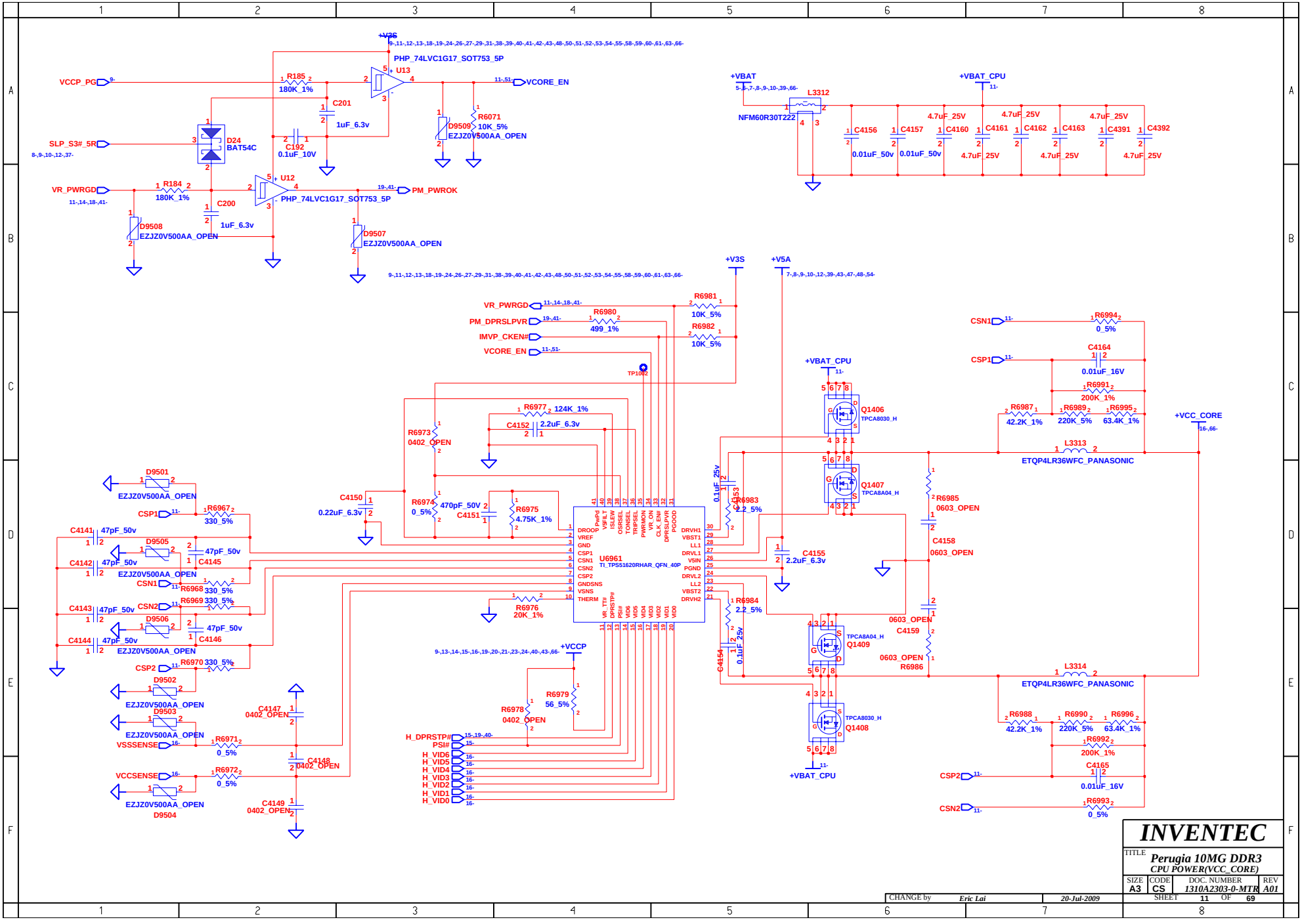

INVENTEC			
TITLE: Perugia 10MG DDR3 CPU POWER(VCC_CORE)			
SIZE: A3	CODE: CS	DOC. NUMBER: 1310A2303-0-MTR	REV: A01
CHANGE by: Eric Lai	20-Jul-2009	SHEET 11 OF 69	

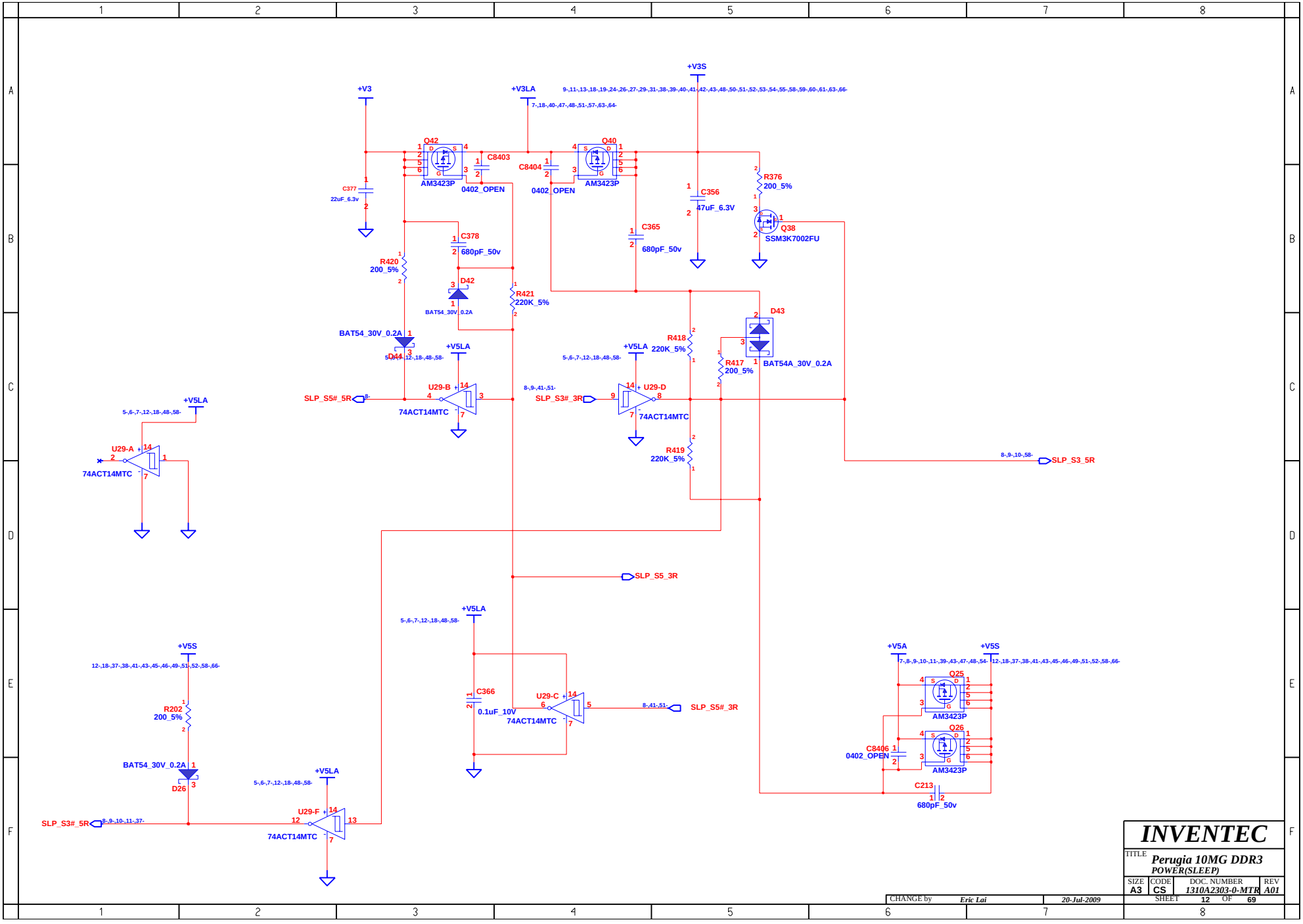

INVENTEC

TITLE *Perugia 10MG DDR3*
POWER(SLEEP)

SIZE	CODE	DOC. NUMBER	REV
A3	CS	1310A2303-0-MTR	A01

SHEET 12 OF 69

CHANGE by *Eric Lai* *20-Jul-2009*

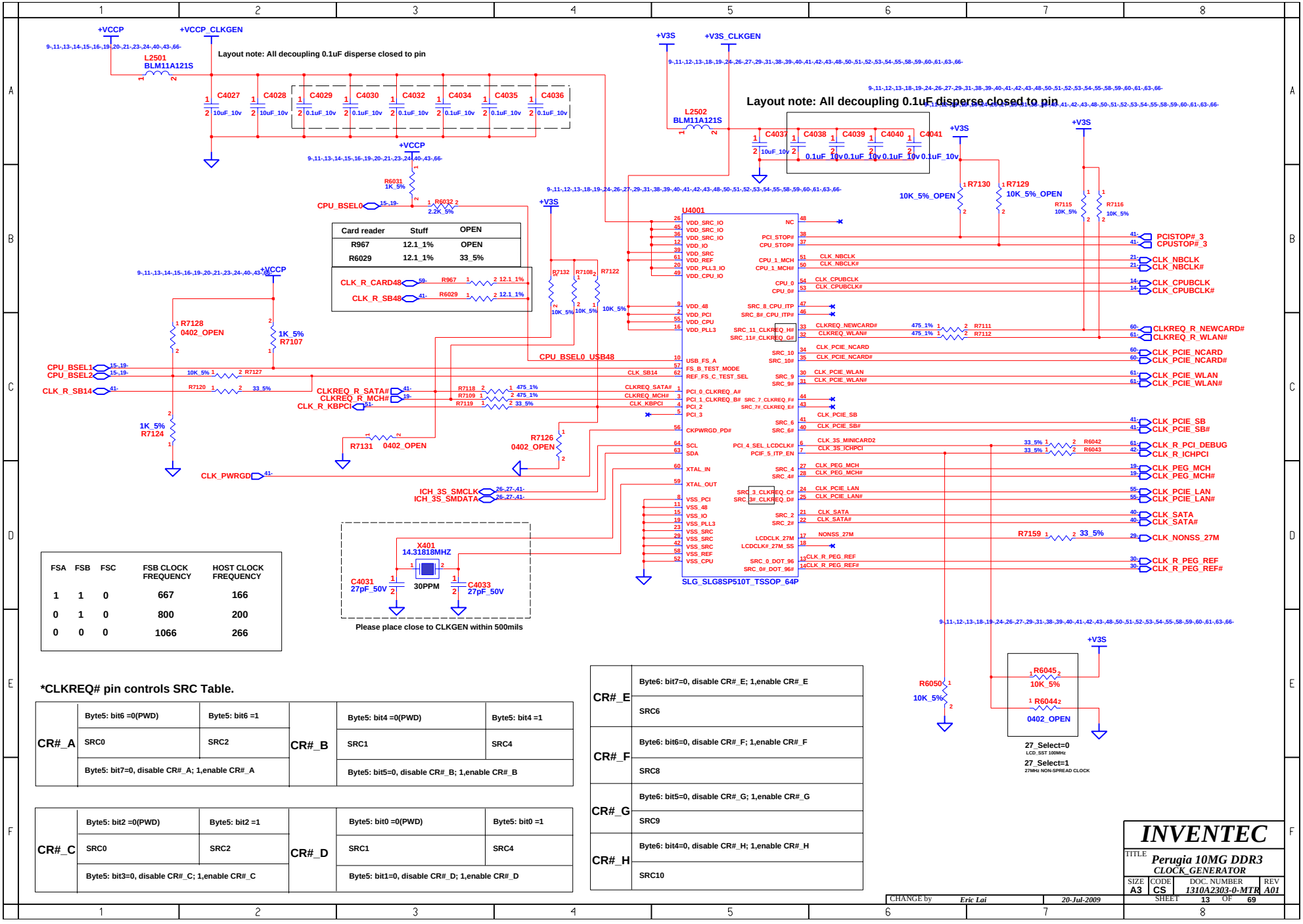

FSA	FSB	FSC	FSB CLOCK FREQUENCY	HOST CLOCK FREQUENCY
1	1	0	667	166
0	1	0	800	200
0	0	0	1066	266

***CLKREQ# pin controls SRC Table.**

CR#_A	Byte5: bit6 =0(PWD)	Byte5: bit6 =1	CR#_B	Byte5: bit4 =0(PWD)	Byte5: bit4 =1
	SRC0	SRC2		SRC1	SRC4
	Byte5: bit7=0, disable CR#_A; 1,enable CR#_A			Byte5: bit5=0, disable CR#_B; 1,enable CR#_B	

CR#_C	Byte5: bit2 =0(PWD)	Byte5: bit2 =1	CR#_D	Byte5: bit0 =0(PWD)	Byte5: bit0 =1
	SRC0	SRC2		SRC1	SRC4
	Byte5: bit3=0, disable CR#_C; 1,enable CR#_C			Byte5: bit1=0, disable CR#_D; 1,enable CR#_D	

CR#_E	Byte6: bit7=0, disable CR#_E; 1,enable CR#_E
	SRC6
CR#_F	Byte6: bit6=0, disable CR#_F; 1,enable CR#_F
	SRC8
CR#_G	Byte6: bit5=0, disable CR#_G; 1,enable CR#_G
	SRC9
CR#_H	Byte6: bit4=0, disable CR#_H; 1,enable CR#_H
	SRC10

CHANGE by	Eric Lai	20-Jul-2009

INVENTEC

TITLE: Perugia 10MG DDR3 CLOCK_GENERATOR

SIZE	CODE	DOC. NUMBER	REV
A3	CS	1310A2303-0-MTR	A01

SHEET 13 OF 69

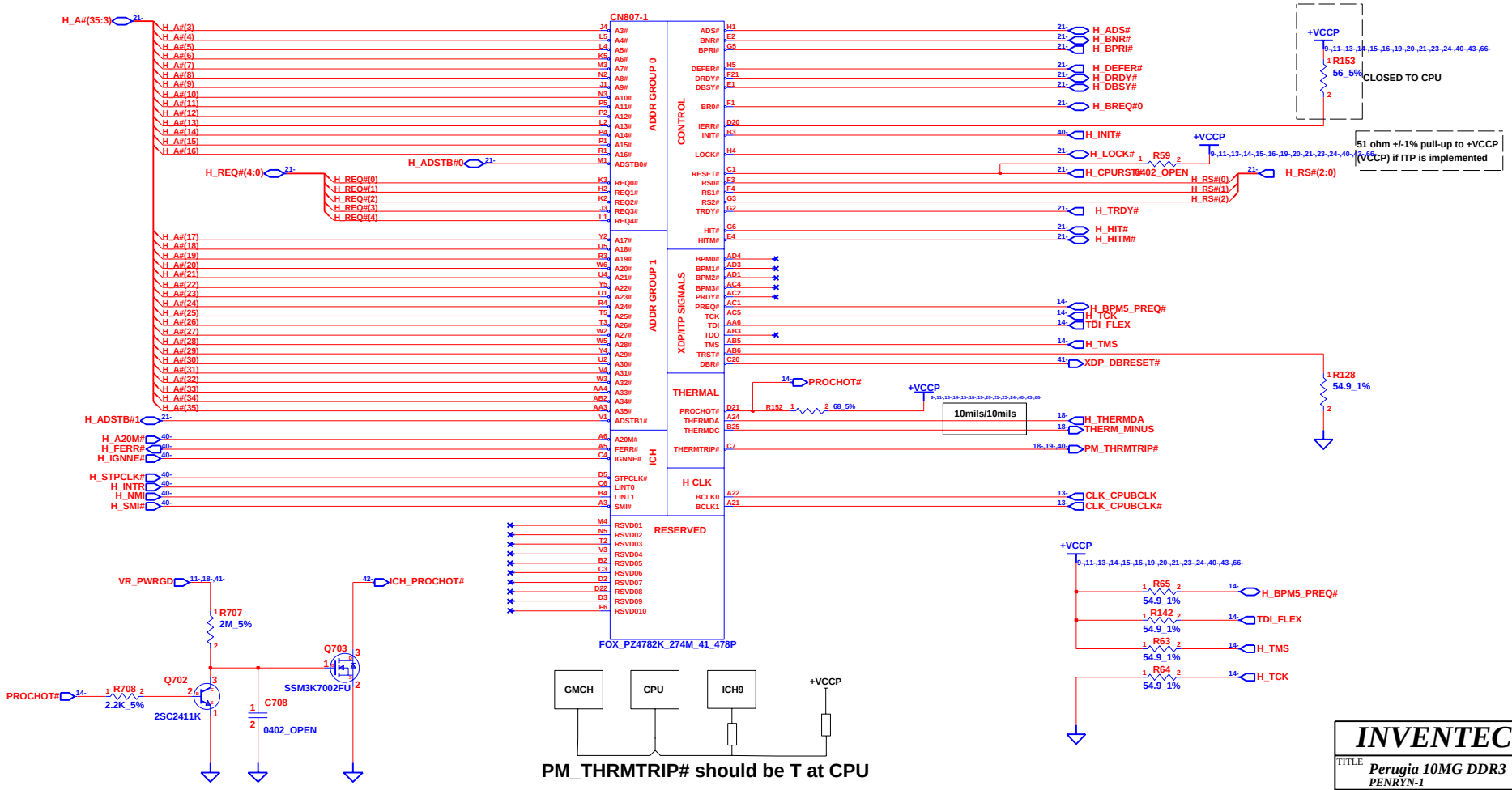

INVENTEC

TITLE: Perugia 10MG DDR3
PENRYN-1

SIZE	CODE	DOC. NUMBER	REV
A3	CS	1310A2303-0-MTR	A01

SHEET 14 OF 69

CHANGE by Eric Lai 20-Jul-2009

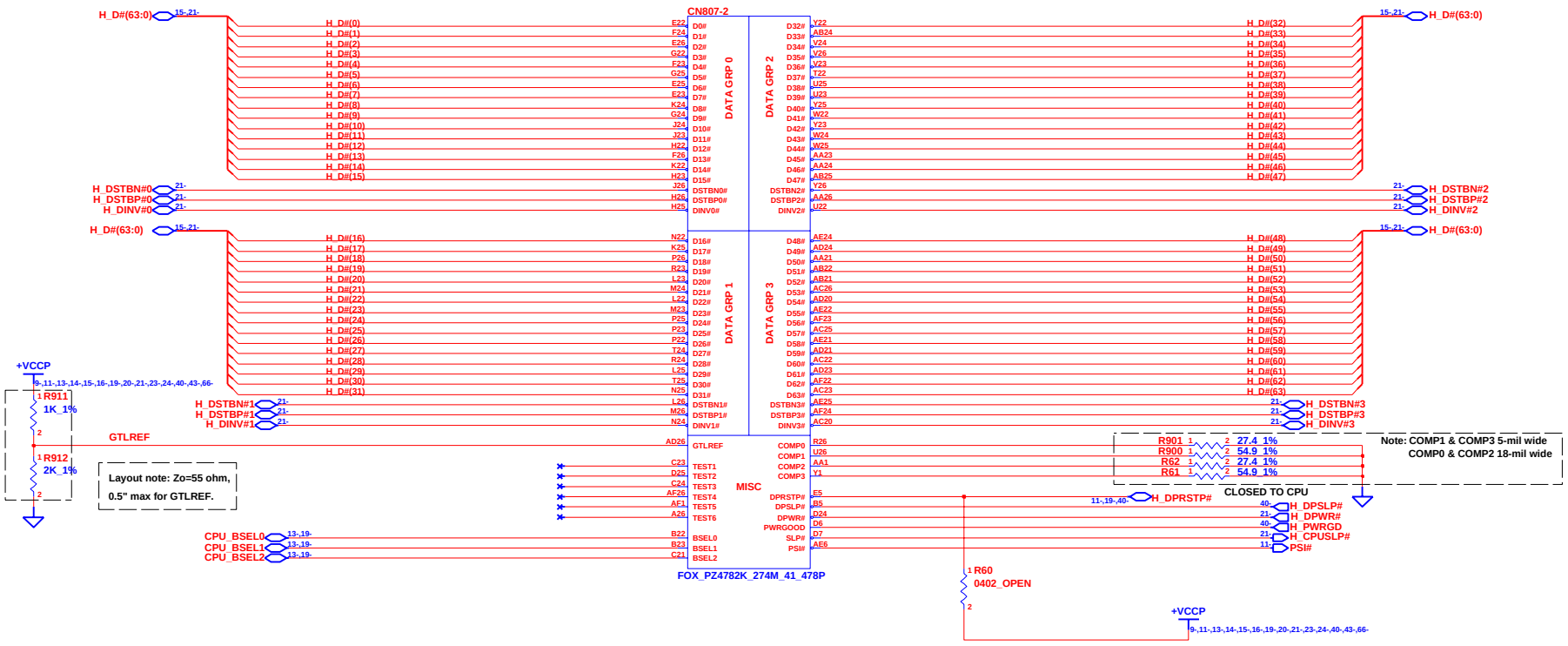

INVENTEC			
TITLE	Perugia 10MG DDR3 PENRYN-2		
SIZE A3	CODE CS	DOC. NUMBER 1310A2303-0-MTR	REV A01
CHANGE by Eric Lai	20-Jul-2009	SHEET 15 OF 69	

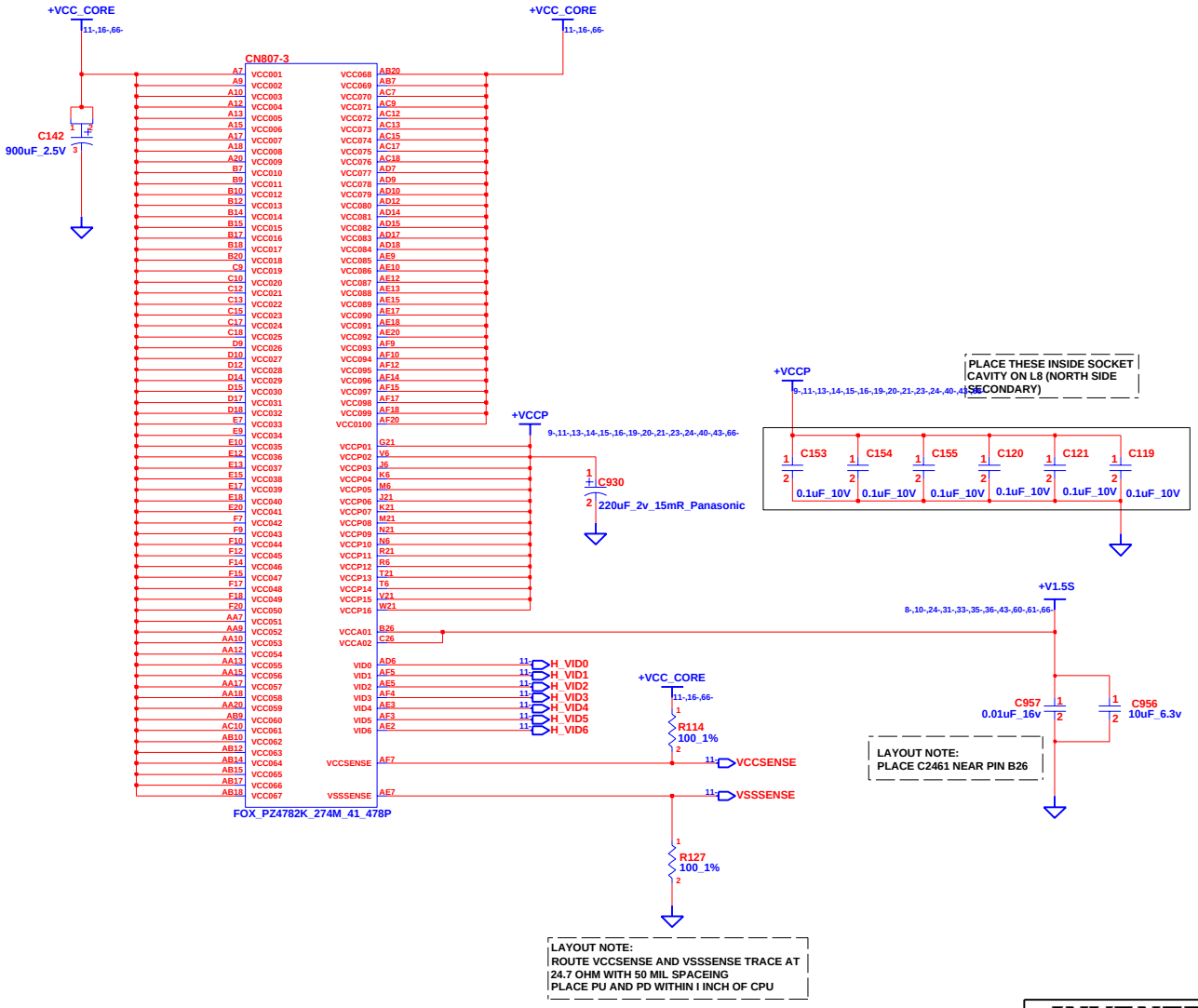

INVENTEC

TITLE *Perugia 10MG DDR3*
PENRYN-3

SIZE	CODE	DOC. NUMBER	REV
A3	CS	1310A2303-0-MTR	A01

SHEET 16 OF 69

CHANGE by *Eric Lai* *20-Jul-2009*

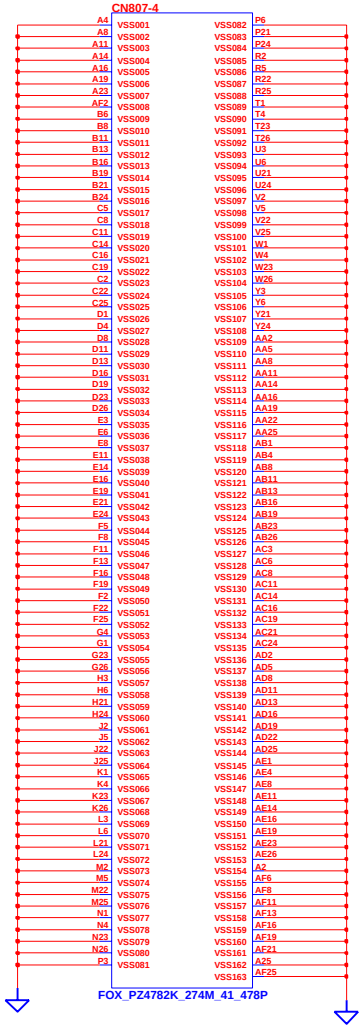

CHANGE by	Eric Lai	20-Jul-2009	

INVENTEC

TITLE *Perugia 10MG DDR3*
PENRYN-4

SIZE	CODE	DOC. NUMBER	REV
A3	CS	1310A2303-0-MTR	A01

SHEET 17 OF 69

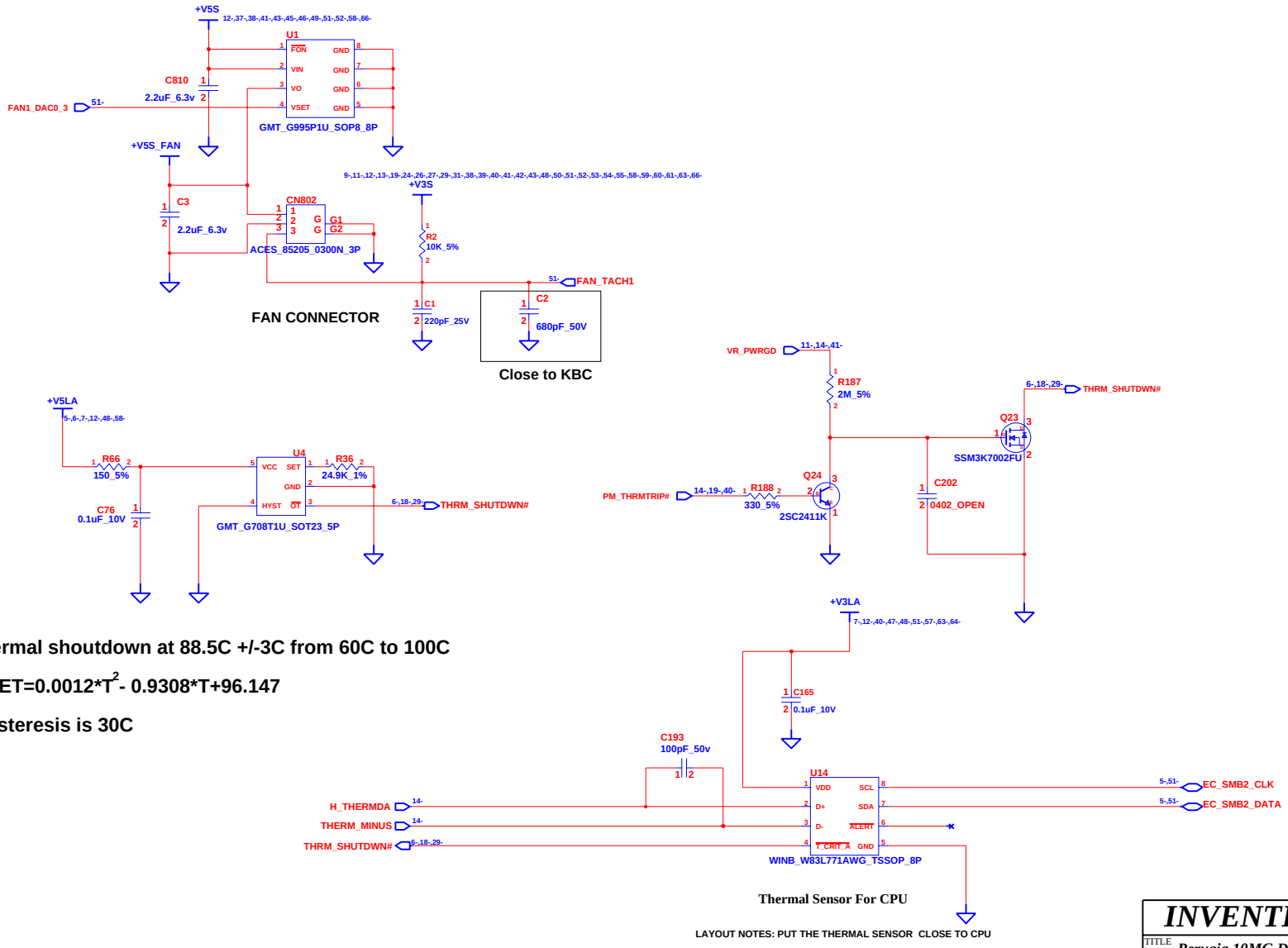

Thermal shoutdown at 88.5C +/-3C from 60C to 100C

RSET=0.0012*T^2- 0.9308*T+96.147

Hysteresis is 30C

LAYOUT NOTES: PUT THE THERMAL SENSOR CLOSE TO CPU

CHANGE by	*Eric Lai*	*20-Jul-2009*	

INVENTEC

TITLE *Perugia 10MG DDR3*
THERMAL&FAN CONTROLLER

SIZE	CODE	DOC. NUMBER	REV
A3	CS	*1310A2303-0-MTR*	*A01*

SHEET 18 OF 69

MCH_CFG(5)	LOW=DMIx2 HIGH=DMIx4

MCH_CFG(7) (CPU Strap)	LOW=RSVD HIGH=Mobile CPU

MCH_CFG(9) PCIE Graphics Lane	LOW=Reverse Lane HIGH=Normal operation

NOTE : USE 4K-OHM RESISTOR WHEN INSTALLING PULL-UP/PULL-DOWN RESISTOR ON ANY MCH-CFG CONNECTION/PINS.

MCH_CFG(13:12) XOR/ALLZ	00=PARTIAL CLOCK GATING DISABLE 01=XOR MODE ENABLE 10=ALL-Z MODE ENABLE 11=NORMAL OPERATION

MCH_CFG(16) (FSB Dynamic ODT)	LOW=Dynamic ODT Disable HIGH=Dynamic ODT Enable

MCH_CFG(6)	LOW=TPM Enable HIGH=TPM Disable

NOTE: CFG[2:0] STRP : 010b : 800 MT/S
011b : 667 MT/S

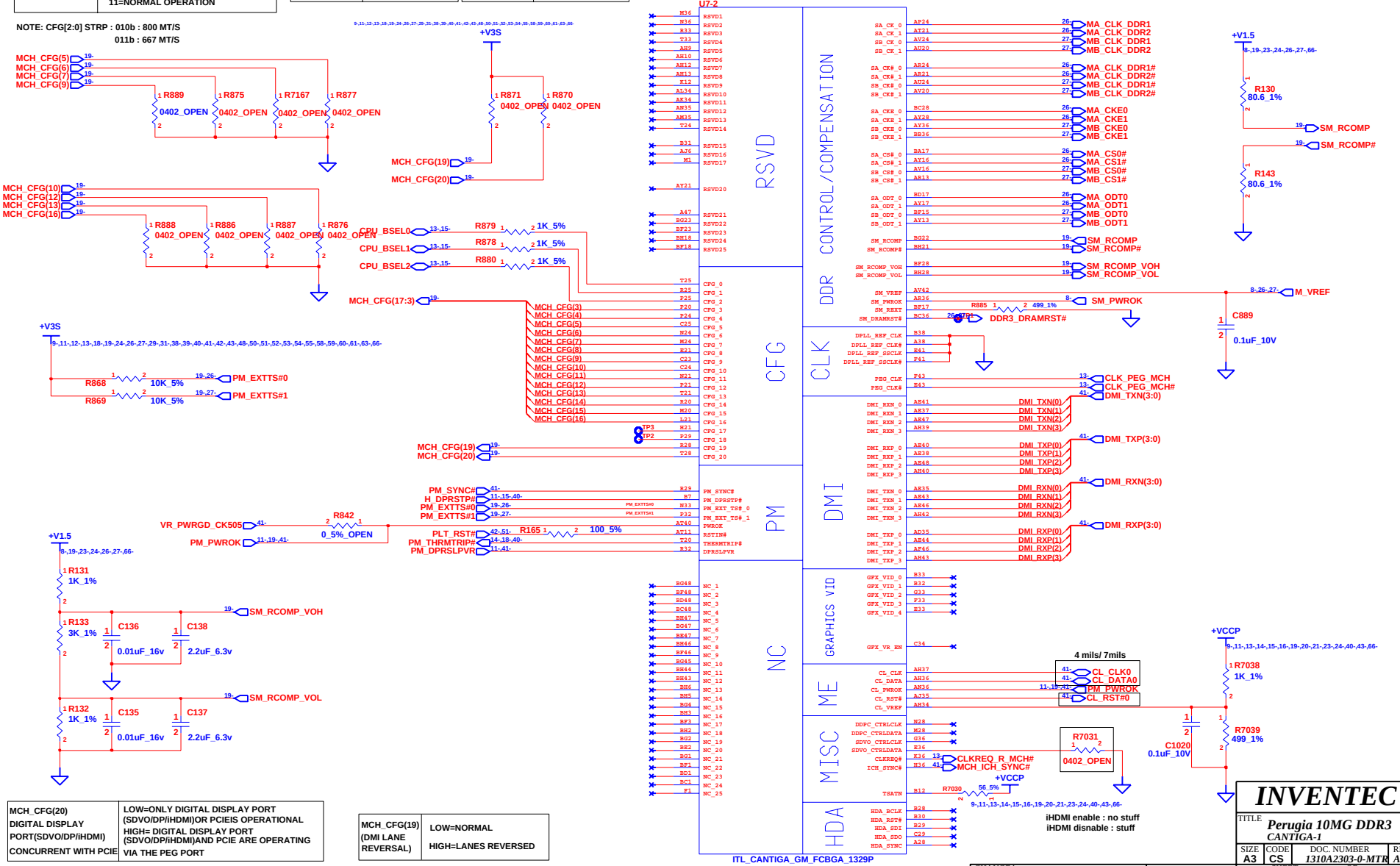

MCH_CFG(20) DIGITAL DISPLAY PORT(SDVO/DP/iHDMI) CONCURRENT WITH PCIE	LOW=ONLY DIGITAL DISPLAY PORT (SDVO/DP/iHDMI)OR PCIEIS OPERATIONAL HIGH= DIGITAL DISPLAY PORT (SDVO/DP/iHDMI)AND PCIE ARE OPERATING VIA THE PEG PORT

MCH_CFG(19) (DMI LANE REVERSAL)	LOW=NORMAL HIGH=LANES REVERSED

CHANGE by	Eric Lai	20-Jul-2009

INVENTEC

TITLE: *Perugia 10MG DDR3*
CANTIGA-1

SIZE	CODE	DOC. NUMBER	REV
A3	CS	1310A2303-0-MTR	A01

SHEET 19 OF 69

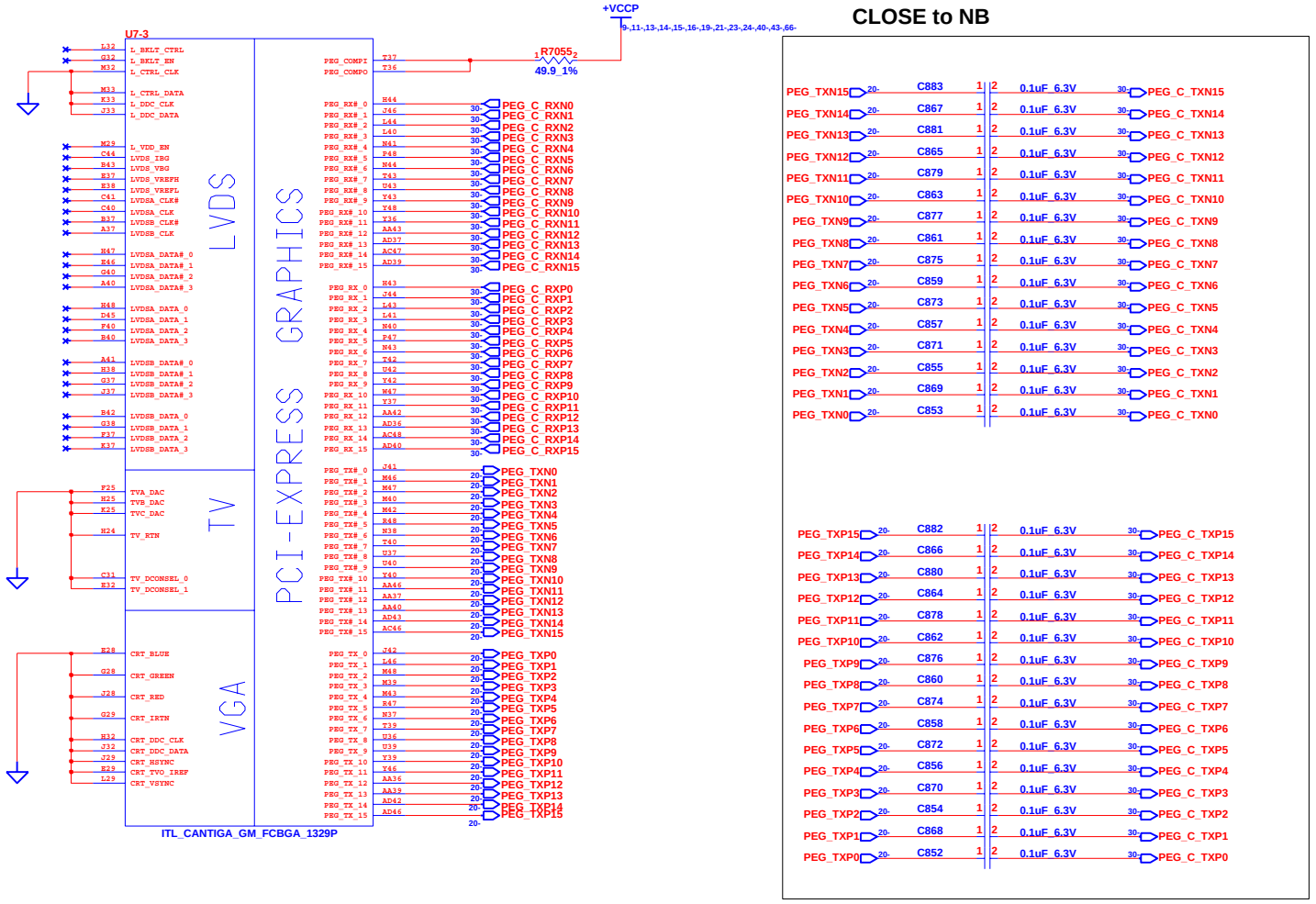

CHANGE by	Eric Lai	20-Jul-2009	

INVENTEC

TITLE: *Perugia 10MG DDR3*
CANTIGA-2

SIZE	CODE	DOC. NUMBER	REV
A3	CS	1310A2303-0-MTR	A01

SHEET 20 OF 69

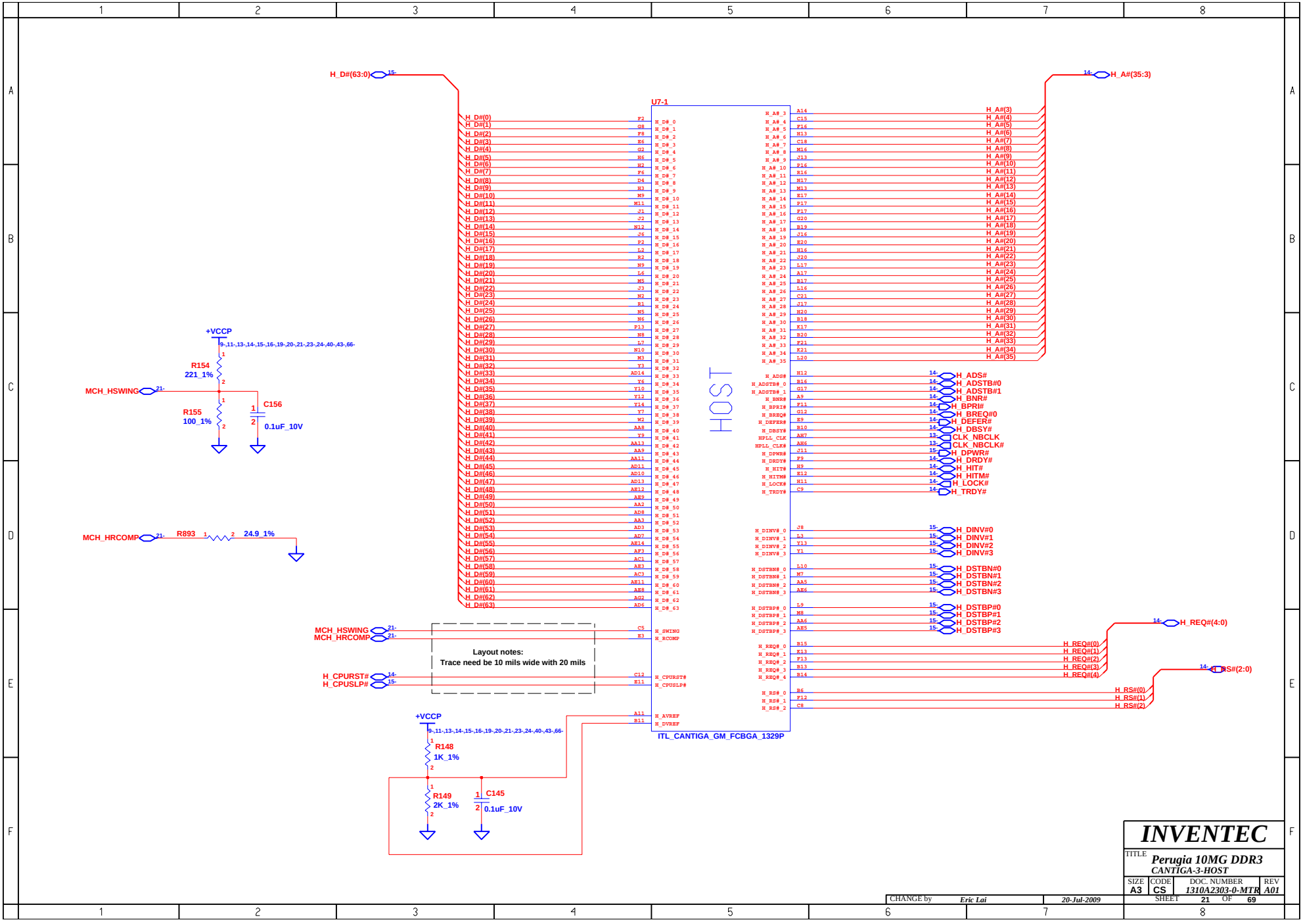
U7-1
HOST
ITL_CANTIGA_GM_FCBGA_1329P
H_D#(63:0)
H_A#(35:3)
H_ADS#
H_ADSTB#0
H_ADSTB#1
H_BNR#
H_BPRI#
H_BREQ#0
H_DEFER#
H_DBSY#
CLK_NBCLK
CLK_NBCLK#
H_DPWR#
H_DRDY#
H_HIT#
H_HITM#
H_LOCK#
H_TRDY#
H_DINV#0
H_DINV#1
H_DINV#2
H_DINV#3
H_DSTBN#0
H_DSTBN#1
H_DSTBN#2
H_DSTBN#3
H_DSTBP#0
H_DSTBP#1
H_DSTBP#2
H_DSTBP#3
H_REQ#(4:0)
H_REQ#(0)
H_REQ#(1)
H_REQ#(2)
H_REQ#(3)
H_REQ#(4)
H_RS#(2:0)
H_RS#(0)
H_RS#(1)
H_RS#(2)
MCH_HSWING
MCH_HRCOMP
H_CPURST#
H_CPUSLP#
H_SWING
H_RCOMP
H_AVREF
H_DVREF
Layout notes:
Trace need be 10 mils wide with 20 mils
+VCCP
R154
221_1%
R155
100_1%
C156
0.1uF_10V
R893
24.9_1%
R148
1K_1%
R149
2K_1%
C145
0.1uF_10V
INVENTEC
TITLE
Perugia 10MG DDR3
CANTIGA-3-HOST
SIZE A3
CODE CS
DOC. NUMBER 1310A2303-0-MTR
REV A01
SHEET 21 OF 69
CHANGE by Eric Lai
20-Jul-2009

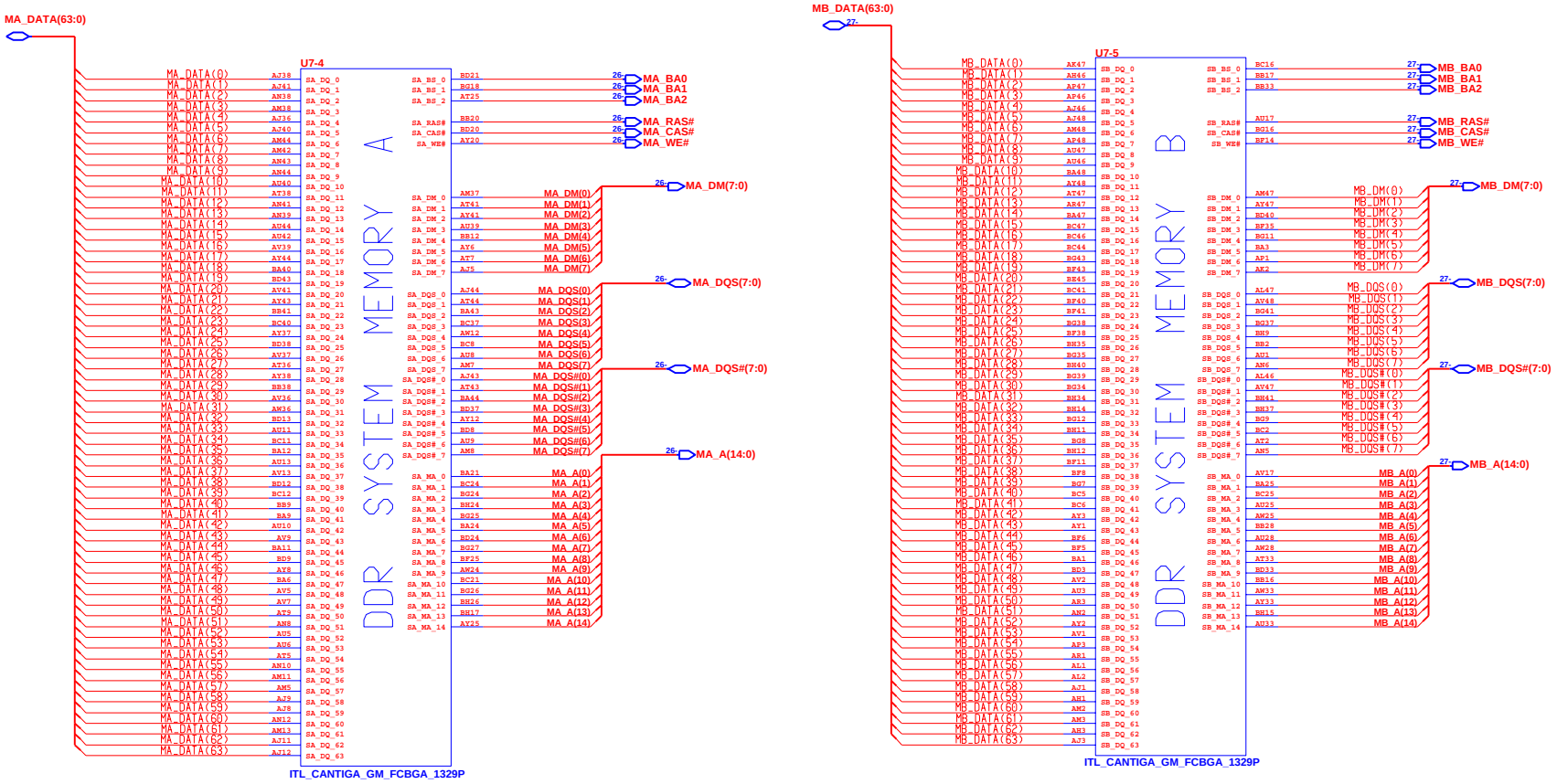

INVENTEC

TITLE **Perugia 10MG DDR3**
CANTIGA-4-DDR2

SIZE	CODE	DOC. NUMBER	REV
A3	CS	1310A2303-0-MTR	A01

SHEET 22 OF 69

CHANGE by *Eric Lai* *20-Jul-2009*

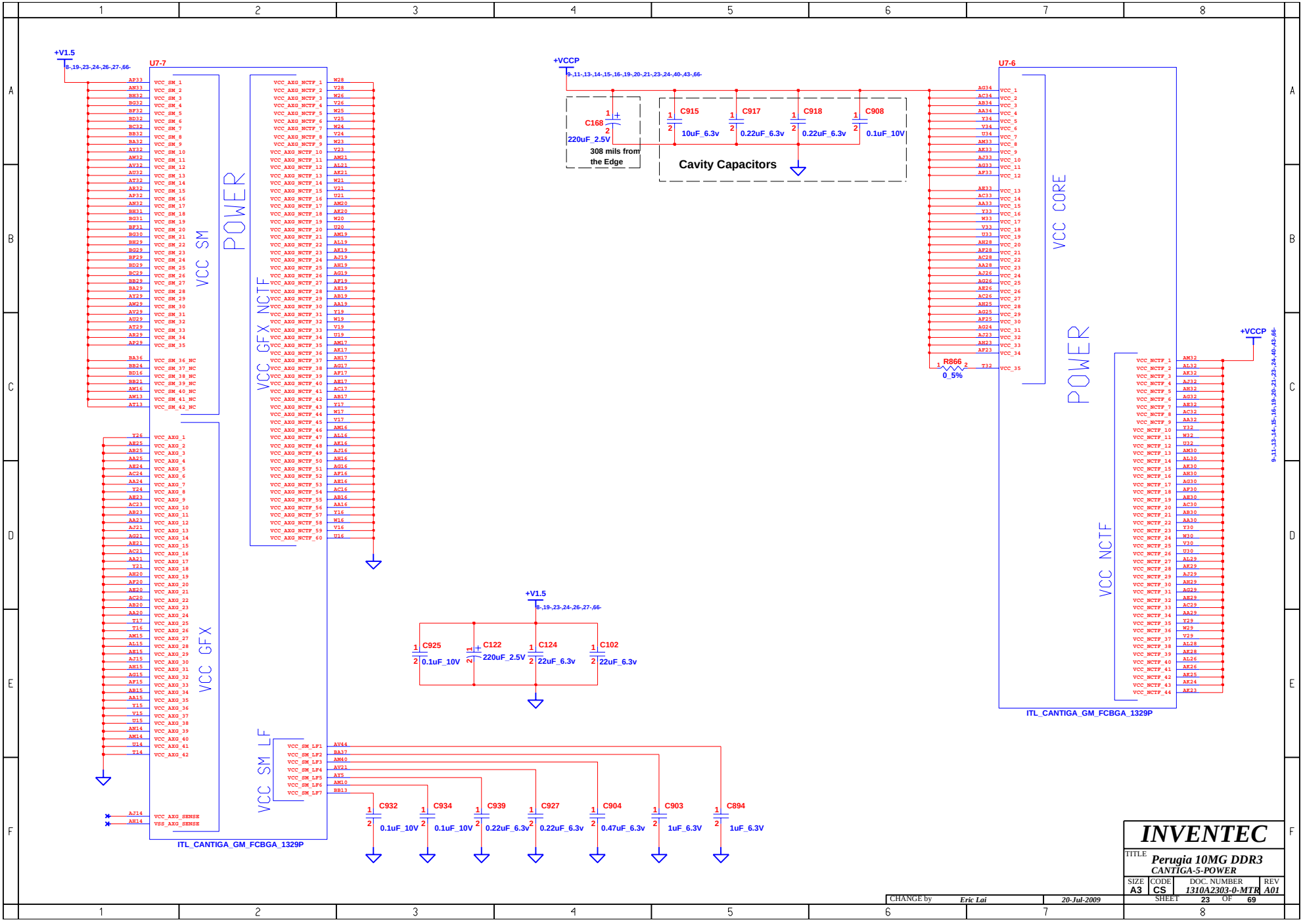
+V1.5
8,-19,-23,-24,-26,-27,-66-
U7-7
VCC SM
POWER
VCC GFX NCTF
VCC GFX
VCC SM LF
ITL_CANTIGA_GM_FCBGA_1329P
+VCCP
9,-11,-13,-14,-15,-16,-19,-20,-21,-23,-24,-40,-43,-66-
C168
220uF_2.5V
308 mils from the Edge
C915
10uF_6.3v
C917
0.22uF_6.3v
C918
0.22uF_6.3v
C908
0.1uF_10V
Cavity Capacitors
U7-6
VCC CORE
R866
0_5%
VCC NCTF
ITL_CANTIGA_GM_FCBGA_1329P
C925
0.1uF_10V
C122
220uF_2.5V
C124
22uF_6.3v
C102
22uF_6.3v
C932
0.1uF_10V
C934
0.1uF_10V
C939
0.22uF_6.3v
C927
0.22uF_6.3v
C904
0.47uF_6.3v
C903
1uF_6.3V
C894
1uF_6.3V
INVENTEC
TITLE
Perugia 10MG DDR3
CANTIGA-5-POWER
SIZE A3
CODE CS
DOC. NUMBER 1310A2303-0-MTR
REV A01
SHEET 23 OF 69
CHANGE by Eric Lai
20-Jul-2009

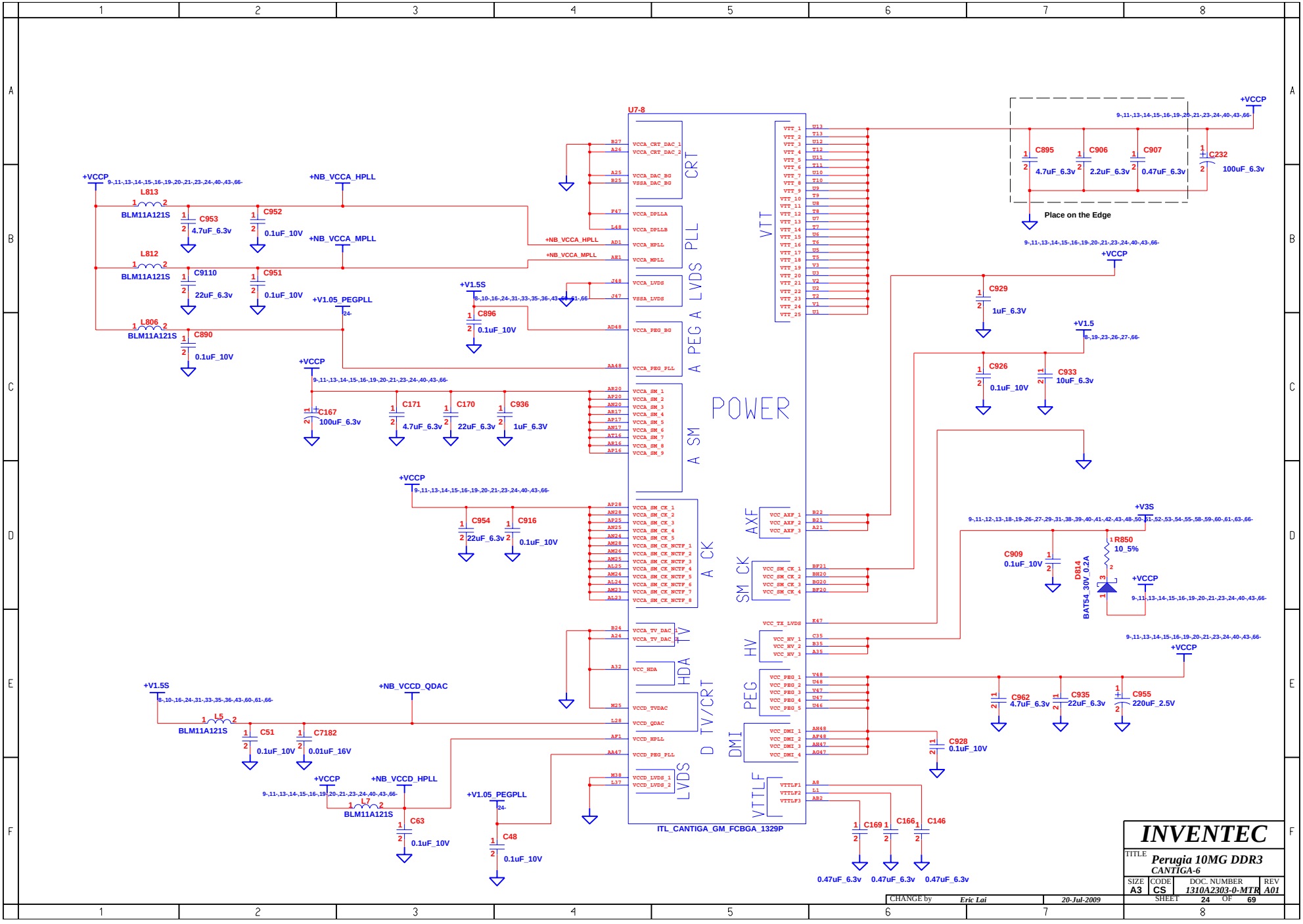

INVENTEC			
TITLE	Perugia 10MG DDR3 CANTIGA-6		
SIZE A3	CODE CS	DOC. NUMBER 1310A2303-0-MTR	REV A01
CHANGE by Eric Lai	20-Jul-2009	SHEET 24 OF 69	

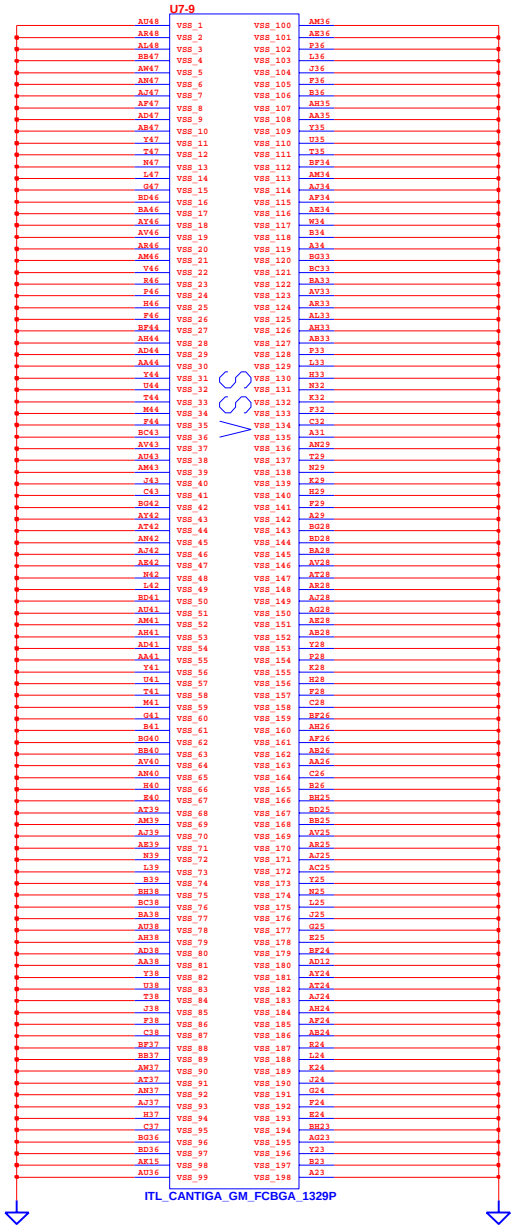

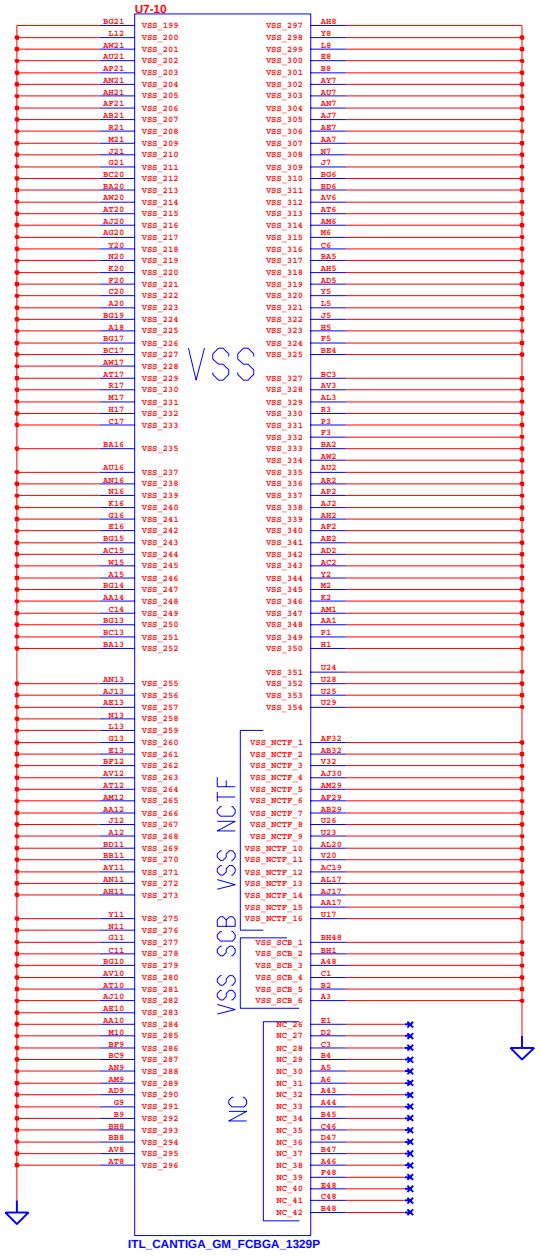

CHANGE by	Eric Lai	20-Jul-2009	

INVENTEC

TITLE *Perugia 10MG DDR3*
CANTIGA-7

SIZE	CODE	DOC. NUMBER	REV
A3	CS	1310A2303-0-MTR	A01

SHEET 25 OF 69

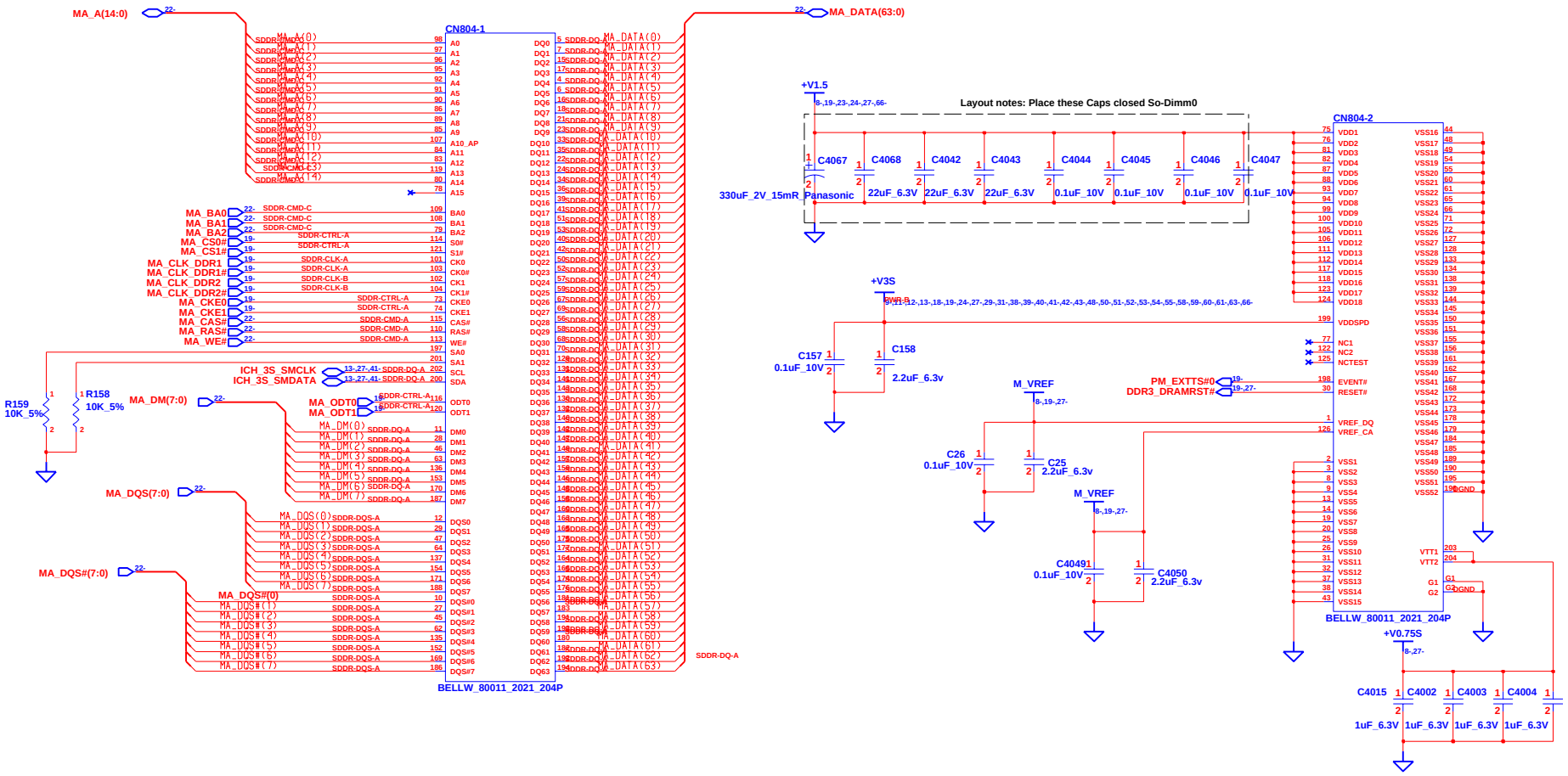

SO DIMM0

SLOT A

INVENTEC			
TITLE: Perugia 10MG DDR3 DDR3-DIMM-0			
SIZE: A3	CODE: CS	DOC. NUMBER: 1310A2303-0-MTR	REV: A01
CHANGE by: Eric Lai	20-Jul-2009	SHEET 26 OF 69	

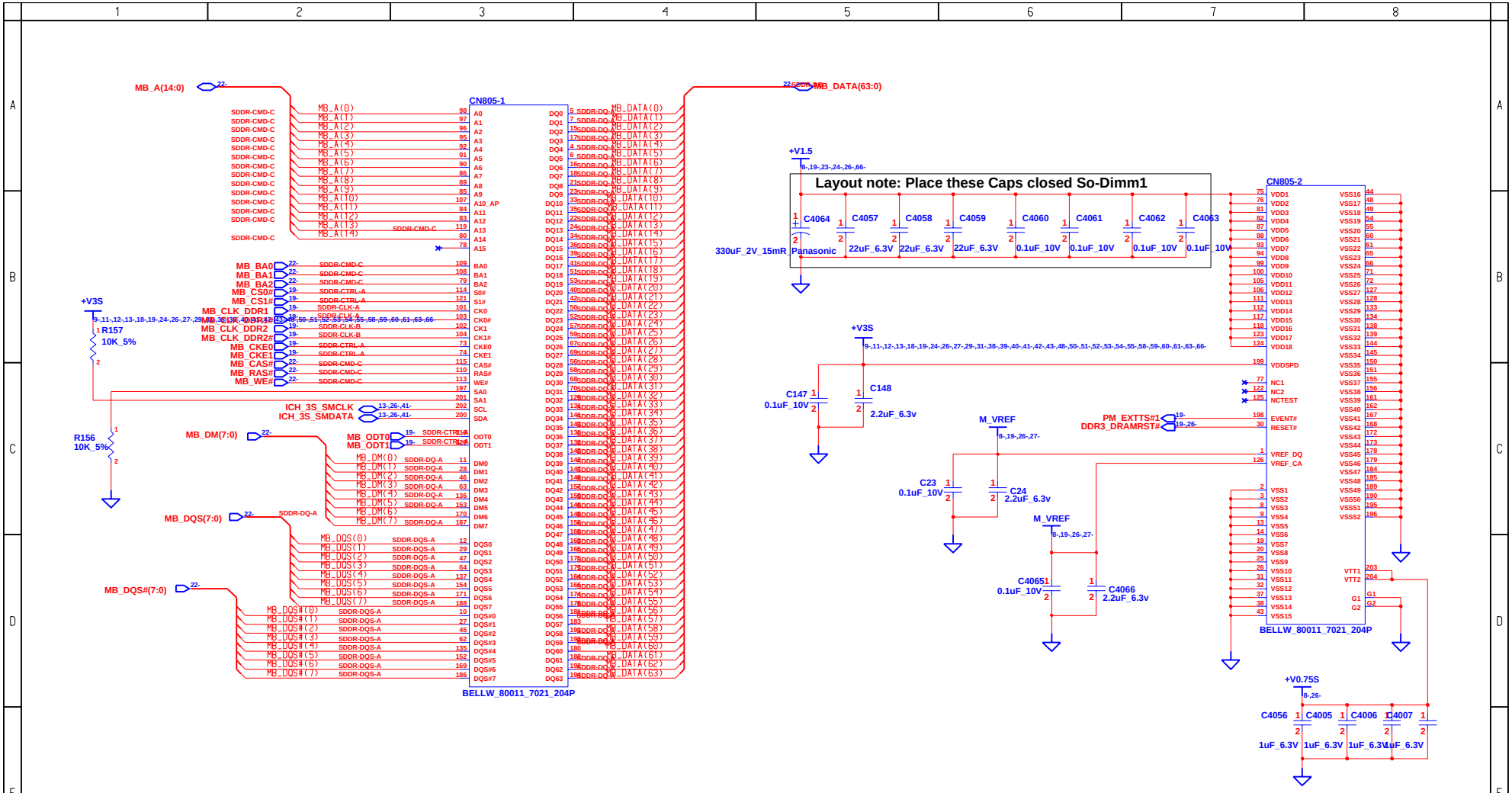

SO DIMM1

SLOT B

INVENTEC			
TITLE: Perugia 10MG DDR3 DDR3-DIMM-1			
SIZE: A3	CODE: CS	DOC. NUMBER: 1310A2303-0-MTR	REV: A01
CHANGE by: Eric Lai	20-Jul-2009	SHEET 27 OF 69	

1	2	3	4	5	6	7	8

A B C D E F

CHANGE by *Eric Lai* 27-Sep-2003

INVENTEC

TITLE ***Perugia 10MG DDR3***
DDR2-DAMPING

SIZE	CODE	DOC. NUMBER	REV
A3	CS	*1310A2303-0-MTR*	*A01*

SHEET 28 OF 69

M92 XT P/N = 6019B0591602

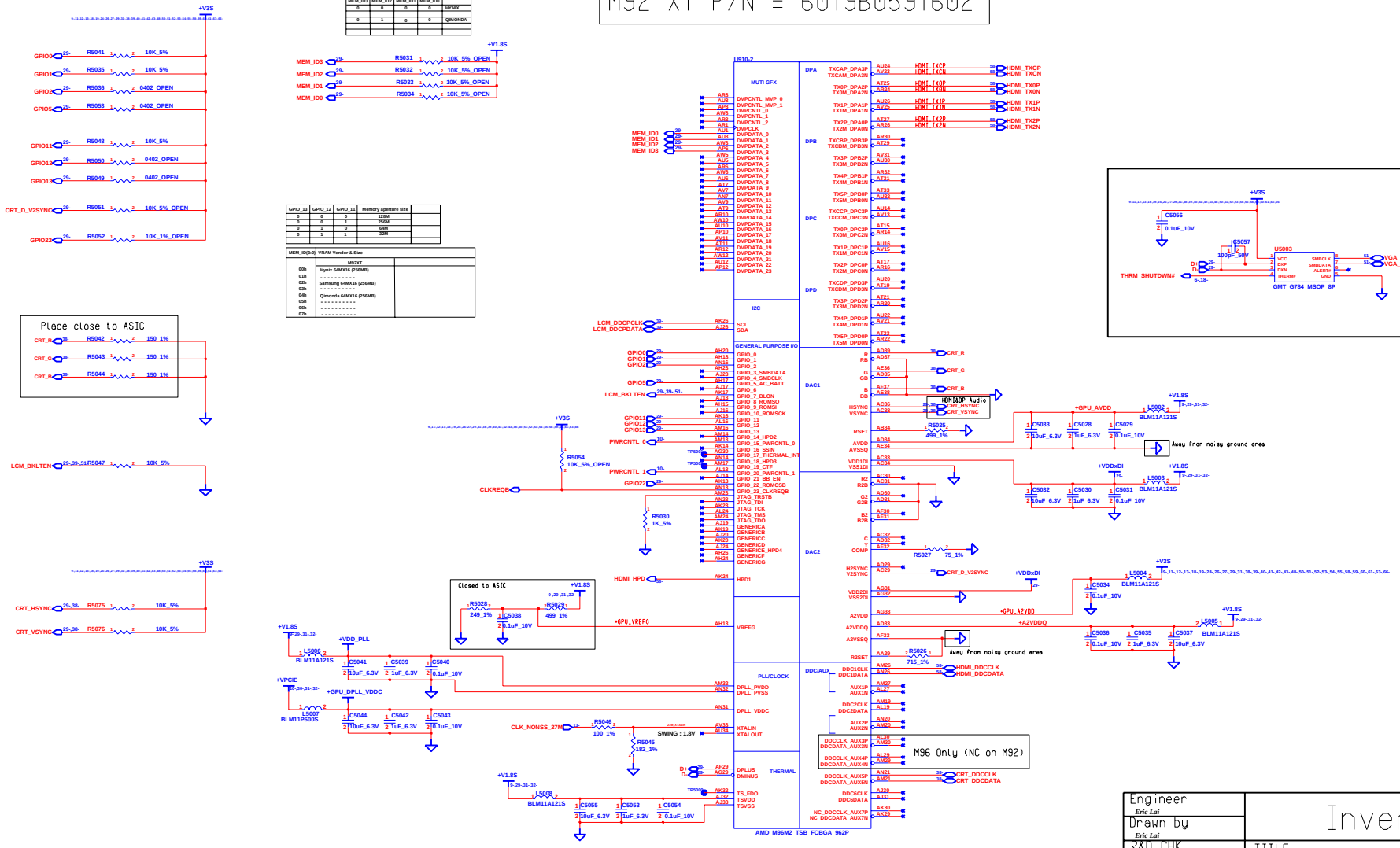

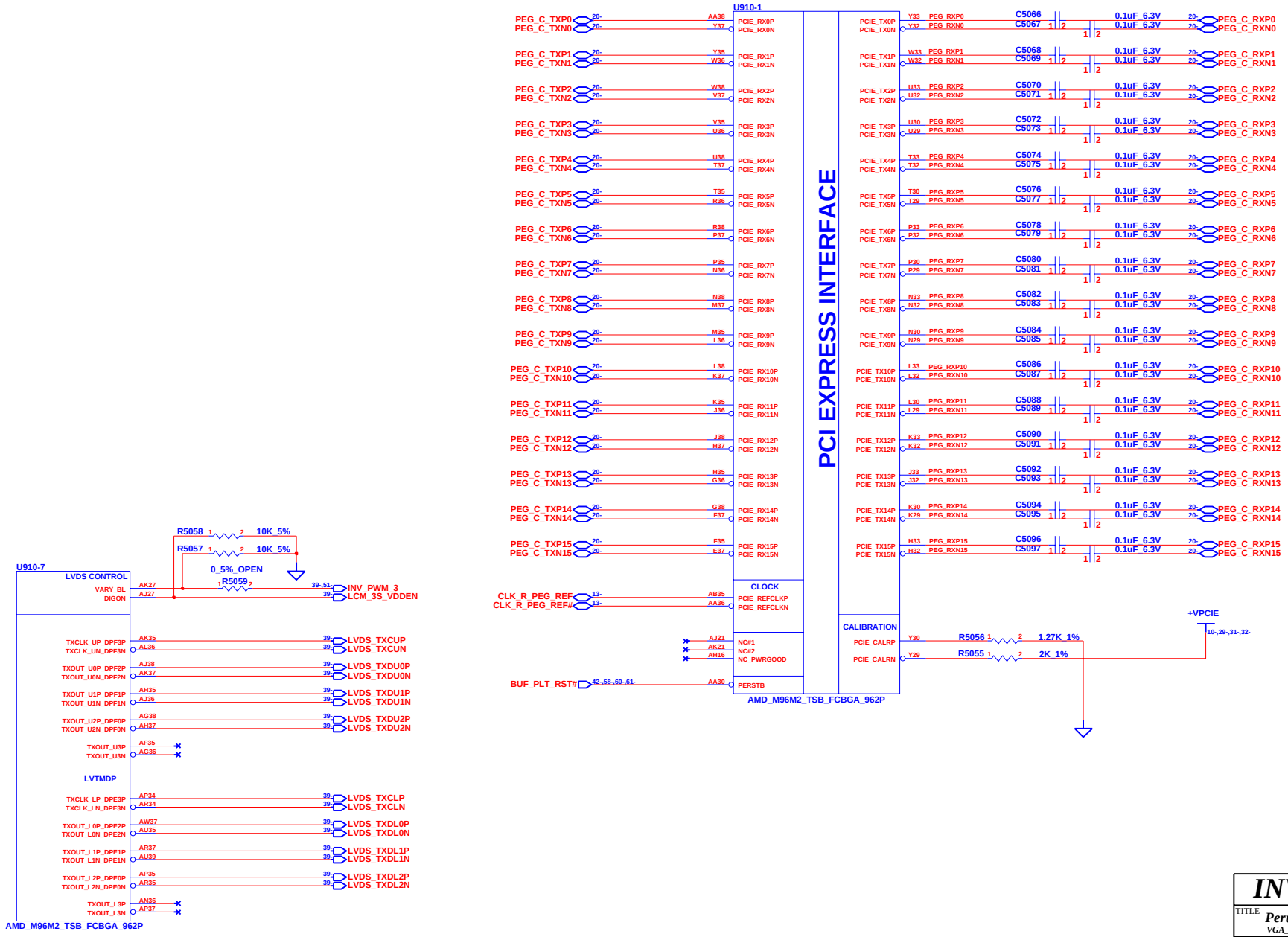

CHANGE by	Eric Lai	20-Jul-2009	

INVENTEC

TITLE *Perugia 10MG DDR3*
VGA_2

SIZE	CODE	DOC. NUMBER	REV
A3	CS	1310A2303-0-MTR	A01

SHEET 30 OF 69

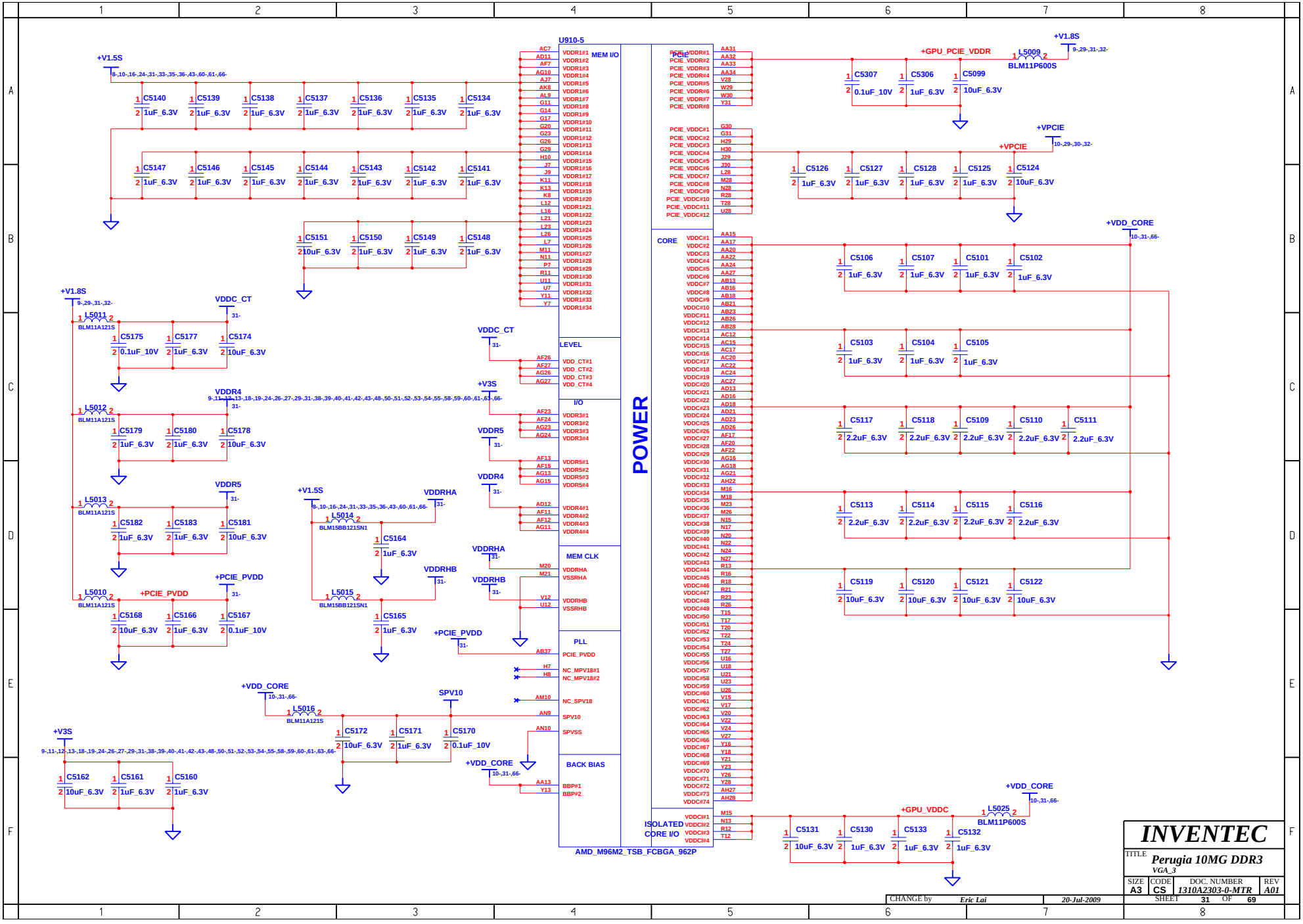
U910-5
POWER
MEM I/O
LEVEL
I/O
MEM CLK
PLL
BACK BIAS
PCIE
CORE
ISOLATED CORE I/O
AMD_M96M2_TSB_FCBGA_962P
+V1.5S
+V1.8S
+GPU_PCIE_VDDR
+VPCIE
+VDD_CORE
+GPU_VDDC
VDDC_CT
VDDR4
VDDR5
VDDRHA
VDDRHB
+PCIE_PVDD
+V3S
SPV10
INVENTEC
TITLE
Perugia 10MG DDR3
VGA_3
SIZE A3
CODE CS
DOC. NUMBER 1310A2303-0-MTR
REV A01
SHEET 31 OF 69
CHANGE by Eric Lai
20-Jul-2009

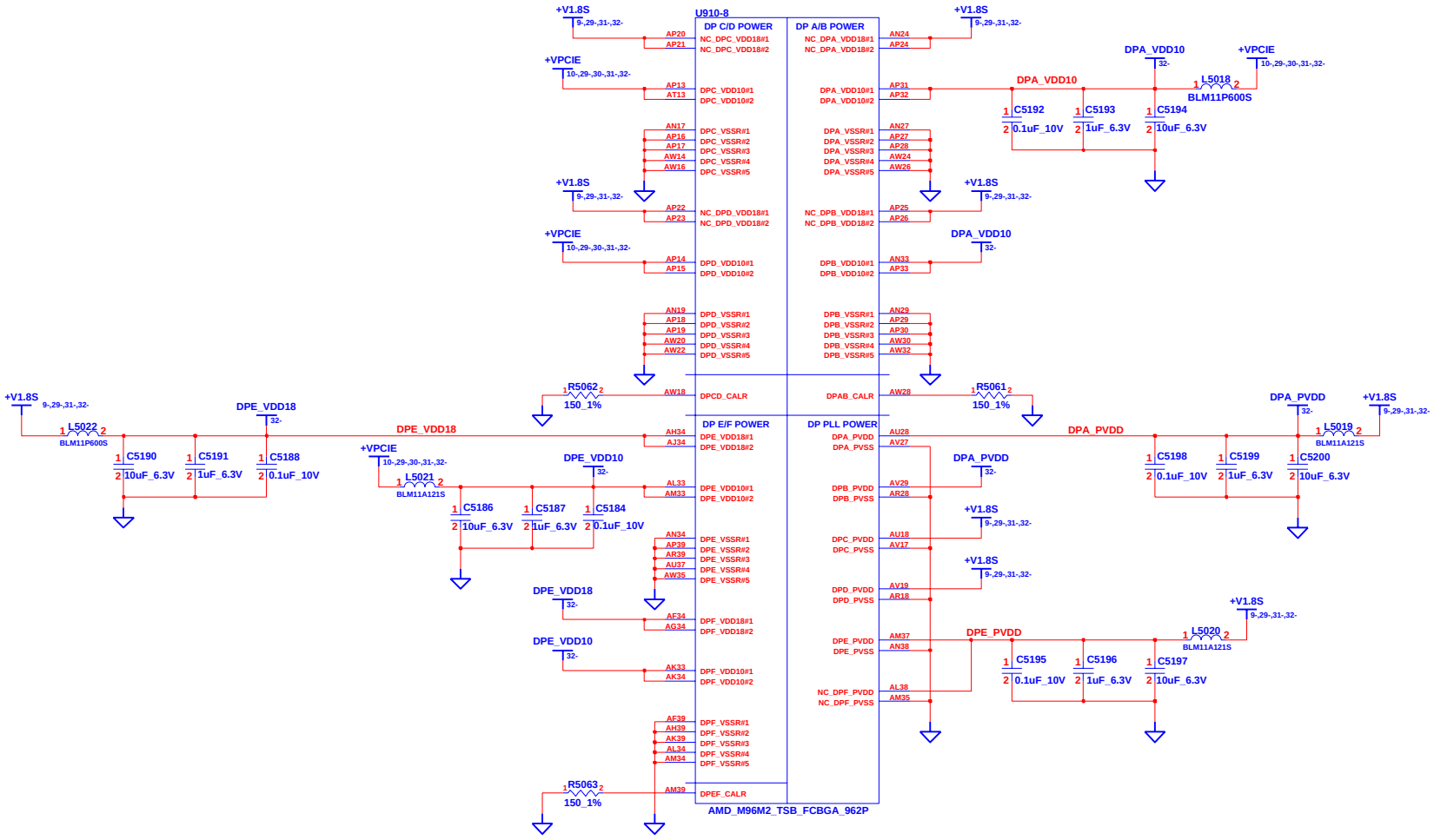

CHANGE by	Eric Lai	20-Jul-2009	

INVENTEC

TITLE: *Perugia 10MG DDR3*
VGA_4

SIZE	CODE	DOC. NUMBER	REV
A3	CS	1310A2303-0-MTR	A01

SHEET 32 OF 69

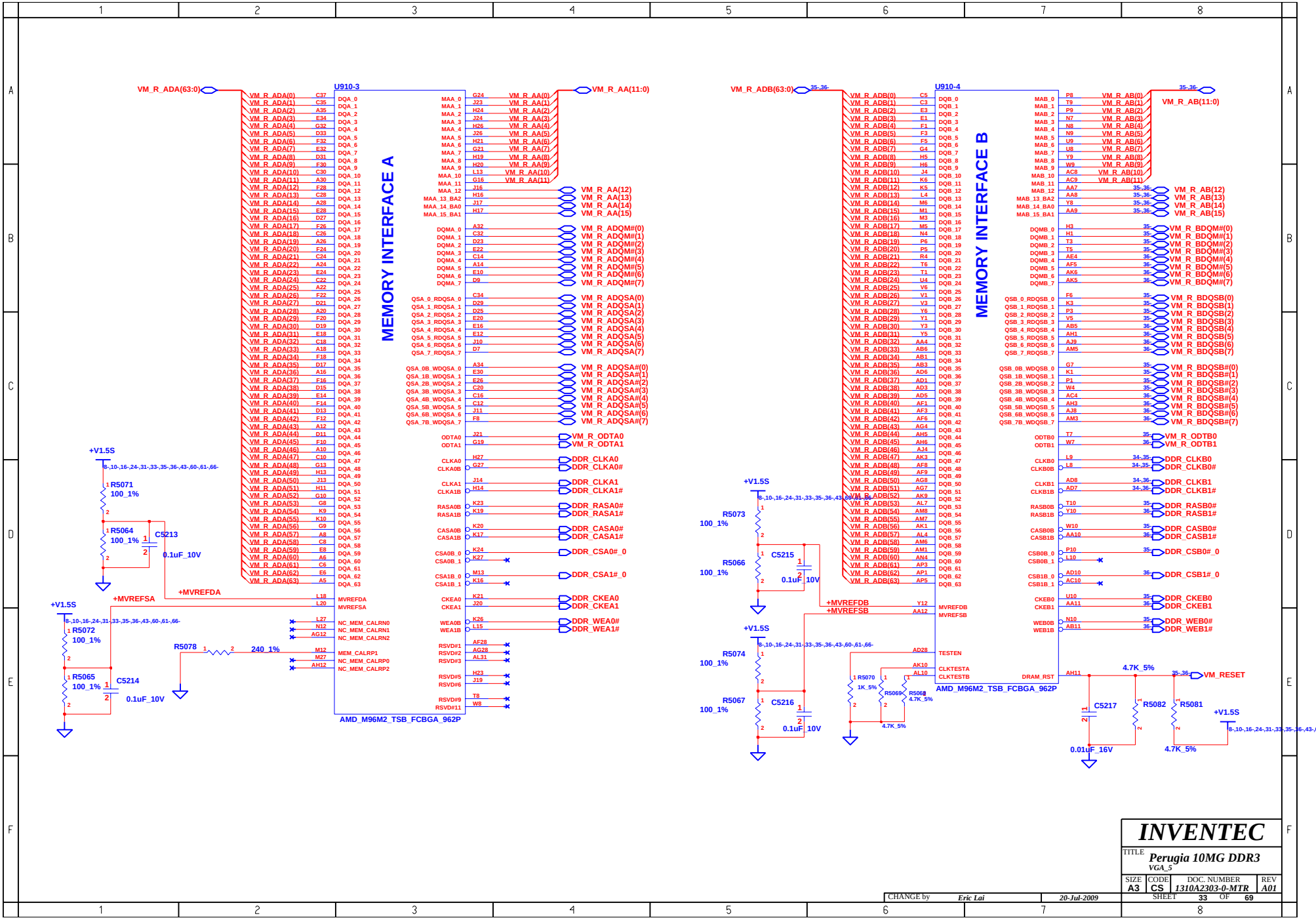
U910-3
MEMORY INTERFACE A
AMD_M96M2_TSB_FCBGA_962P
VM_R_ADA(63:0)
VM_R_AA(11:0)
U910-4
MEMORY INTERFACE B
AMD_M96M2_TSB_FCBGA_962P
VM_R_ADB(63:0)
VM_R_AB(11:0)
+V1.5S
R5071 100_1%
R5064 100_1%
C5213 0.1uF_10V
+MVREFSA
+MVREFDA
R5072 100_1%
R5065 100_1%
C5214 0.1uF_10V
R5078 240_1%
R5073 100_1%
R5066 100_1%
C5215 0.1uF_10V
+MVREFDB
+MVREFSB
R5074 100_1%
R5067 100_1%
C5216 0.1uF_10V
R5070 1K_5%
R5069 4.7K_5%
R5068 4.7K_5%
VM_RESET
C5217 0.01uF_16V
R5082 4.7K_5%
R5081 4.7K_5%
INVENTEC
TITLE Perugia 10MG DDR3
VGA_5
SIZE A3
CODE CS
DOC. NUMBER 1310A2303-0-MTR
REV A01
SHEET 33 OF 69
CHANGE by Eric Lai
20-Jul-2009

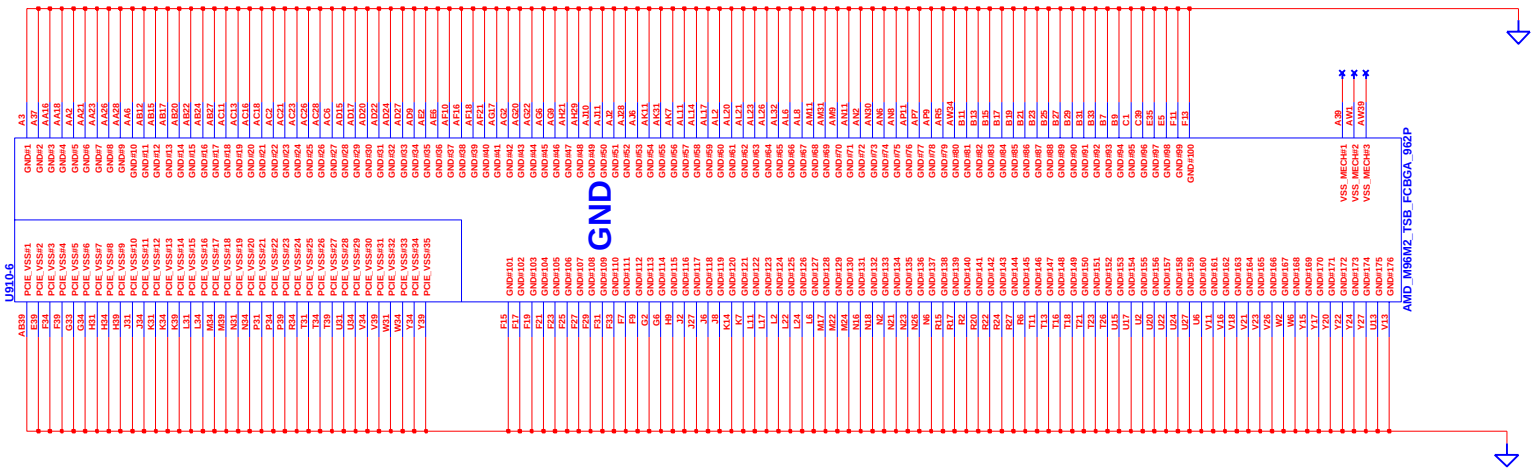

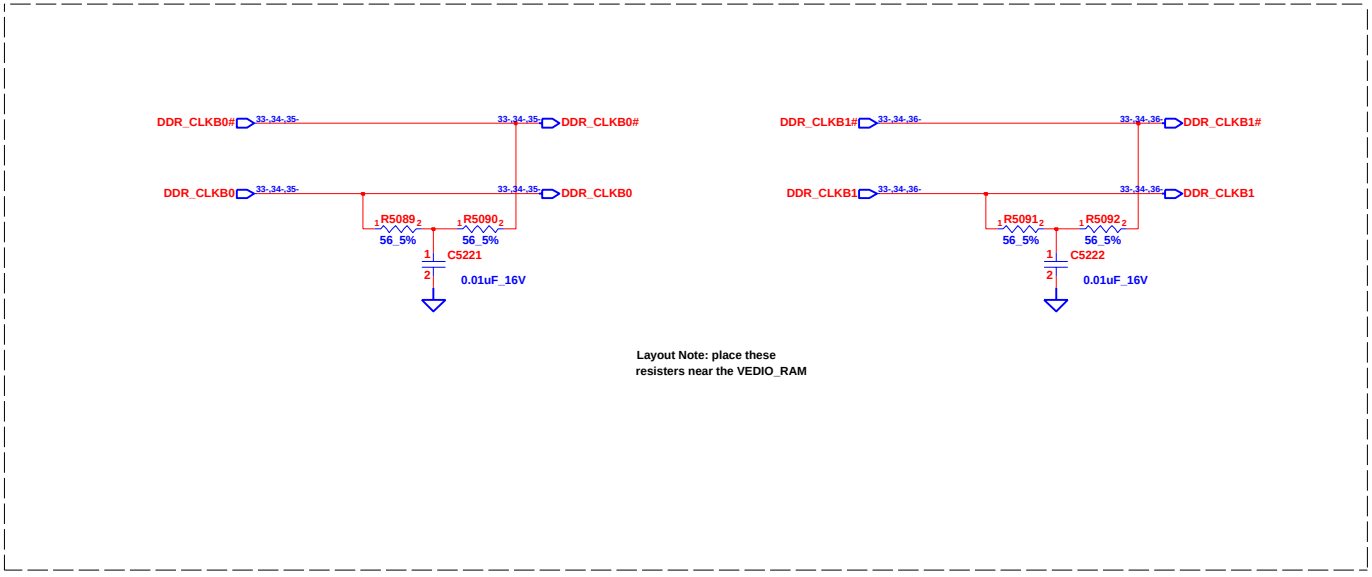

Layout Note: place these resisters near the VEDIO_RAM

CHANGE by	Eric Lai	20-Jul-2009	

INVENTEC

TITLE: Perugia 10MG DDR3
VGA_6

SIZE	CODE	DOC. NUMBER	REV
A3	CS	1310A2303-0-MTR	A01

SHEET 34 OF 69

M92 Use channel B

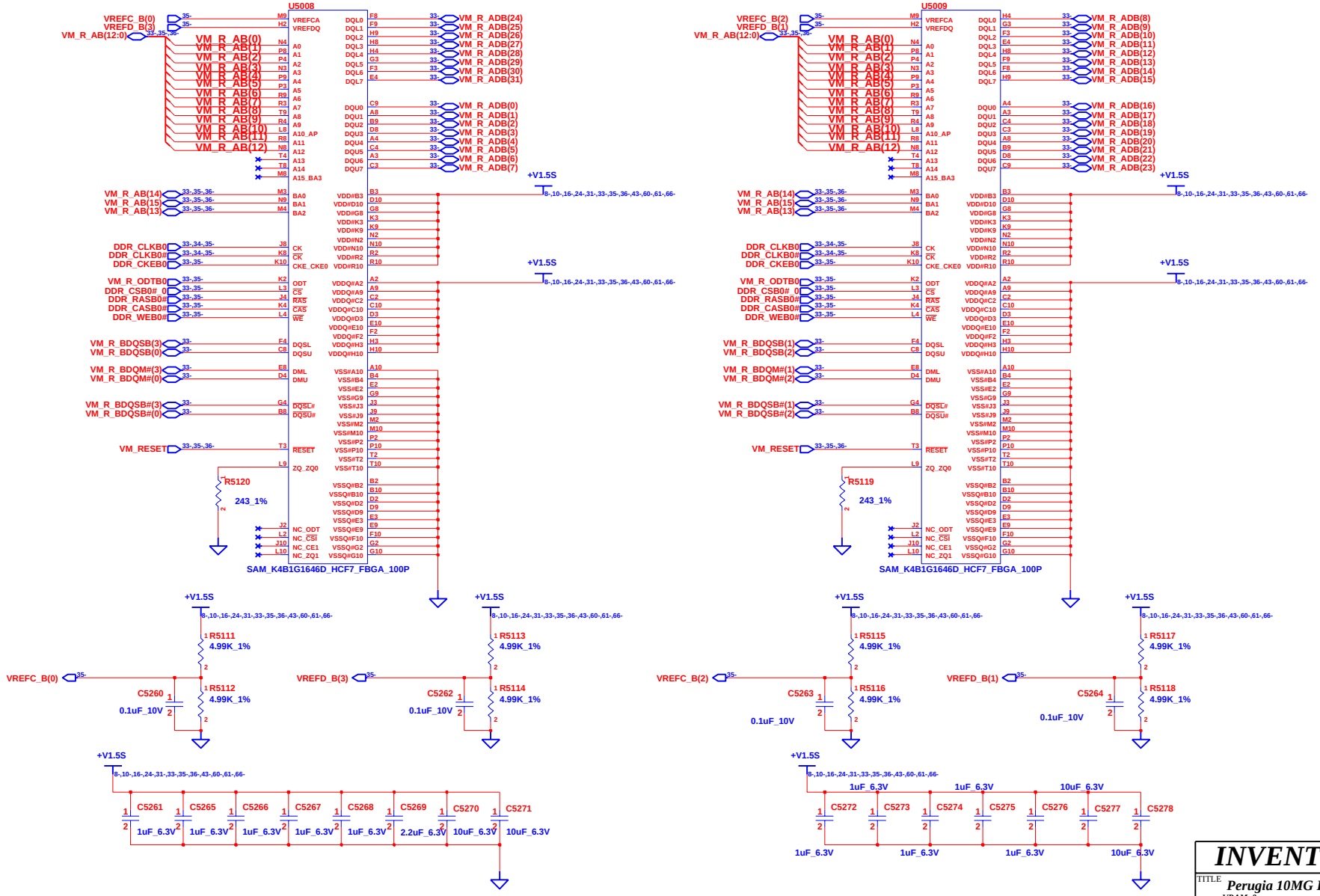

INVENTEC	
TITLE	Perugia 10MG DDR3 VRAM_0
SIZE A3	CODE CS
DOC. NUMBER	1310A2303-0-MTR
REV	A01
SHEET 35 OF 69	
CHANGE by	Eric Lai
20-Jul-2009	

M92 Use channel B

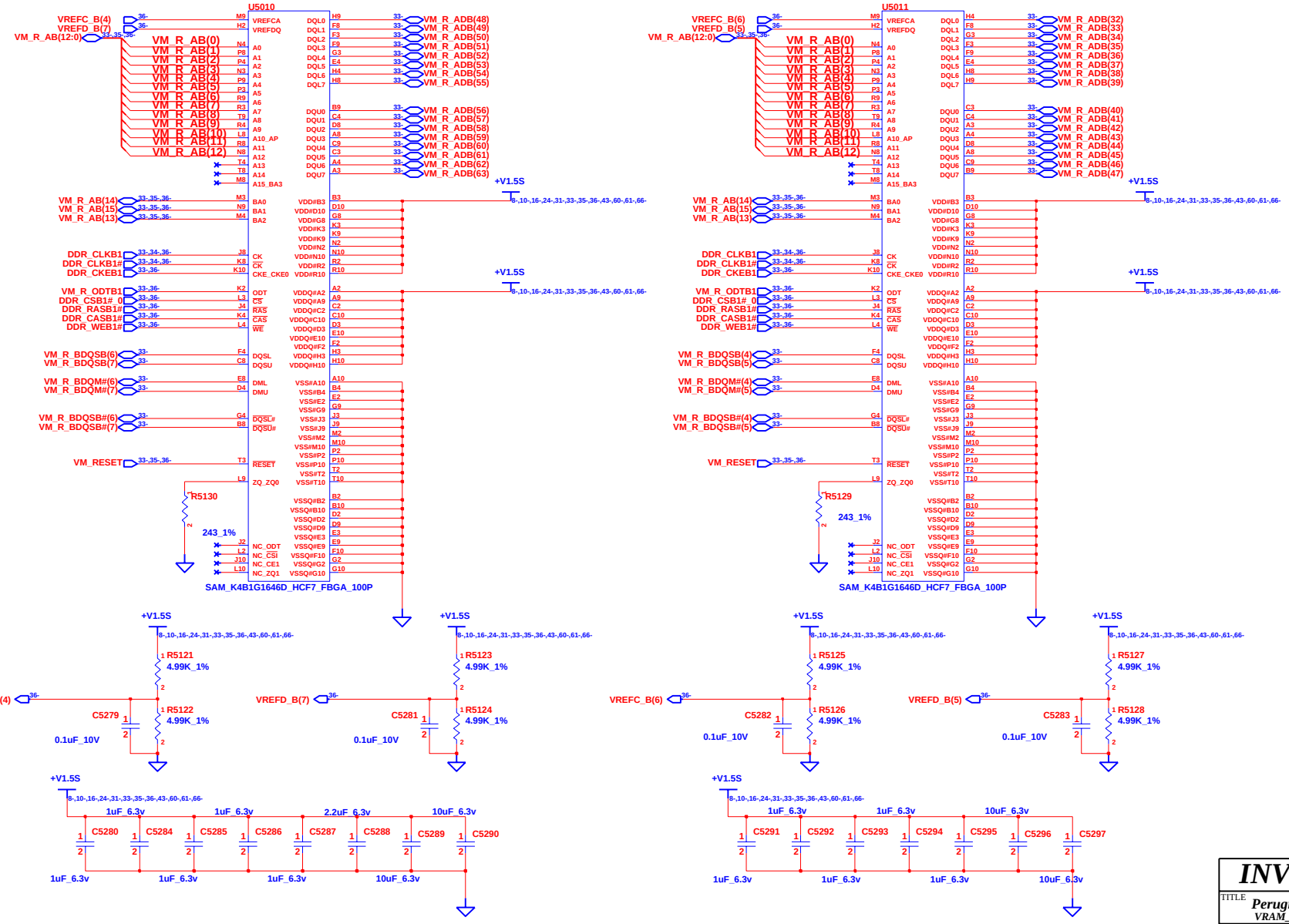

INVENTEC

TITLE *Perugia 10MG DDR3*
VRAM_1

SIZE	CODE	DOC. NUMBER	REV
A3	CS	1310A2303-0-MTR	A01

SHEET 36 OF 69

CHANGE by *Eric Lai* *20-Jul-2009*

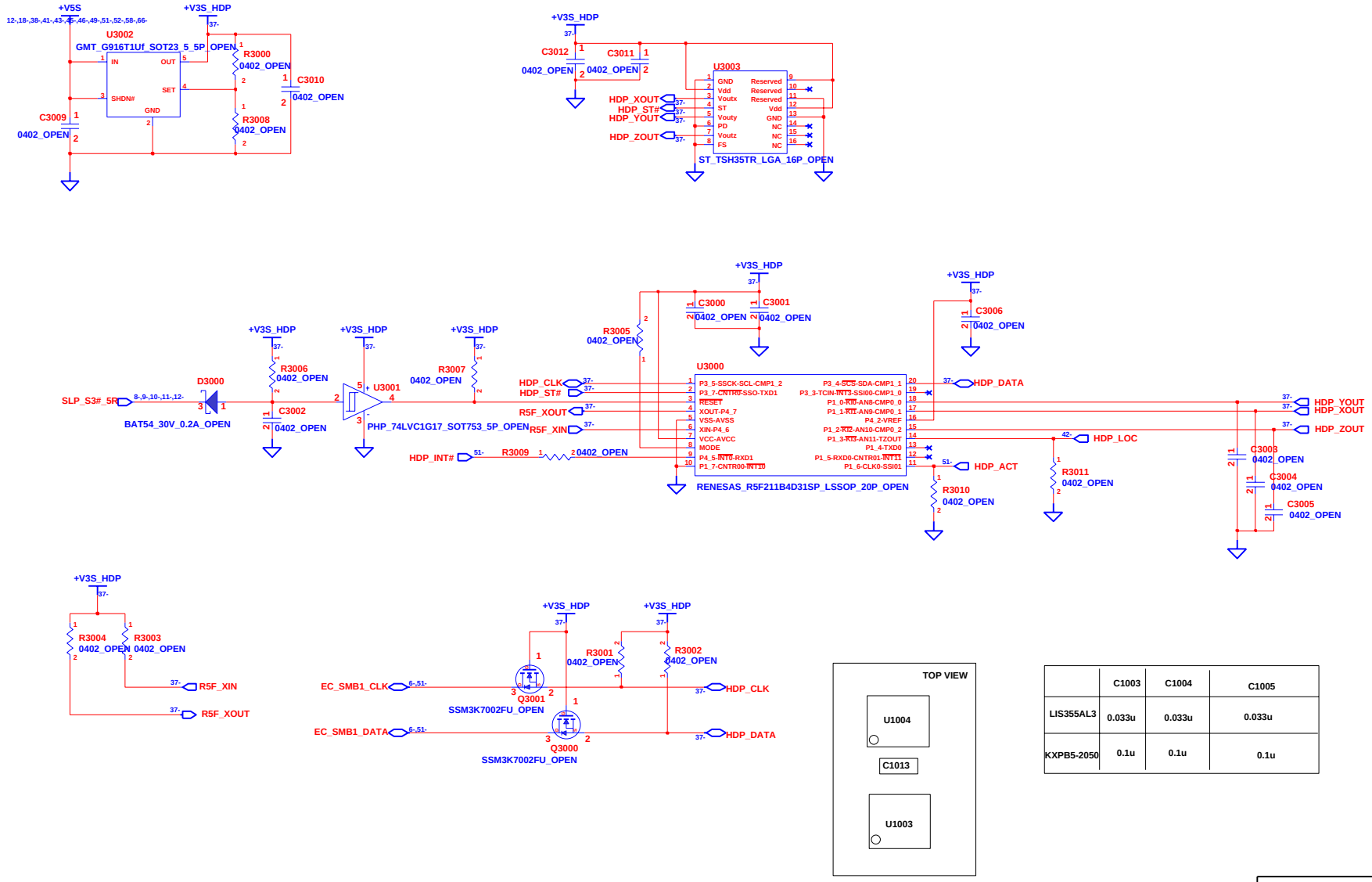

	C1003	C1004	C1005
LIS355AL3	0.033u	0.033u	0.033u
KXPB5-2050	0.1u	0.1u	0.1u

INVENTEC

TITLE: *Perugia 10MG DDR3*
3D Sensor

SIZE	CODE	DOC. NUMBER	REV
A3	CS	1310A2303-0-MTR	A01

SHEET 37 OF 69

CHANGE by *Eric Lai* *20-Jul-2009*

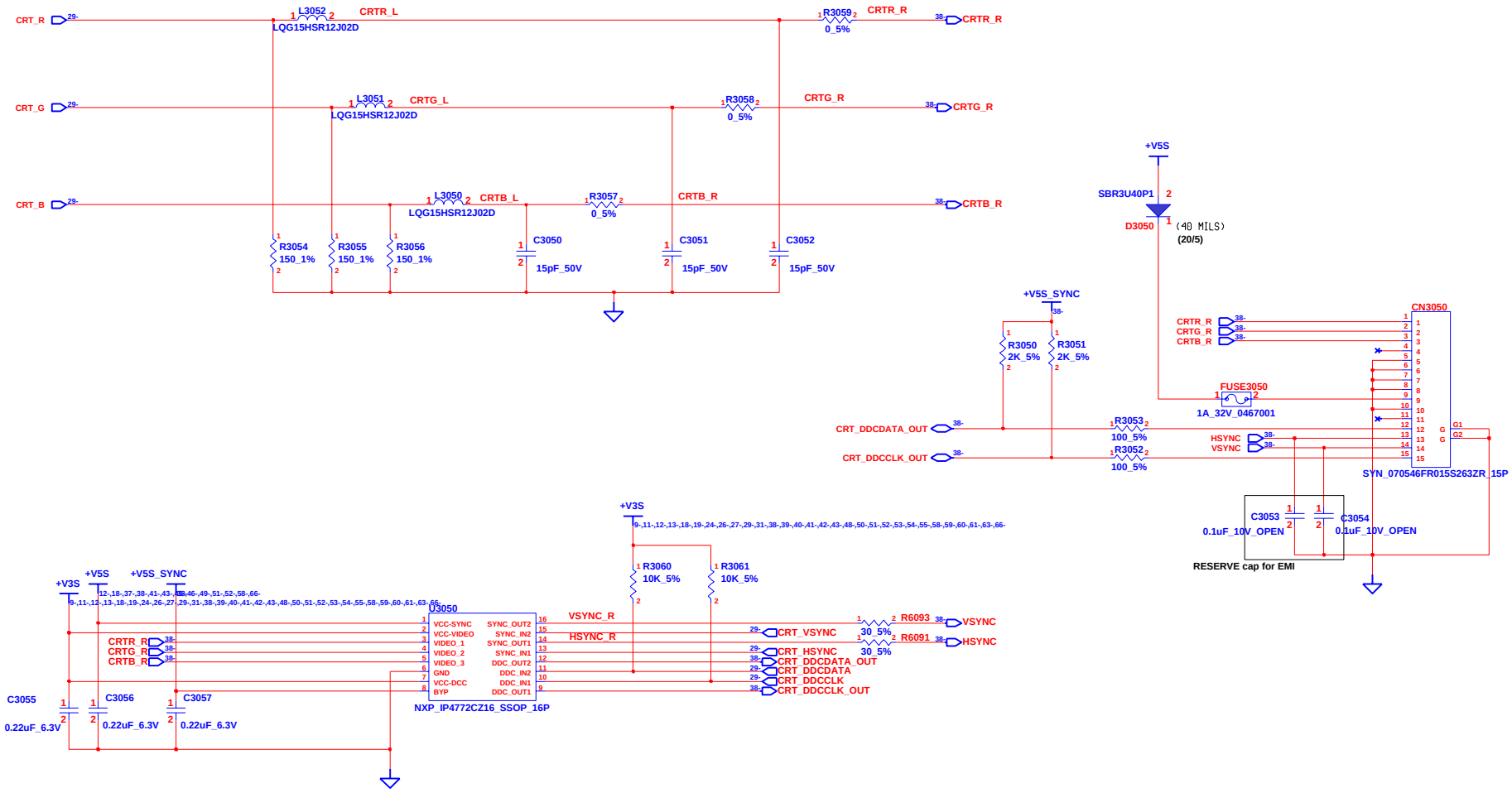

INVENTEC

TITLE: *Perugia 10MG DDR3*
CRT CONN

SIZE	CODE	DOC. NUMBER	REV
A3	CS	1310A2303-0-MTR	A01

SHEET 38 OF 69

CHANGE by *Eric Lai* *20-Jul-2009*

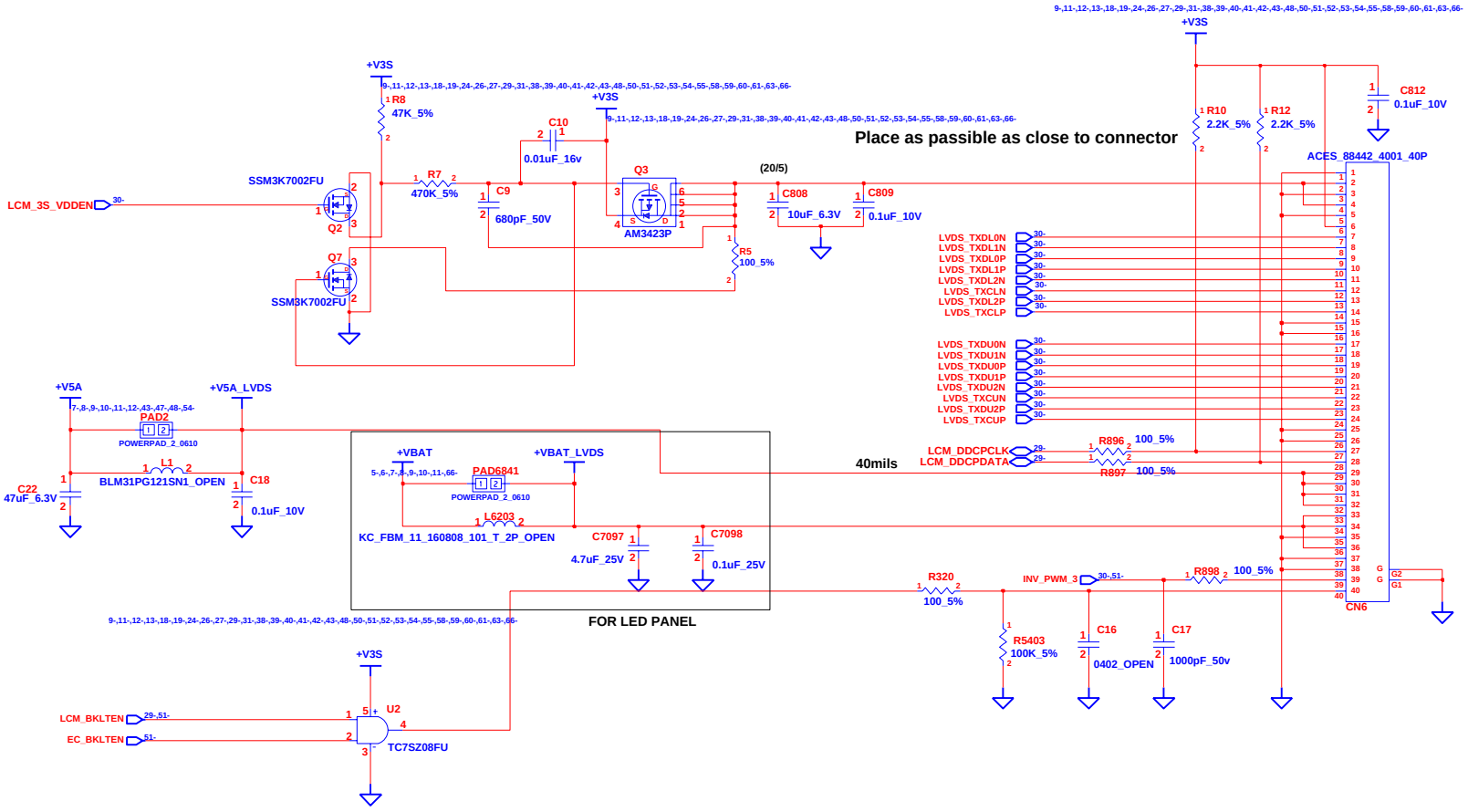

INVENTEC			
TITLE: Perugia 10MG DDR3 LCD CONN			
SIZE A3	CODE CS	DOC. NUMBER 1310A2303-0-MTR	REV A01
CHANGE by Eric Lai	20-Jul-2009	SHEET 39 OF 69	

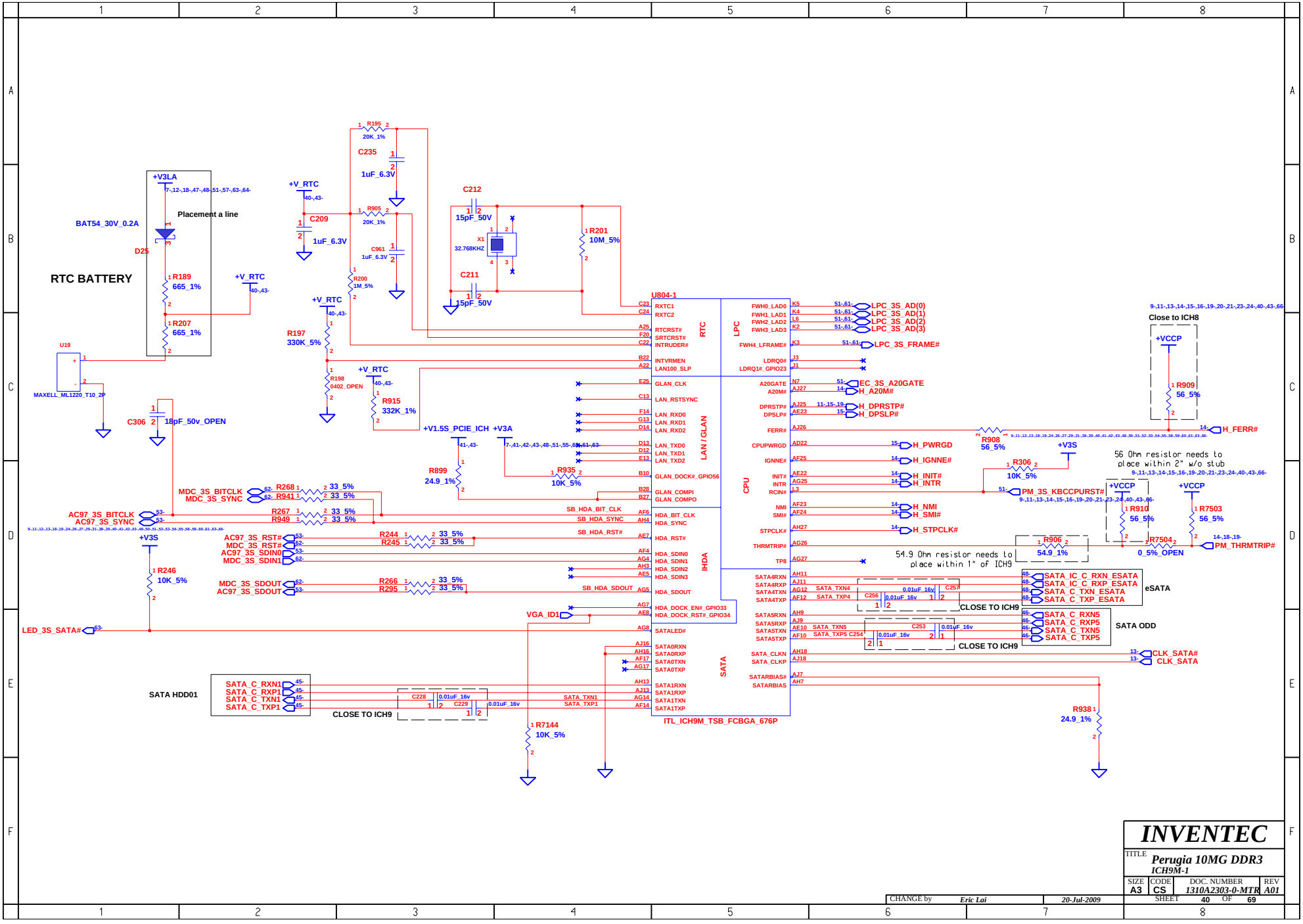

CHANGE by	Eric Lai	20-Jul-2009	

INVENTEC

TITLE: *Perugia 10MG DDR3*
ICH9M-1

SIZE	CODE	DOC. NUMBER	REV
A3	CS	1310A2303-0-MTR	A01

SHEET 40 OF 69

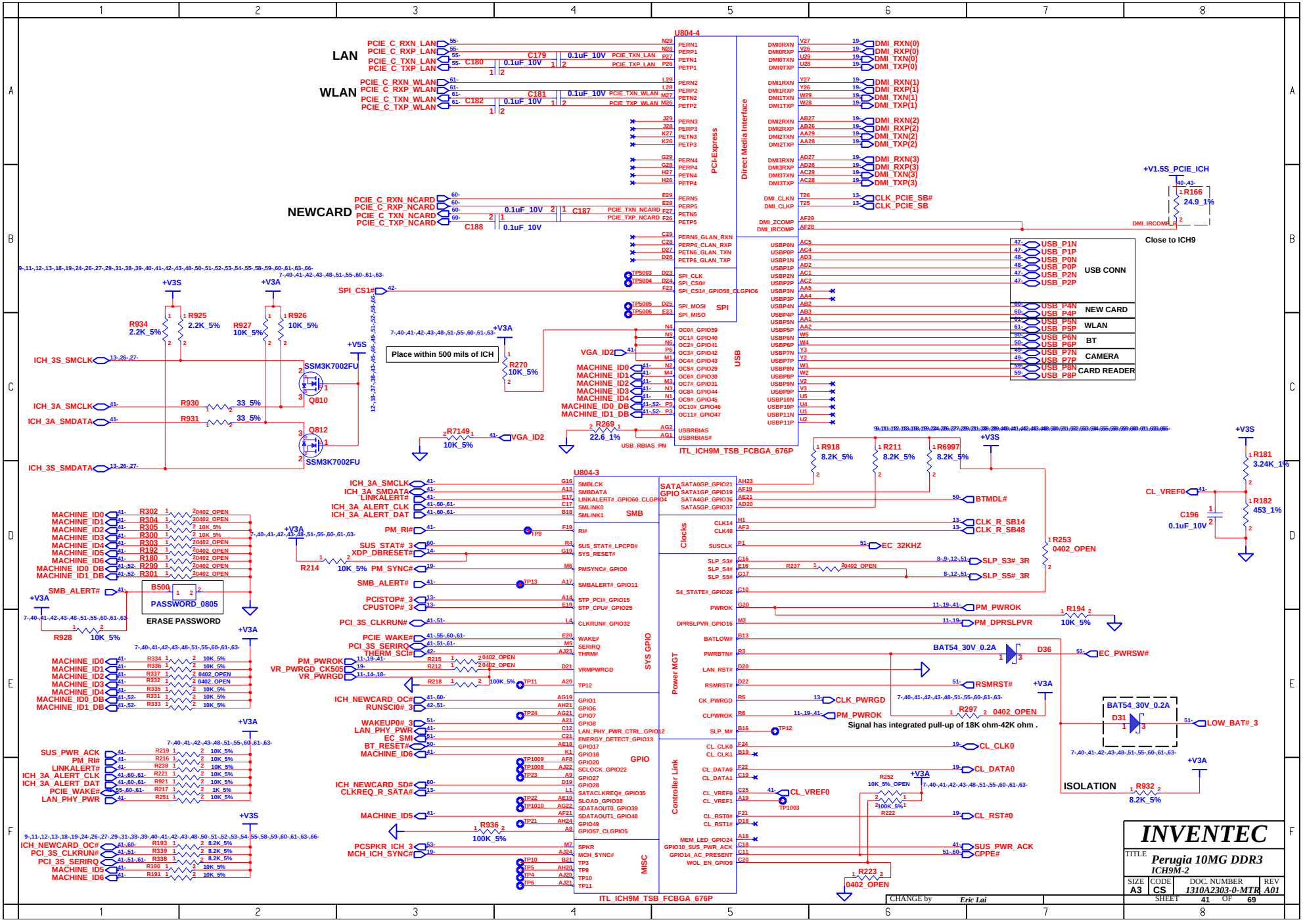
U804-4
LAN
WLAN
NEWCARD
PCI-Express
Direct Media Interface
SPI
USB
ITL_ICH9M_TSB_FCBGA_676P
USB CONN
NEW CARD
WLAN
BT
CAMERA
CARD READER
Close to ICH9
Place within 500 mils of ICH
SSM3K7002FU
Q810
Q812
U804-3
SMB
SYS GPIO
Clocks
Power MGT
GPIO
Controller Link
MISC
ERASE PASSWORD
PASSWORD_0805
Signal has integrated pull-up of 18K ohm-42K ohm .
ISOLATION
INVENTEC
Perugia 10MG DDR3
ICH9M-2
SIZE A3
CODE CS
DOC. NUMBER 1310A2303-0-MTR
REV A01
SHEET 41 OF 69
CHANGE by Eric Lai

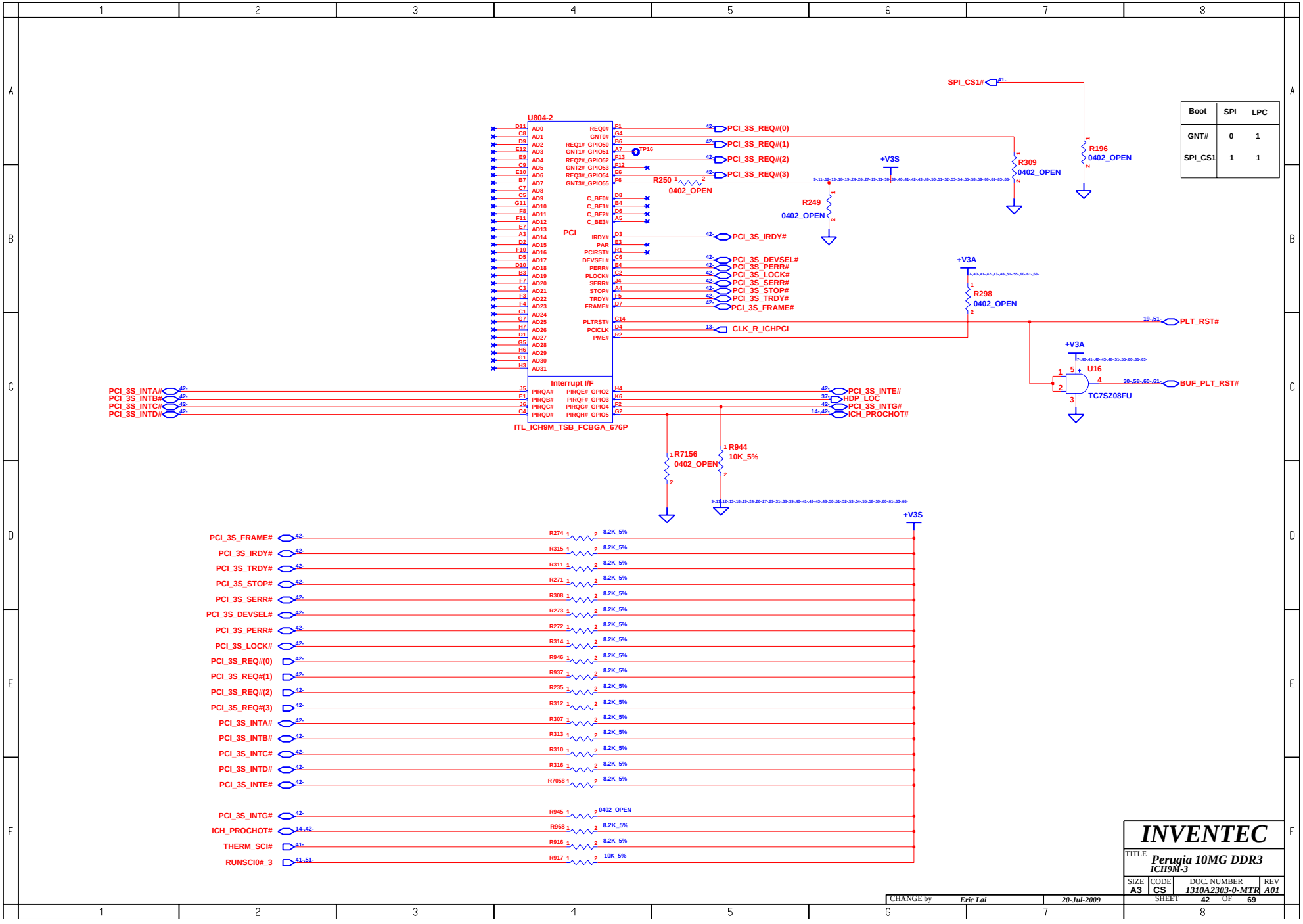

Boot	SPI	LPC
GNT#	0	1
SPI_CS1	1	1

INVENTEC

TITLE *Perugia 10MG DDR3 ICH9M-3*

SIZE	CODE	DOC. NUMBER	REV
A3	CS	1310A2303-0-MTR	A01

SHEET 42 OF 69

CHANGE by *Eric Lai* *20-Jul-2009*

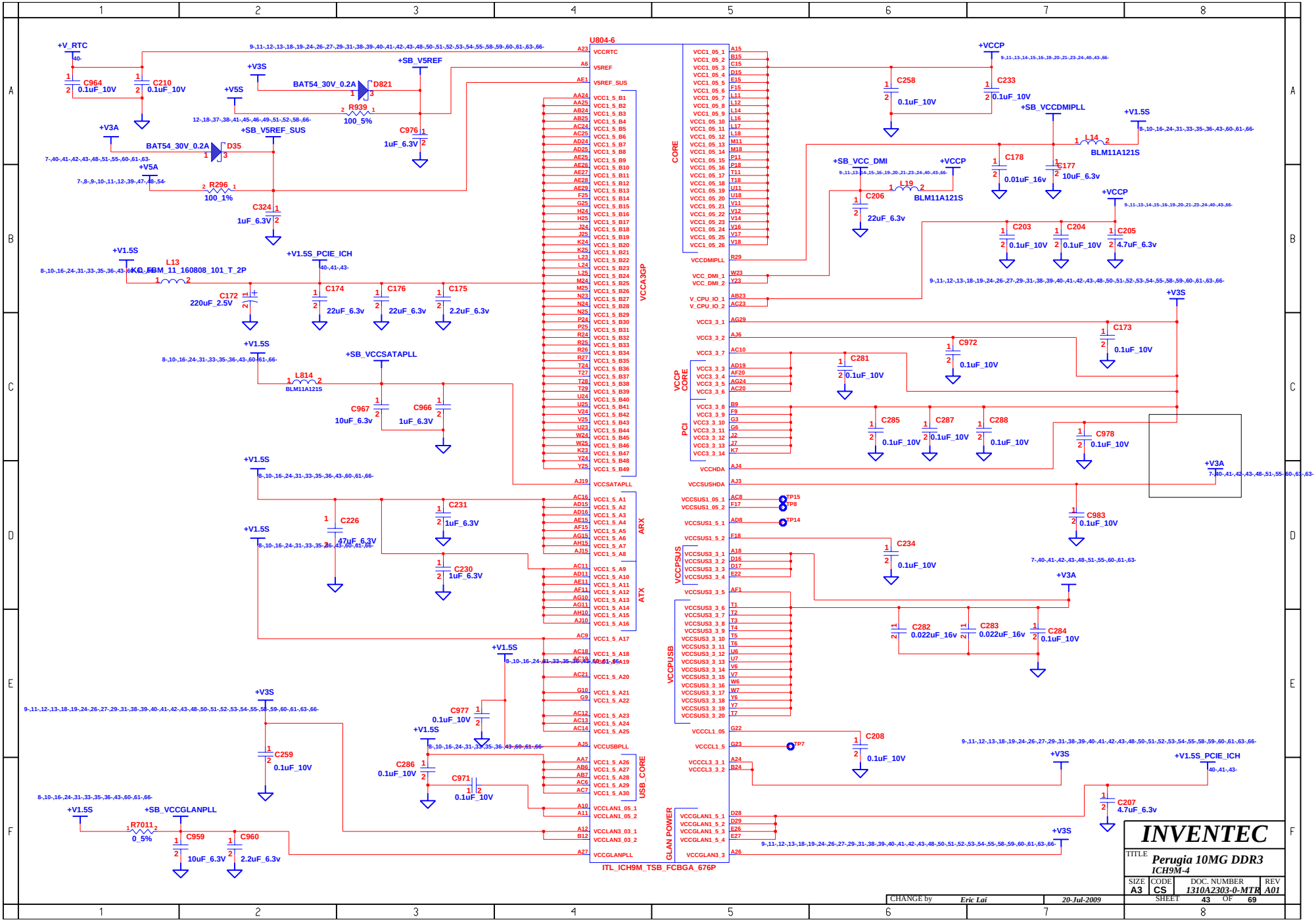
U804-6
ITL_ICH9M_TSB_FCBGA_676P
CORE
VCCA3GP
VCCP CORE
PCI
ARX
ATX
VCCPSUS
VCCPUSB
USB_CORE
GLAN POWER
+V_RTC
C964 0.1uF_10V
C210 0.1uF_10V
+V3S
+V5S
BAT54_30V_0.2A
D821
R939 100_5%
+SB_V5REF
+SB_V5REF_SUS
D35
R296 100_1%
C976 1uF_6.3V
C324 1uF_6.3V
+V3A
+V5A
+V1.5S
L13 FBM_11_160808_101_T_2P
+V1.5S_PCIE_ICH
C172 220uF_2.5V
C174 22uF_6.3v
C176 22uF_6.3v
C175 2.2uF_6.3v
+SB_VCCSATAPLL
L814 BLM11A121S
C967 10uF_6.3v
C966 1uF_6.3V
C231 1uF_6.3V
C226 47uF_6.3V
C230 1uF_6.3V
C977 0.1uF_10V
C286 0.1uF_10V
C971 0.1uF_10V
C259 0.1uF_10V
+SB_VCCGLANPLL
R7011 0_5%
C959 10uF_6.3V
C960 2.2uF_6.3v
+VCCP
C258 0.1uF_10V
C233 0.1uF_10V
+SB_VCCDMIPLL
L14 BLM11A121S
C178 0.01uF_16v
C177 10uF_6.3v
+SB_VCC_DMI
L19 BLM11A121S
C206 22uF_6.3v
C203 0.1uF_10V
C204 0.1uF_10V
C205 4.7uF_6.3v
C173 0.1uF_10V
C972 0.1uF_10V
C281 0.1uF_10V
C285 0.1uF_10V
C287 0.1uF_10V
C288 0.1uF_10V
C978 0.1uF_10V
C983 0.1uF_10V
TP15
TP8
TP14
C234 0.1uF_10V
C282 0.022uF_16v
C283 0.022uF_16v
C284 0.1uF_10V
TP7
C208 0.1uF_10V
C207 4.7uF_6.3v
INVENTEC
TITLE
Perugia 10MG DDR3
ICH9M-4
SIZE A3
CODE CS
DOC. NUMBER 1310A2303-0-MTR
REV A01
SHEET 43 OF 69
CHANGE by Eric Lai
20-Jul-2009

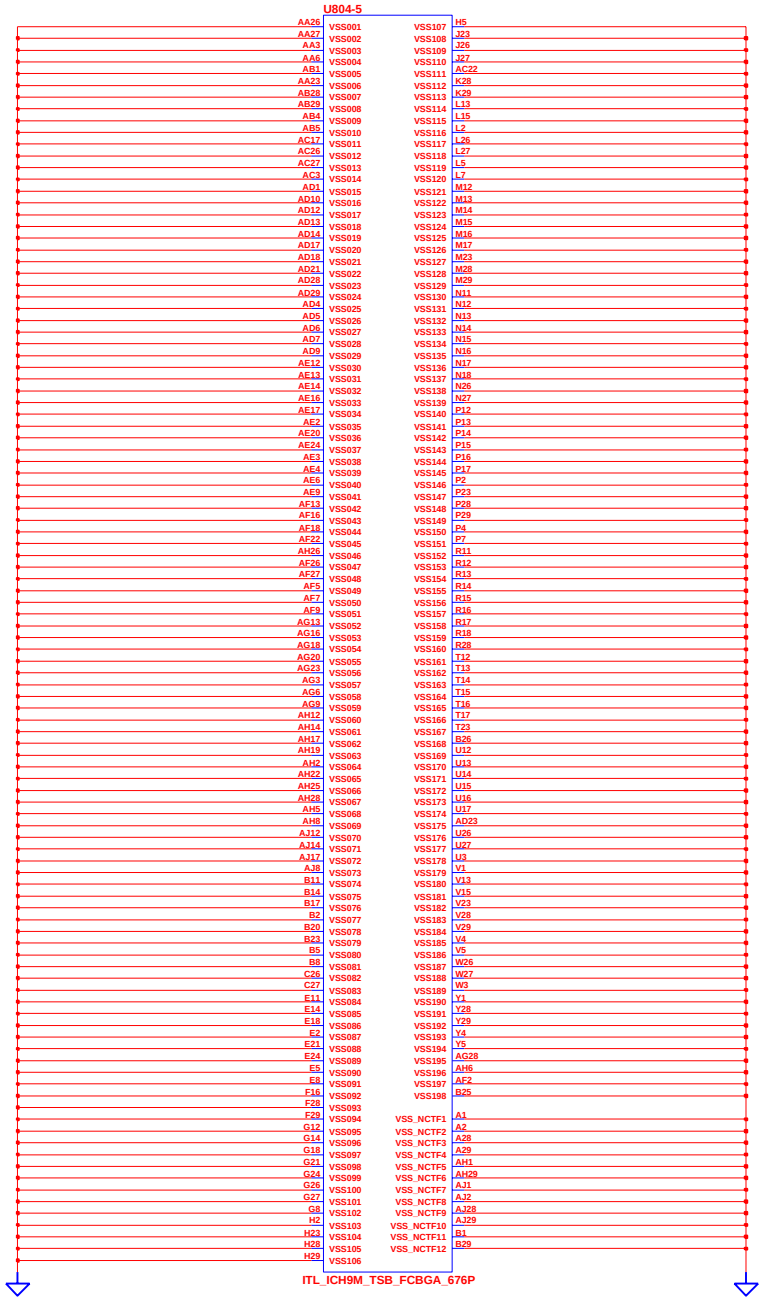

CHANGE by	Eric Lai	20-Jul-2009	

INVENTEC

TITLE: *Perugia 10MG DDR3*
ICH9M-5

SIZE	CODE	DOC. NUMBER	REV
A3	CS	1310A2303-0-MTR	A01

SHEET 44 OF 69

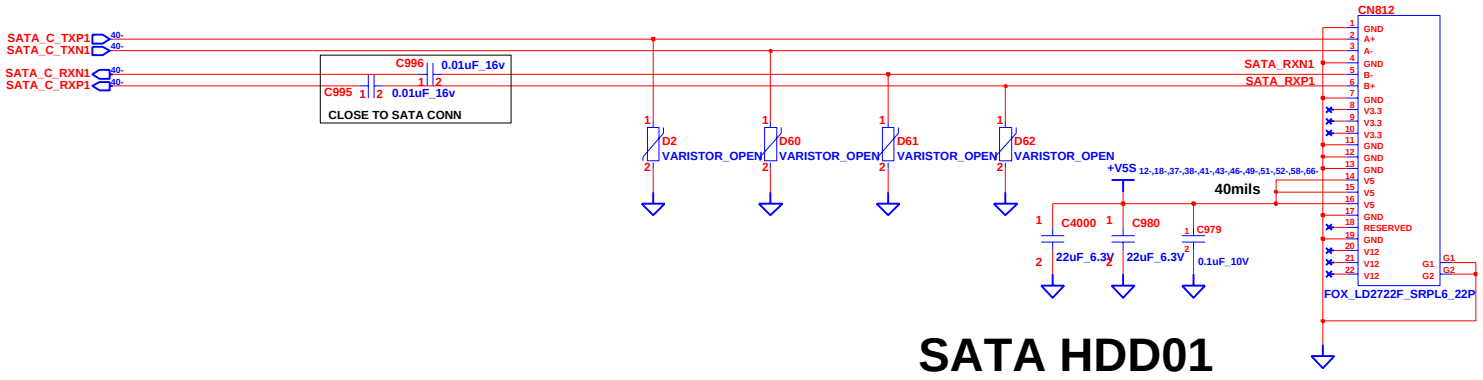

SATA HDD01

INVENTEC			
TITLE Perugia 10MG DDR3 HDD CONN			
SIZE A3	CODE CS	DOC. NUMBER 1310A2303-0-MTR	REV A01
		SHEET 45 OF 69	

CHANGE by Eric Lai 20-Jul-2009

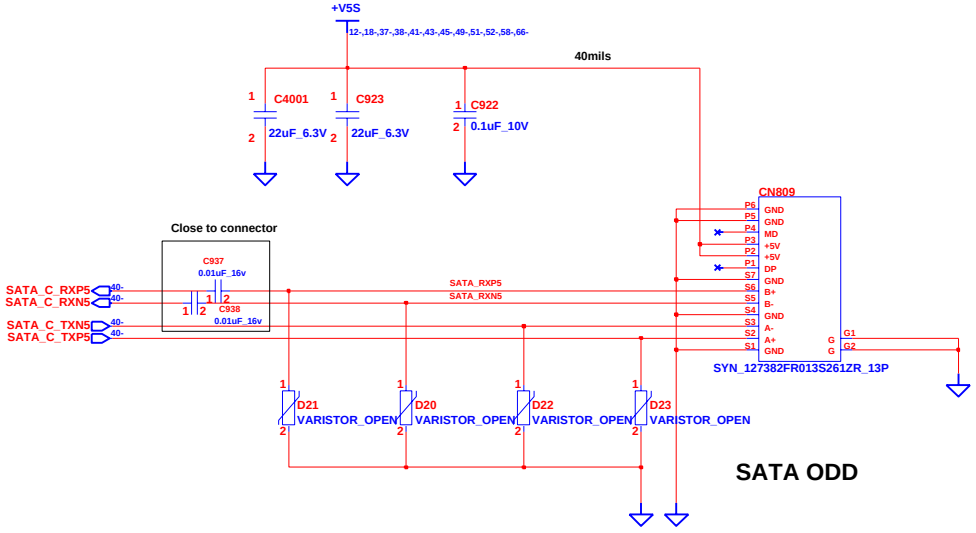

SATA ODD

CHANGE by	Eric Lai	20-Jul-2009	

INVENTEC

TITLE *Perugia 10MG DDR3*
SATA ODD

SIZE	CODE	DOC. NUMBER	REV
A3	CS	1310A2303-0-MTR	A01

SHEET 46 OF 69

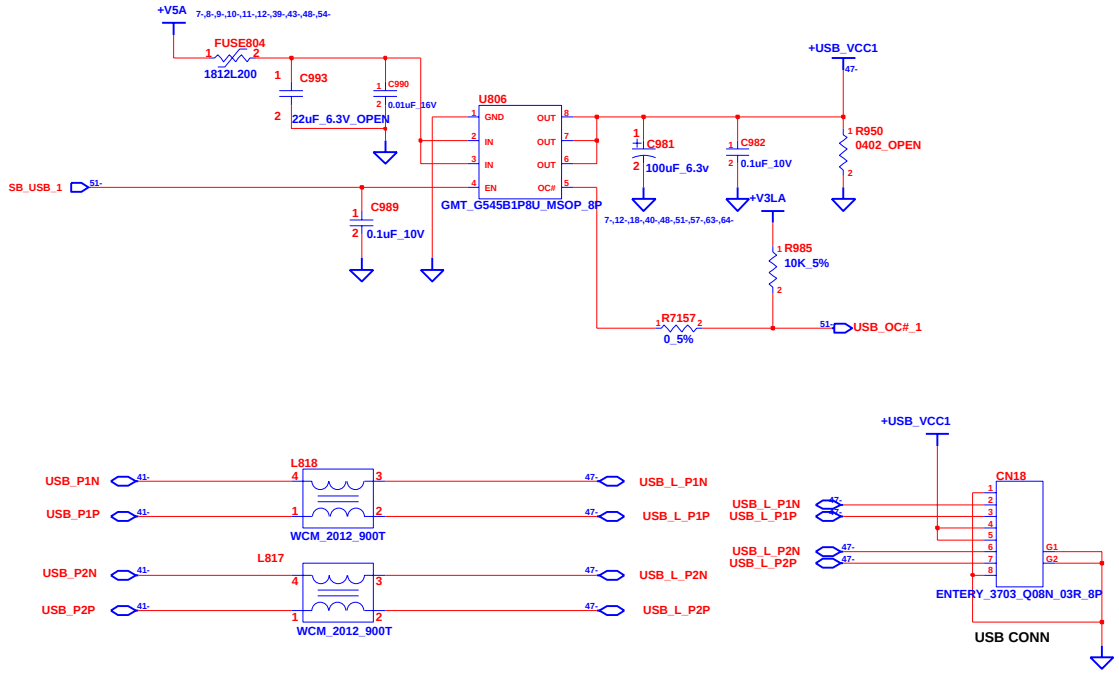

INVENTEC

TITLE **Perugia 10MG DDR3**
USB CONN/USB(DB)

SIZE	CODE	DOC. NUMBER	REV
A3	CS	1310A2303-0-MTR	A01

SHEET 47 OF 69

CHANGE by	Eric Lai	20-Jul-2009

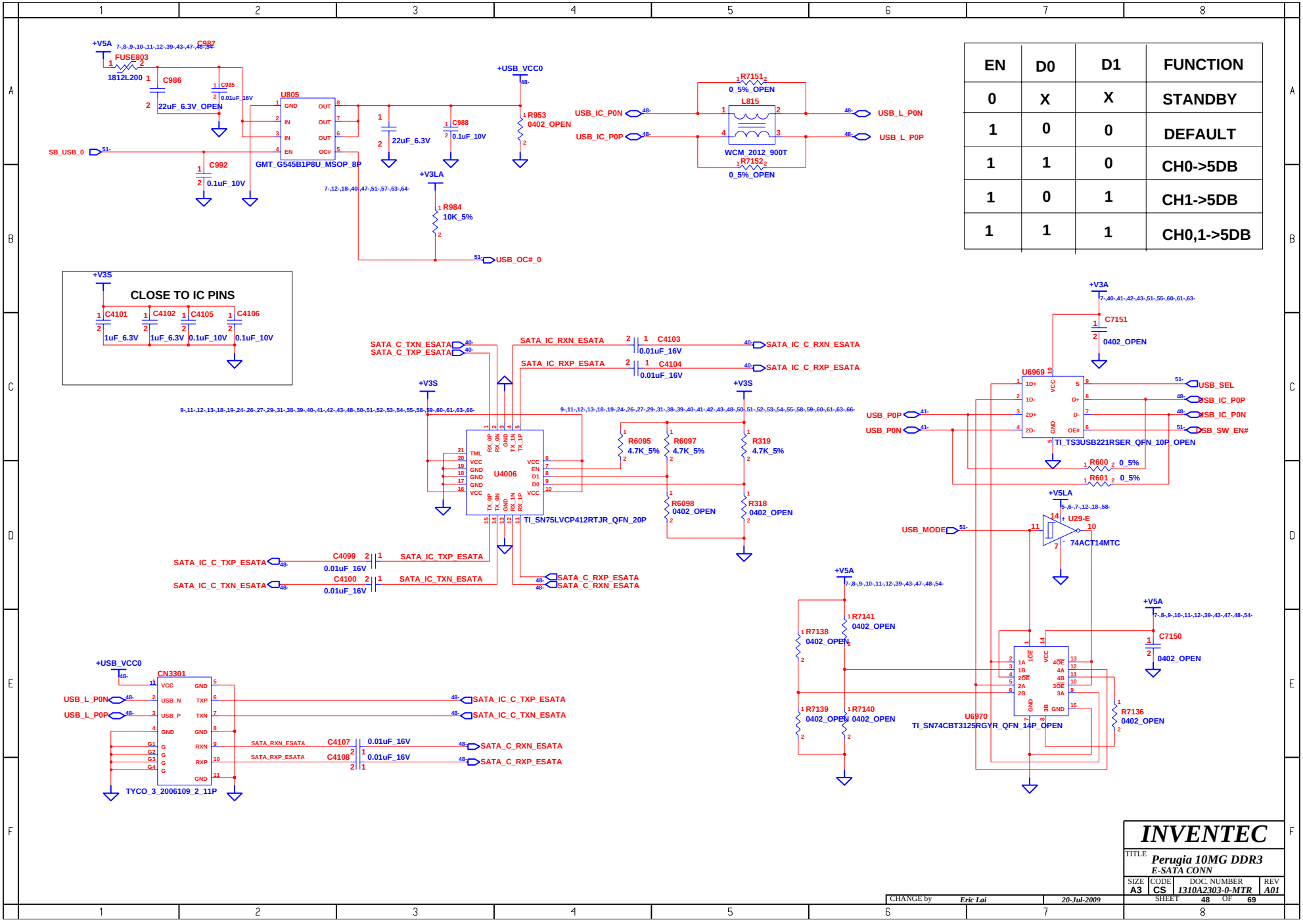

EN	D0	D1	FUNCTION
0	X	X	STANDBY
1	0	0	DEFAULT
1	1	0	CH0->5DB
1	0	1	CH1->5DB
1	1	1	CH0,1->5DB

INVENTEC

TITLE: Perugia 10MG DDR3 E-SATA CONN

SIZE	CODE	DOC. NUMBER	REV
A3	CS	1310A2303-0-MTR	A01

SHEET 48 OF 69

CHANGE by Eric Lai 20-Jul-2009

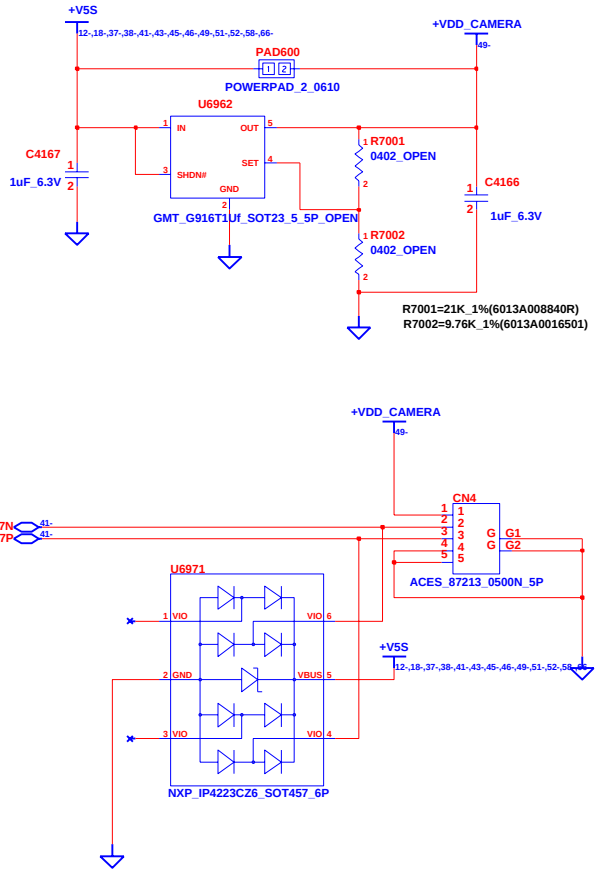

CHANGE by	*Eric Lai*	*20-Jul-2009*	

INVENTEC

TITLE *Perugia 10MG DDR3*
Camera

SIZE	CODE	DOC. NUMBER	REV
A3	CS	*1310A2303-0-MTR*	*A01*

SHEET 49 OF 69

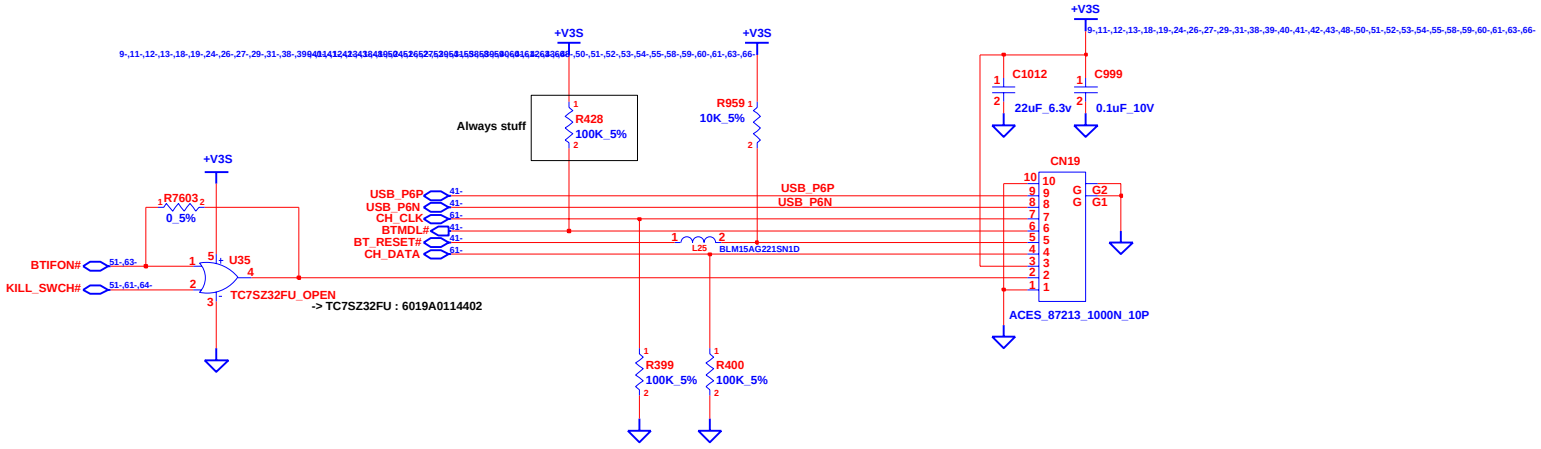

CHANGE by	Eric Lai	20-Jul-2009	

INVENTEC

TITLE **Perugia 10MG DDR3**
Bluetooth

SIZE	CODE	DOC. NUMBER	REV
A3	CS	1310A2303-0-MTR	A01

SHEET 50 OF 69

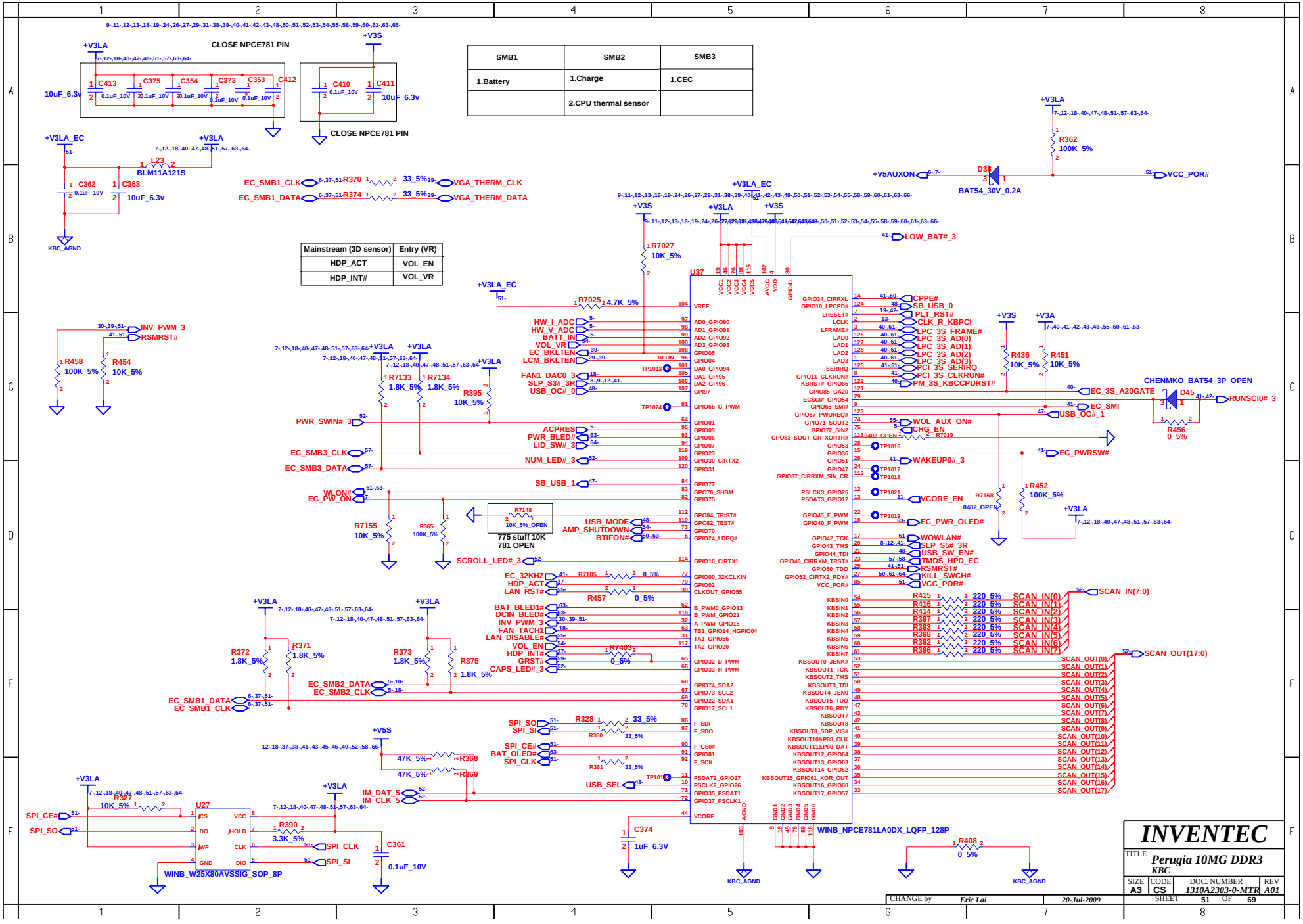

SMB1	SMB2	SMB3
1.Battery	1.Charge	1.CEC
	2.CPU thermal sensor	

Mainstream (3D sensor)	Entry (VR)
HDP_ACT	VOL_EN
HDP_INT#	VOL_VR

CHANGE by	Eric Lai	20-Jul-2009	

INVENTEC

TITLE: Perugia 10MG DDR3 KBC

SIZE	CODE	DOC. NUMBER	REV
A3	CS	1310A2303-0-MTR	A01

SHEET 51 OF 69

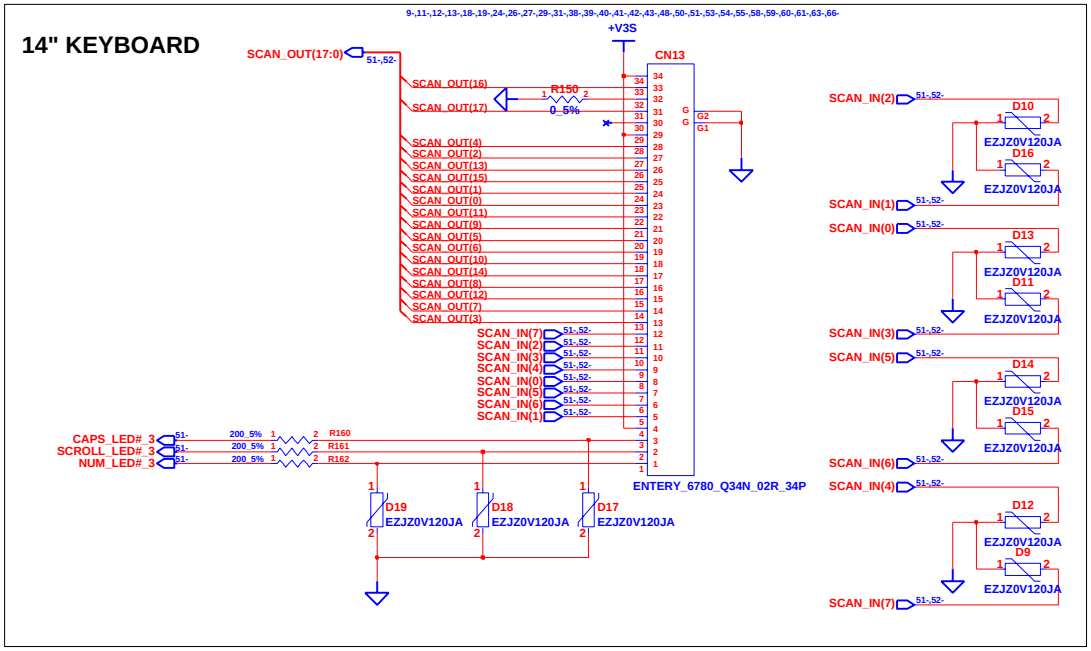

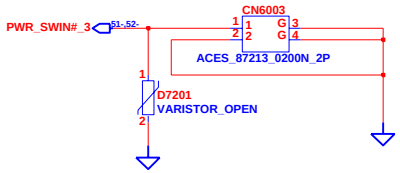

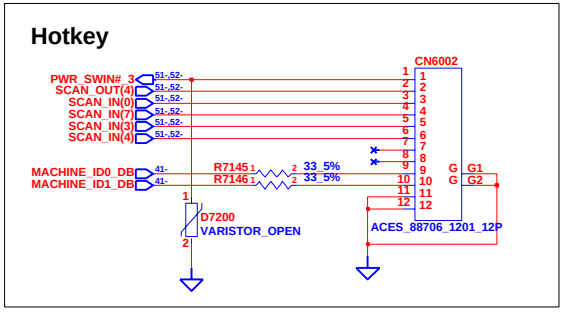

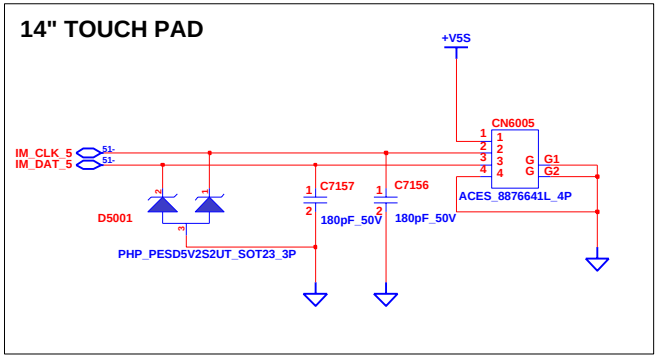

CHANGE by	Eric Lai	20-Jul-2009	

INVENTEC

TITLE *Perugia 10MG DDR3*
K/B & TP/B CONN

SIZE	CODE	DOC. NUMBER	REV
A3	CS	1310A2303-0-MTR	A01

SHEET 52 OF 69

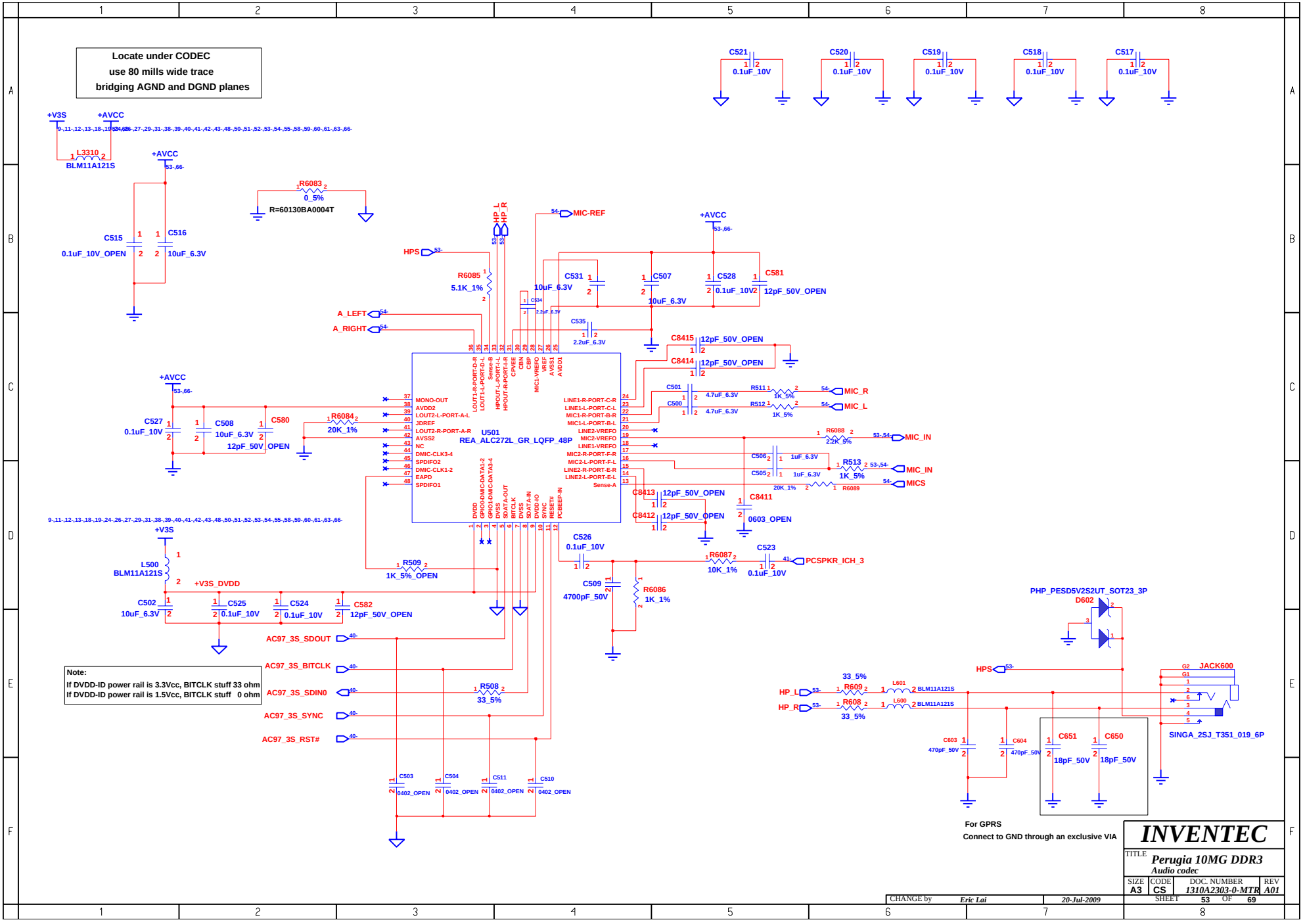
Locate under CODEC
use 80 mills wide trace
bridging AGND and DGND planes
U501
REA_ALC272L_GR_LQFP_48P
MONO-OUT
AVDD2
LOUT2-L-PORT-A-L
IDREF
LOUT2-R-PORT-A-R
AVSS2
NC
DMIC-CLK3-4
SPDIFO2
DMIC-CLK1-2
EAPD
SPDIFO1
LINE1-R-PORT-C-R
LINE1-L-PORT-C-L
MIC1-R-PORT-B-R
MIC1-L-PORT-B-L
LINE2-VREFO
MIC2-VREFO
LINE1-VREFO
MIC2-R-PORT-F-R
MIC2-L-PORT-F-L
LINE2-R-PORT-E-R
LINE2-L-PORT-E-L
Sense-A
MIC-REF
HPS
A_LEFT
A_RIGHT
HP_L
HP_R
MIC_R
MIC_L
MIC_IN
MICS
PCSPKR_ICH_3
AC97_3S_SDOUT
AC97_3S_BITCLK
AC97_3S_SDIN0
AC97_3S_SYNC
AC97_3S_RST#
+V3S
+AVCC
+V3S_DVDD
L3310
BLM11A121S
L500
BLM11A121S
R6083
0_5%
R=60130BA0004T
R6085
5.1K_1%
R6084
20K_1%
R509
1K_5%_OPEN
R508
33_5%
R6087
10K_1%
R6086
1K_1%
R6088
2.2K_5%
R513
1K_5%
R6089
20K_1%
C8411
0603_OPEN
C8413
12pF_50V_OPEN
C8412
12pF_50V_OPEN
C8415
12pF_50V_OPEN
C8414
12pF_50V_OPEN
C581
12pF_50V_OPEN
C582
12pF_50V_OPEN
C580
12pF_50V_OPEN
C521
0.1uF_10V
C520
0.1uF_10V
C519
0.1uF_10V
C518
0.1uF_10V
C517
0.1uF_10V
C515
0.1uF_10V_OPEN
C516
10uF_6.3V
C527
0.1uF_10V
C508
10uF_6.3V
C502
10uF_6.3V
C525
0.1uF_10V
C524
0.1uF_10V
C531
10uF_6.3V
C507
10uF_6.3V
C528
0.1uF_10V
C534
2.2uF_6.3V
C535
2.2uF_6.3V
C501
4.7uF_6.3V
C500
4.7uF_6.3V
R511
1K_5%
R512
1K_5%
C506
1uF_6.3V
C505
1uF_6.3V
C526
0.1uF_10V
C509
4700pF_50V
C523
0.1uF_10V
C503
0402_OPEN
C504
0402_OPEN
C511
0402_OPEN
C510
0402_OPEN
Note:
If DVDD-ID power rail is 3.3Vcc, BITCLK stuff 33 ohm
If DVDD-ID power rail is 1.5Vcc, BITCLK stuff 0 ohm
PHP_PESD5V2S2UT_SOT23_3P
D602
JACK600
SINGA_2SJ_T351_019_6P
L601
BLM11A121S
L600
BLM11A121S
R609
33_5%
R608
33_5%
C603
470pF_50V
C604
470pF_50V
C651
18pF_50V
C650
18pF_50V
For GPRS
Connect to GND through an exclusive VIA
INVENTEC
TITLE
Perugia 10MG DDR3
Audio codec
SIZE A3
CODE CS
DOC. NUMBER 1310A2303-0-MTR
REV A01
SHEET 53 OF 69
CHANGE by Eric Lai
20-Jul-2009

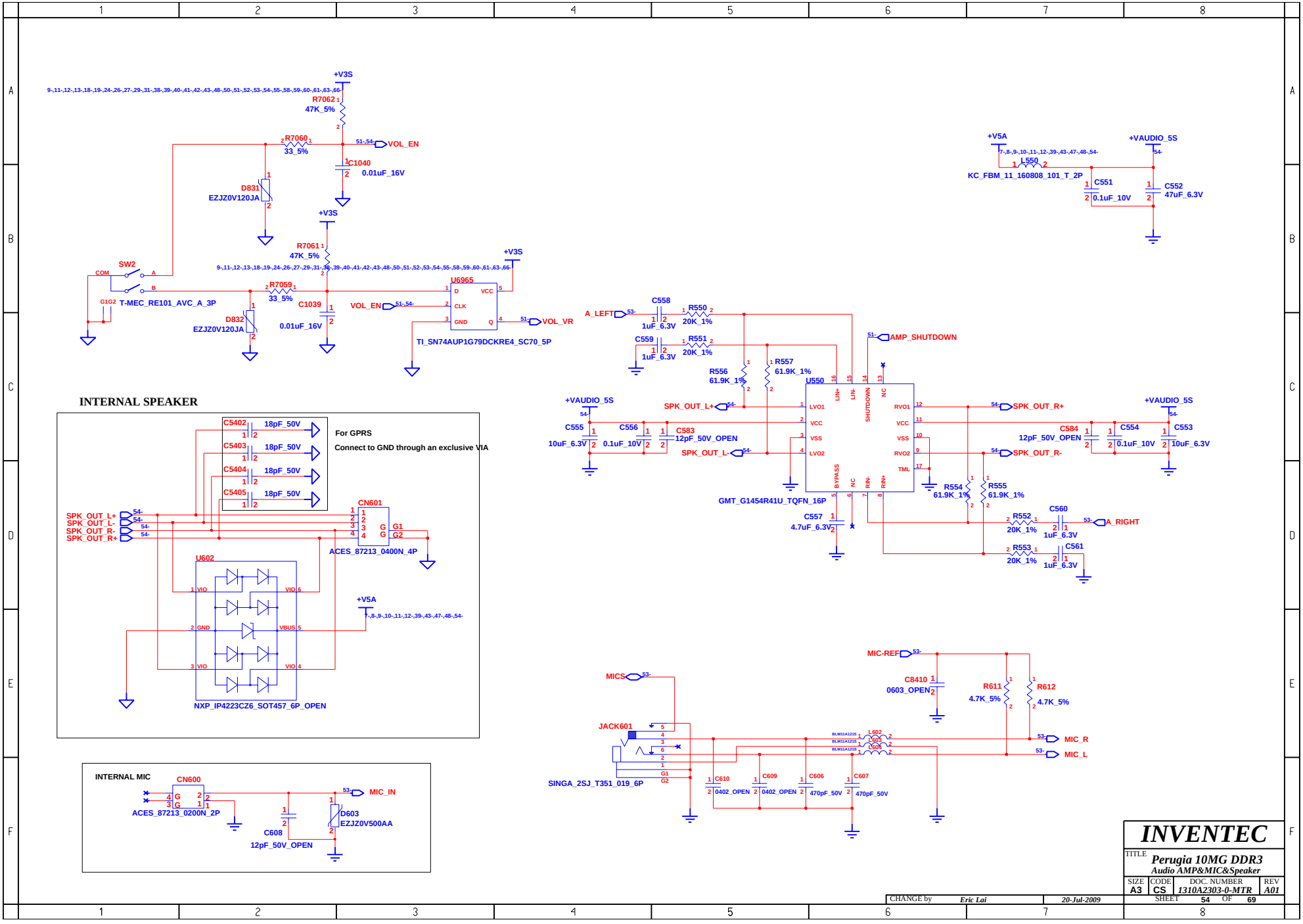
+V3S
R7062
47K_5%
R7060
33_5%
VOL_EN
C1040
0.01uF_16V
D831
EZJZ0V120JA
R7061
47K_5%
SW2
COM
A
B
G1G2
T-MEC_RE101_AVC_A_3P
R7059
33_5%
C1039
0.01uF_16V
D832
EZJZ0V120JA
U6965
D
CLK
GND
VCC
Q
VOL_VR
TI_SN74AUP1G79DCKRE4_SC70_5P
INTERNAL SPEAKER
C5402
C5403
C5404
C5405
18pF_50V
For GPRS
Connect to GND through an exclusive VIA
SPK_OUT_L+
SPK_OUT_L-
SPK_OUT_R-
SPK_OUT_R+
CN601
ACES_87213_0400N_4P
U602
VIO
GND
VBUS
NXP_IP4223CZ6_SOT457_6P_OPEN
+V5A
INTERNAL MIC
CN600
ACES_87213_0200N_2P
MIC_IN
C608
12pF_50V_OPEN
D603
EZJZ0V500AA
A_LEFT
C558
1uF_6.3V
R550
20K_1%
C559
1uF_6.3V
R551
20K_1%
R556
61.9K_1%
R557
61.9K_1%
U550
LIN+
LIN-
SHUTDOWN
NC
LVO1
VCC
VSS
LVO2
BYPASS
RIN-
RIN+
RVO1
RVO2
TML
AMP_SHUTDOWN
+VAUDIO_5S
C555
10uF_6.3V
C556
0.1uF_10V
C583
12pF_50V_OPEN
SPK_OUT_L+
SPK_OUT_L-
SPK_OUT_R+
SPK_OUT_R-
C584
12pF_50V_OPEN
C554
0.1uF_10V
C553
10uF_6.3V
GMT_G1454R41U_TQFN_16P
C557
4.7uF_6.3V
R554
61.9K_1%
R555
61.9K_1%
R552
20K_1%
C560
1uF_6.3V
A_RIGHT
R553
20K_1%
C561
1uF_6.3V
+V5A
L550
KC_FBM_11_160808_101_T_2P
C551
0.1uF_10V
C552
47uF_6.3V
MIC-REF
C8410
0603_OPEN
R611
4.7K_5%
R612
4.7K_5%
MICS
JACK601
SINGA_2SJ_T351_019_6P
L602
L603
L604
BLM11A121S
C610
0402_OPEN
C609
0402_OPEN
C606
470pF_50V
C607
470pF_50V
MIC_R
MIC_L
INVENTEC
TITLE
Perugia 10MG DDR3
Audio AMP&MIC&Speaker
SIZE A3
CODE CS
DOC. NUMBER 1310A2303-0-MTR
REV A01
CHANGE by Eric Lai
20-Jul-2009
SHEET 54 OF 69

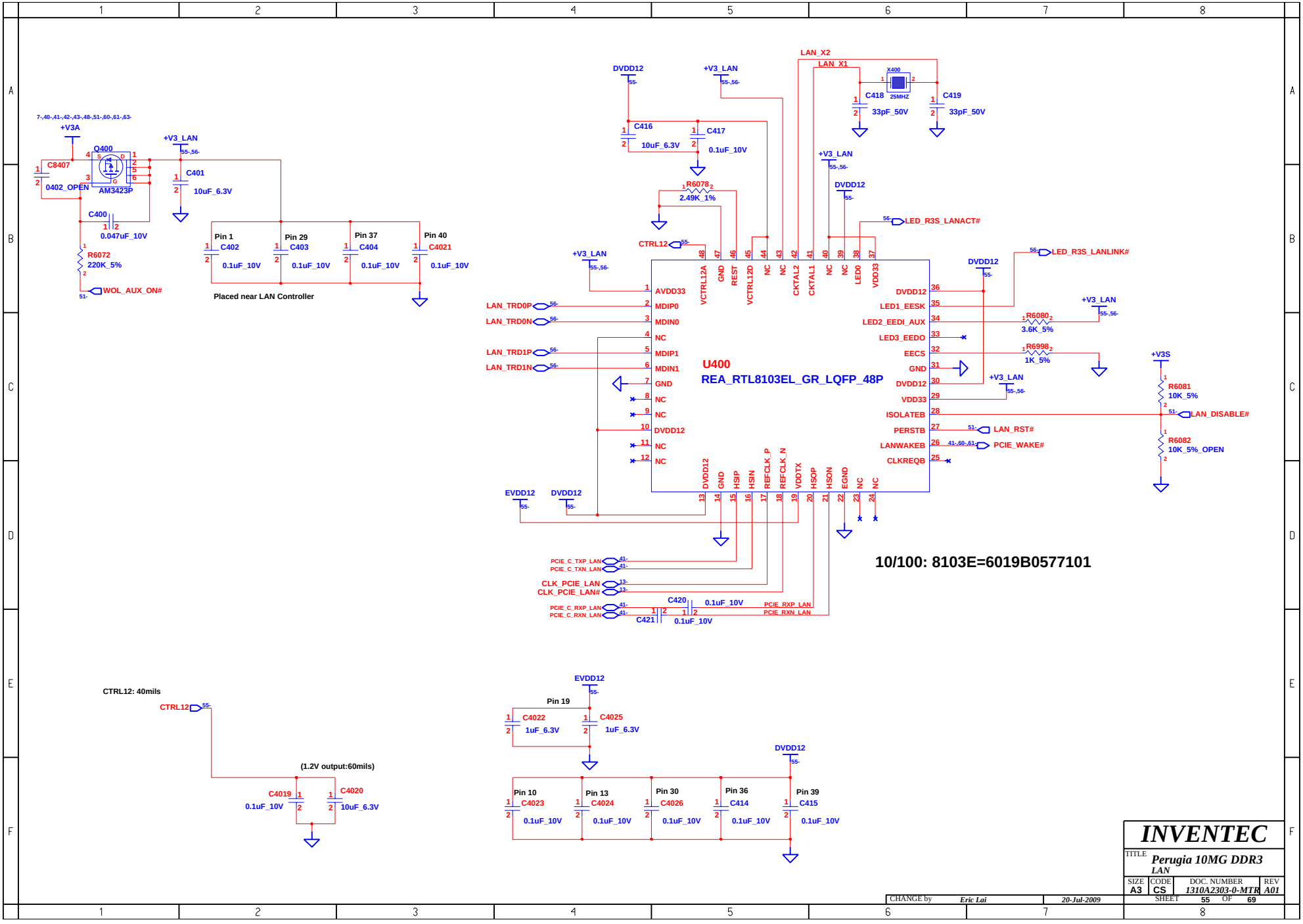
7-,40-,41-,42-,43-,48-,51-,60-,61-,63-
+V3A
Q400
AM3423P
C8407
0402_OPEN
C400
0.047uF_10V
R6072
220K_5%
WOL_AUX_ON#
+V3_LAN
C401
10uF_6.3V
Pin 1
C402
0.1uF_10V
Pin 29
C403
0.1uF_10V
Pin 37
C404
0.1uF_10V
Pin 40
C4021
0.1uF_10V
Placed near LAN Controller
DVDD12
+V3_LAN
C416
10uF_6.3V
C417
0.1uF_10V
R6078
2.49K_1%
CTRL12
LAN_X2
LAN_X1
X400
25MHZ
C418
33pF_50V
C419
33pF_50V
LED_R3S_LANACT#
LED_R3S_LANLINK#
LAN_TRD0P
LAN_TRD0N
LAN_TRD1P
LAN_TRD1N
U400
REA_RTL8103EL_GR_LQFP_48P
AVDD33
MDIP0
MDIN0
NC
MDIP1
MDIN1
GND
DVDD12
VCTRL12A
REST
VCTRL12D
CKTAL2
CKTAL1
LED0
VDD33
LED1_EESK
LED2_EEDI_AUX
LED3_EEDO
EECS
VDD33
ISOLATEB
PERSTB
LANWAKEB
CLKREQB
R6080
3.6K_5%
R6998
1K_5%
+V3S
R6081
10K_5%
R6082
10K_5%_OPEN
LAN_DISABLE#
LAN_RST#
PCIE_WAKE#
EVDD12
HSIP
HSIN
REFCLK_P
REFCLK_N
VDDTX
HSOP
HSON
EGND
PCIE_C_TXP_LAN
PCIE_C_TXN_LAN
CLK_PCIE_LAN
CLK_PCIE_LAN#
PCIE_C_RXP_LAN
PCIE_C_RXN_LAN
PCIE_RXP_LAN
PCIE_RXN_LAN
C420
0.1uF_10V
C421
0.1uF_10V
10/100: 8103E=6019B0577101
CTRL12: 40mils
(1.2V output:60mils)
C4019
0.1uF_10V
C4020
10uF_6.3V
Pin 19
C4022
1uF_6.3V
C4025
1uF_6.3V
Pin 10
C4023
0.1uF_10V
Pin 13
C4024
0.1uF_10V
Pin 30
C4026
0.1uF_10V
Pin 36
C414
0.1uF_10V
Pin 39
C415
0.1uF_10V
INVENTEC
TITLE
Perugia 10MG DDR3
LAN
SIZE A3
CODE CS
DOC. NUMBER 1310A2303-0-MTR
REV A01
SHEET 55 OF 69
CHANGE by Eric Lai
20-Jul-2009

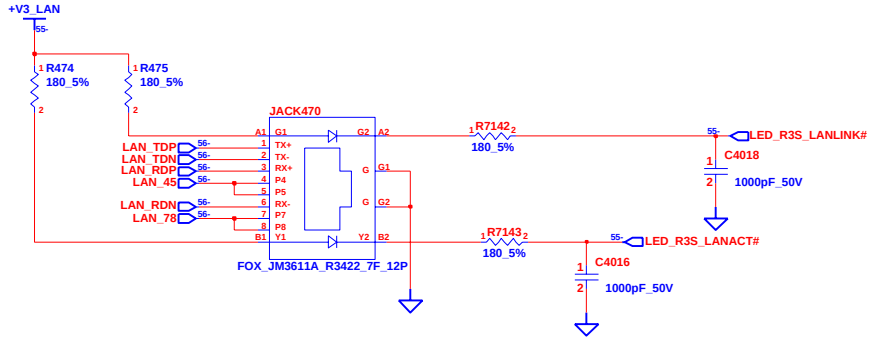

LEDS1-0	00	* 01	10	11
LED0	Tx/Rx	Tx/Rx	Tx	LINK10 ACT
LED1	LINK100	LINK 10/100/1000	LINK	LINK100 ACT
LED2	LINK10	LINK10/100	Rx	ULL
LED3	LINK1000	LINK1000	ULL	LINK1000 ACT

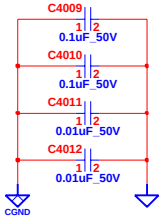

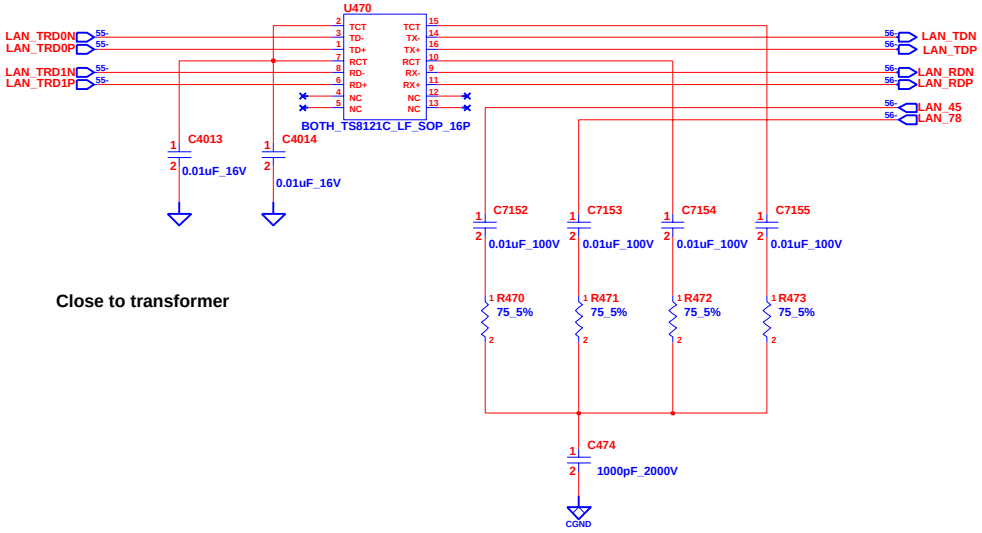

Close to transformer

CHANGE by	Eric Lai	20-Jul-2009

INVENTEC

TITLE *Perugia 10MG DDR3 Transformer&RJ45*

SIZE	CODE	DOC. NUMBER	REV
A3	CS	1310A2303-0-MTR	A01

SHEET 56 OF 69

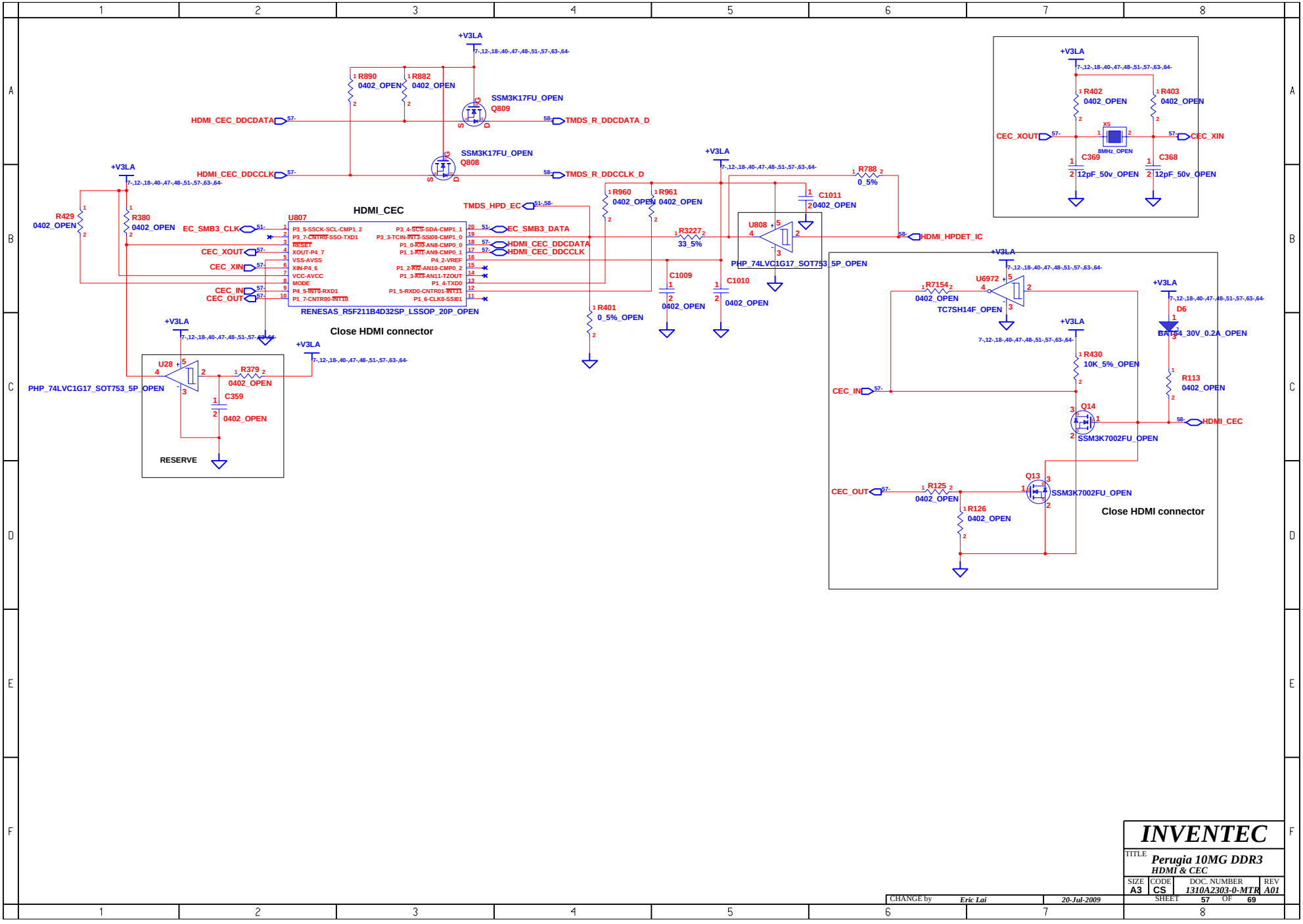

INVENTEC			
TITLE: Perugia 10MG DDR3 HDMI & CEC			
SIZE: A3	CODE: CS	DOC. NUMBER: 1310A2303-0-MTR	REV: A01
CHANGE by: Eric Lai	20-Jul-2009	SHEET 57 OF 69	

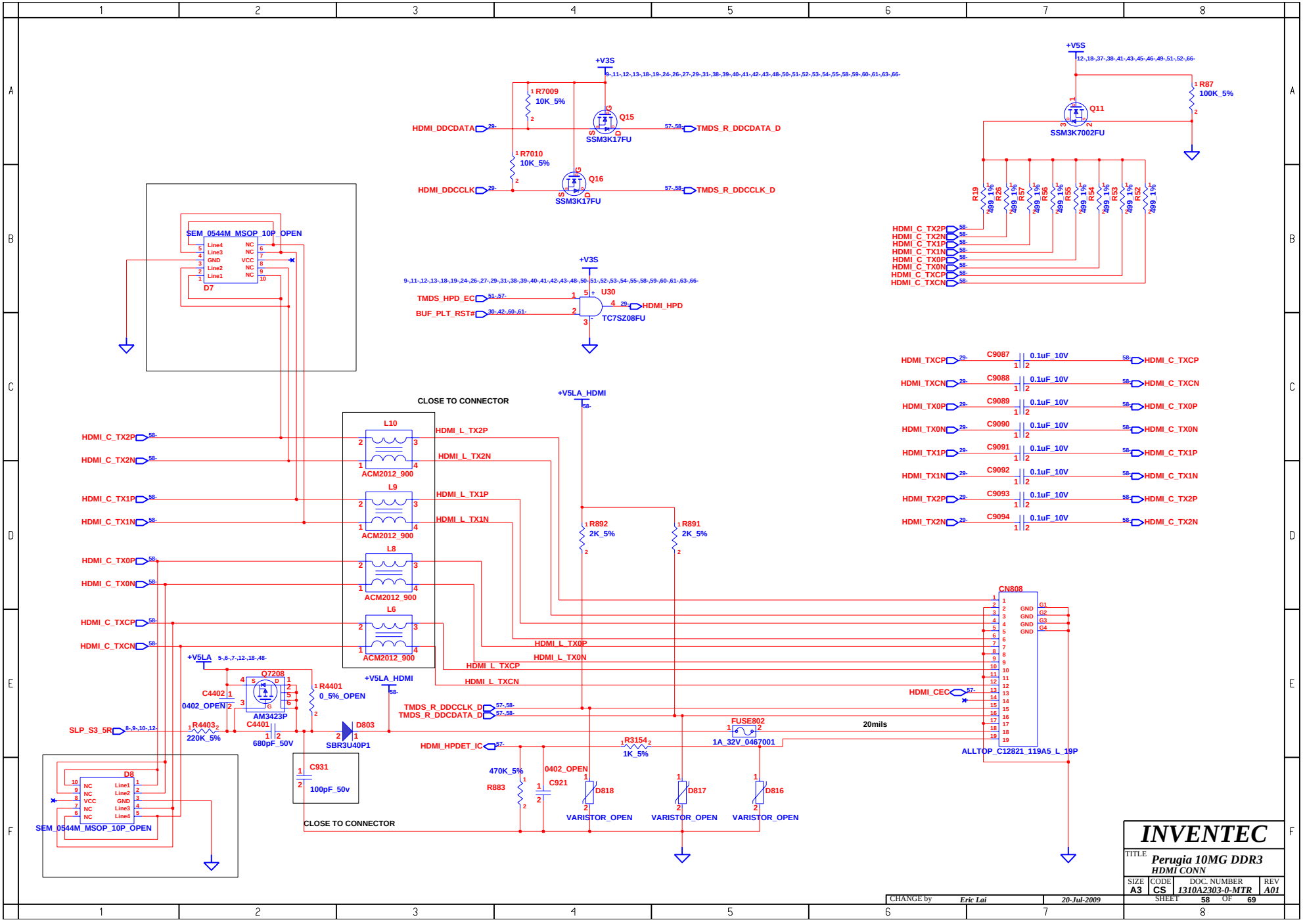
+V3S
R7009
10K_5%
Q15
SSM3K17FU
HDMI_DDCDATA
TMDS_R_DDCDATA_D
R7010
10K_5%
Q16
SSM3K17FU
HDMI_DDCCLK
TMDS_R_DDCCLK_D
+V5S
R87
100K_5%
Q11
SSM3K7002FU
R19 499_1%
R26 499_1%
R57 499_1%
R56 499_1%
R55 499_1%
R54 499_1%
R53 499_1%
R52 499_1%
HDMI_C_TX2P
HDMI_C_TX2N
HDMI_C_TX1P
HDMI_C_TX1N
HDMI_C_TX0P
HDMI_C_TX0N
HDMI_C_TXCP
HDMI_C_TXCN
SEM_0544M_MSOP_10P_OPEN
D7
+V3S
TMDS_HPD_EC
BUF_PLT_RST#
U30
TC7SZ08FU
HDMI_HPD
HDMI_TXCP C9087 0.1uF_10V HDMI_C_TXCP
HDMI_TXCN C9088 0.1uF_10V HDMI_C_TXCN
HDMI_TX0P C9089 0.1uF_10V HDMI_C_TX0P
HDMI_TX0N C9090 0.1uF_10V HDMI_C_TX0N
HDMI_TX1P C9091 0.1uF_10V HDMI_C_TX1P
HDMI_TX1N C9092 0.1uF_10V HDMI_C_TX1N
HDMI_TX2P C9093 0.1uF_10V HDMI_C_TX2P
HDMI_TX2N C9094 0.1uF_10V HDMI_C_TX2N
CLOSE TO CONNECTOR
+V5LA_HDMI
L10
ACM2012_900
L9
ACM2012_900
L8
ACM2012_900
L6
ACM2012_900
HDMI_L_TX2P
HDMI_L_TX2N
HDMI_L_TX1P
HDMI_L_TX1N
HDMI_L_TX0P
HDMI_L_TX0N
HDMI_L_TXCP
HDMI_L_TXCN
R892 2K_5%
R891 2K_5%
CN808
ALLTOP_C12821_119A5_L_19P
HDMI_CEC
20mils
+V5LA
Q7208
AM3423P
C4402
0402_OPEN
R4401
0_5%_OPEN
C4401
680pF_50V
D803
SBR3U40P1
SLP_S3_5R
R4403
220K_5%
TMDS_R_DDCCLK_D
TMDS_R_DDCDATA_D
FUSE802
1A_32V_0467001
HDMI_HPDET_IC
R3154
1K_5%
470K_5%
R883
0402_OPEN
C921
D818
VARISTOR_OPEN
D817
VARISTOR_OPEN
D816
VARISTOR_OPEN
C931
100pF_50v
CLOSE TO CONNECTOR
D8
SEM_0544M_MSOP_10P_OPEN
INVENTEC
TITLE
Perugia 10MG DDR3
HDMI CONN
SIZE A3
CODE CS
DOC. NUMBER 1310A2303-0-MTR
REV A01
SHEET 58 OF 69
CHANGE by Eric Lai
20-Jul-2009

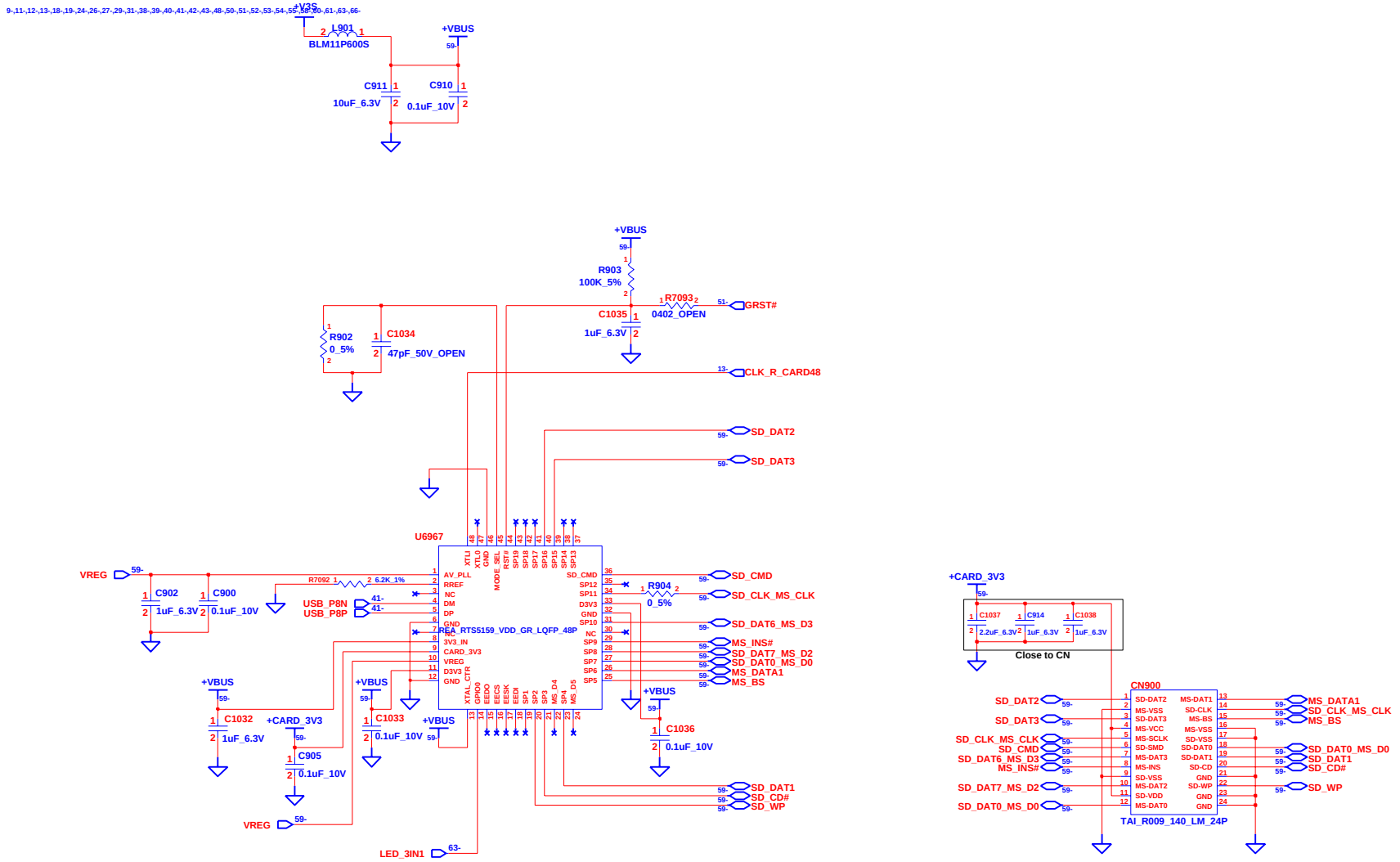

INVENTEC

TITLE
Perugia 10MG DDR3
USB Card Reader

SIZE	CODE	DOC. NUMBER	REV
A3	CS	1310A2303-0-MTR	A01

CHANGE by *Eric Lai* *20-Jul-2009*

SHEET 59 OF 69

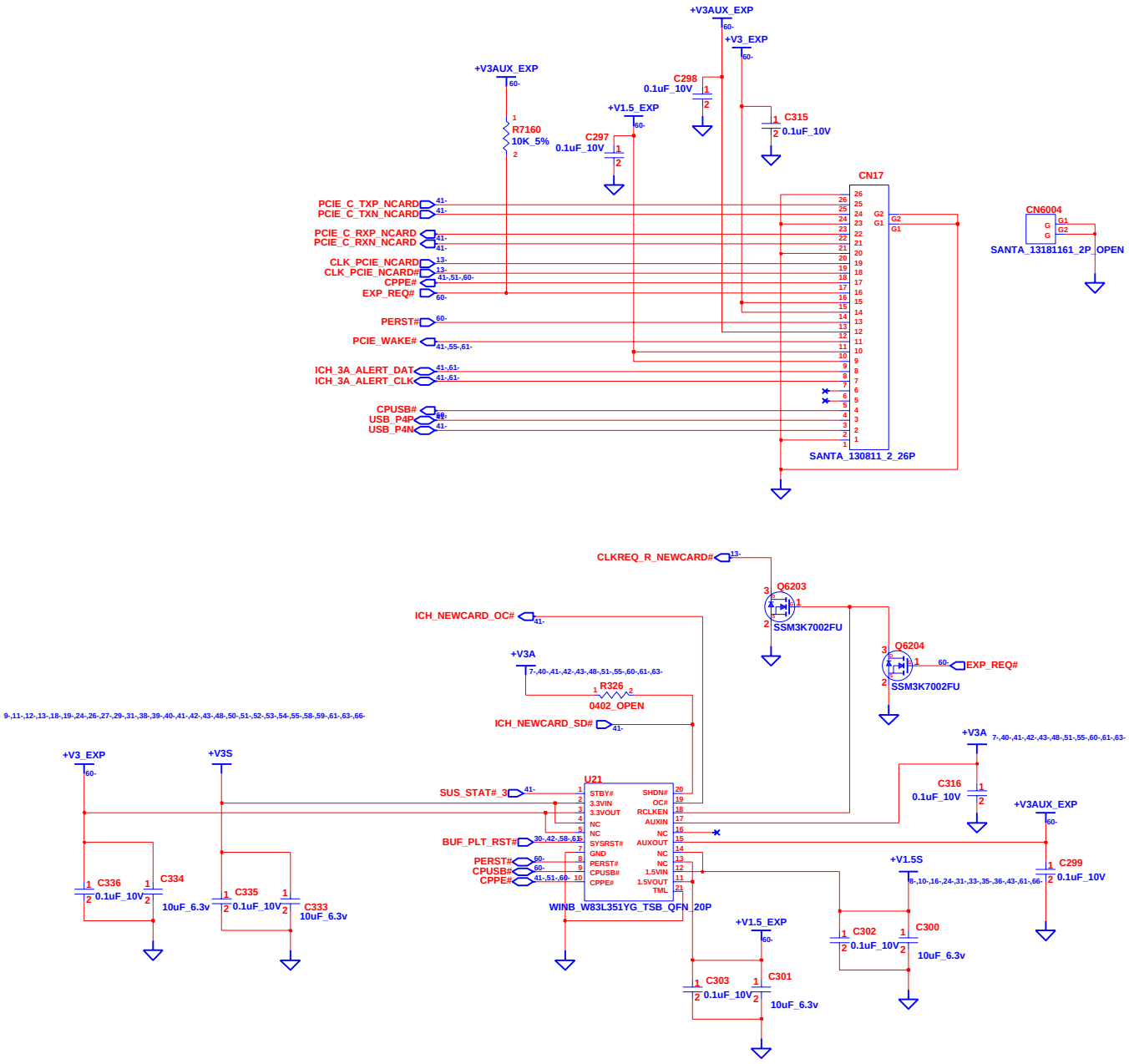

INVENTEC

TITLE *Perugia 10MG DDR3*
Express Card CONN

SIZE	CODE	DOC. NUMBER	REV
A3	CS	1310A2303-0-MTR	A01

SHEET 60 OF 69

CHANGE by *Eric Lai* *20-Jul-2009*

Wireless & Debug card

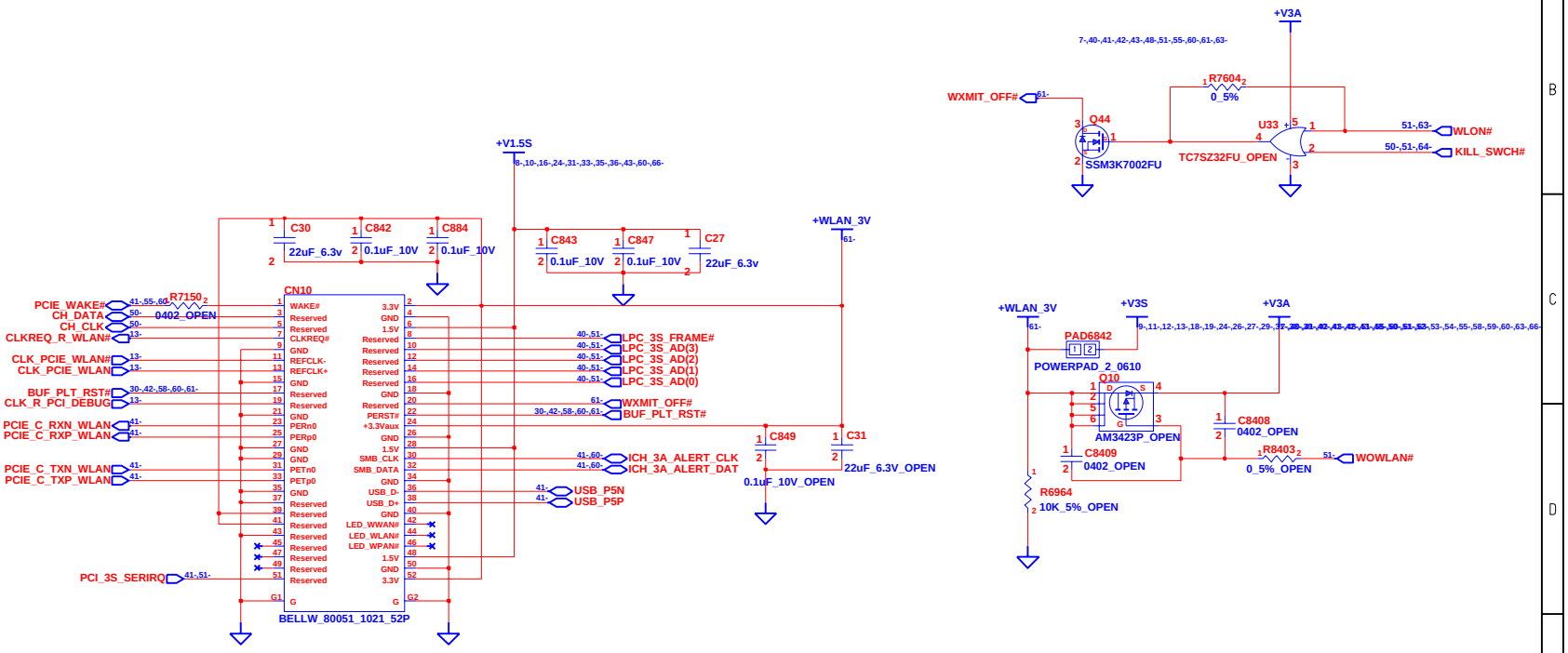

CHANGE by	Eric Lai	20-Jul-2009	

INVENTEC

TITLE: *Perugia 10MG DDR3*
Wireless & debug card

SIZE	CODE	DOC. NUMBER	REV
A3	CS	1310A2303-0-MTR	A01

SHEET 61 OF 69

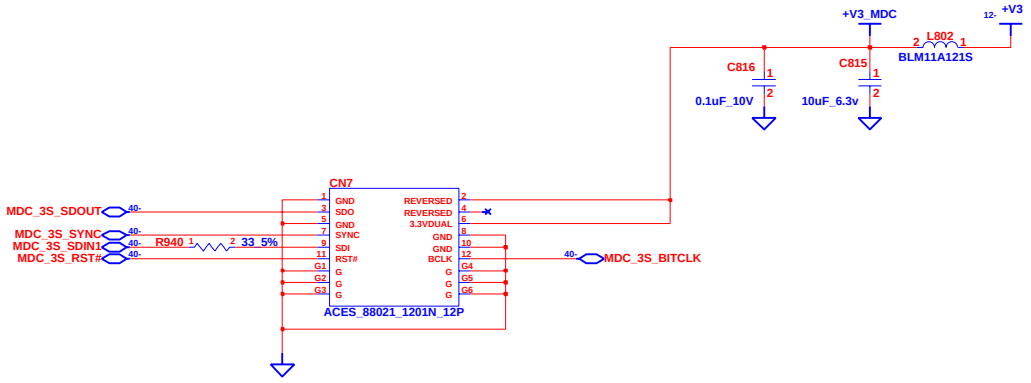

CHANGE by	Eric Lai	20-Jul-2009	

INVENTEC

TITLE **Perugia 10MG DDR3**
MDC CONN

SIZE	CODE	DOC. NUMBER	REV
A3	CS	1310A2303-0-MTR	A01

SHEET 62 OF 69

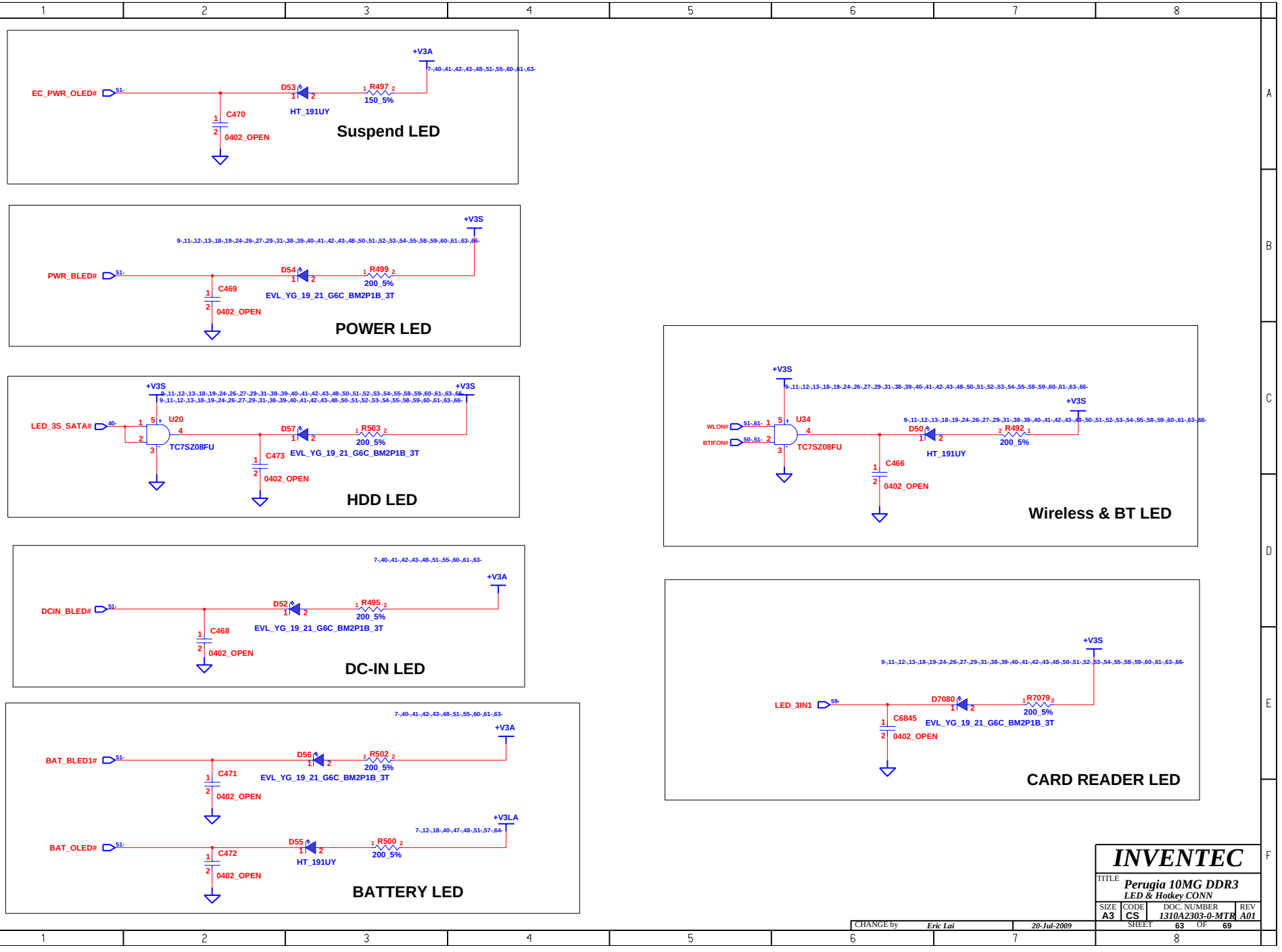
Suspend LED
EC_PWR_OLED#
+V3A
D53
HT_191UY
R497
150_5%
C470
0402_OPEN
POWER LED
PWR_BLED#
+V3S
D54
EVL_YG_19_21_G6C_BM2P1B_3T
R499
200_5%
C469
0402_OPEN
HDD LED
LED_3S_SATA#
U20
TC7SZ08FU
D57
EVL_YG_19_21_G6C_BM2P1B_3T
R503
200_5%
C473
0402_OPEN
DC-IN LED
DCIN_BLED#
D52
EVL_YG_19_21_G6C_BM2P1B_3T
R495
200_5%
C468
0402_OPEN
BATTERY LED
BAT_BLED1#
D56
EVL_YG_19_21_G6C_BM2P1B_3T
R502
200_5%
C471
0402_OPEN
BAT_OLED#
+V3LA
D55
HT_191UY
R500
200_5%
C472
0402_OPEN
Wireless & BT LED
WLON#
BTIFON#
U34
TC7SZ08FU
D50
HT_191UY
R492
200_5%
C466
0402_OPEN
CARD READER LED
LED_3IN1
D7080
EVL_YG_19_21_G6C_BM2P1B_3T
R7079
200_5%
C6845
0402_OPEN
INVENTEC
TITLE
Perugia 10MG DDR3
LED & Hotkey CONN
SIZE A3
CODE CS
DOC. NUMBER 1310A2303-0-MTR
REV A01
SHEET 63 OF 69
CHANGE by Eric Lai
20-Jul-2009

KILL SWITCH

WLAN ON: KILL_SWCH# -> Low
WLAN OFF: KILL_SWCH# -> High

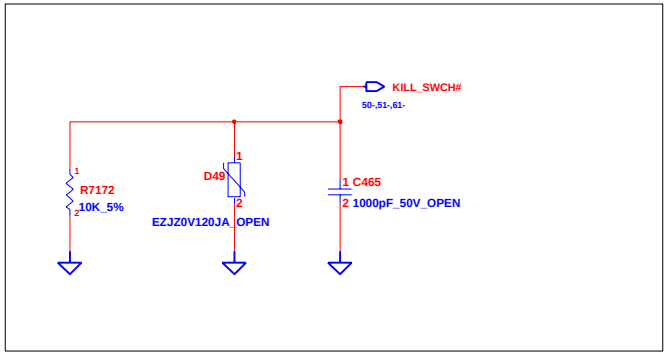

HALL SENSOR

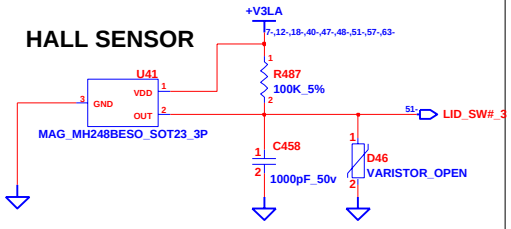

CHANGE by	Eric Lai	20-Jul-2009	

INVENTEC

TITLE *Perugia 10MG DDR3*
Kill Swich & Hall Sensor

SIZE	CODE	DOC. NUMBER	REV
A3	CS	1310A2303-0-MTR	A01

SHEET 64 OF 69

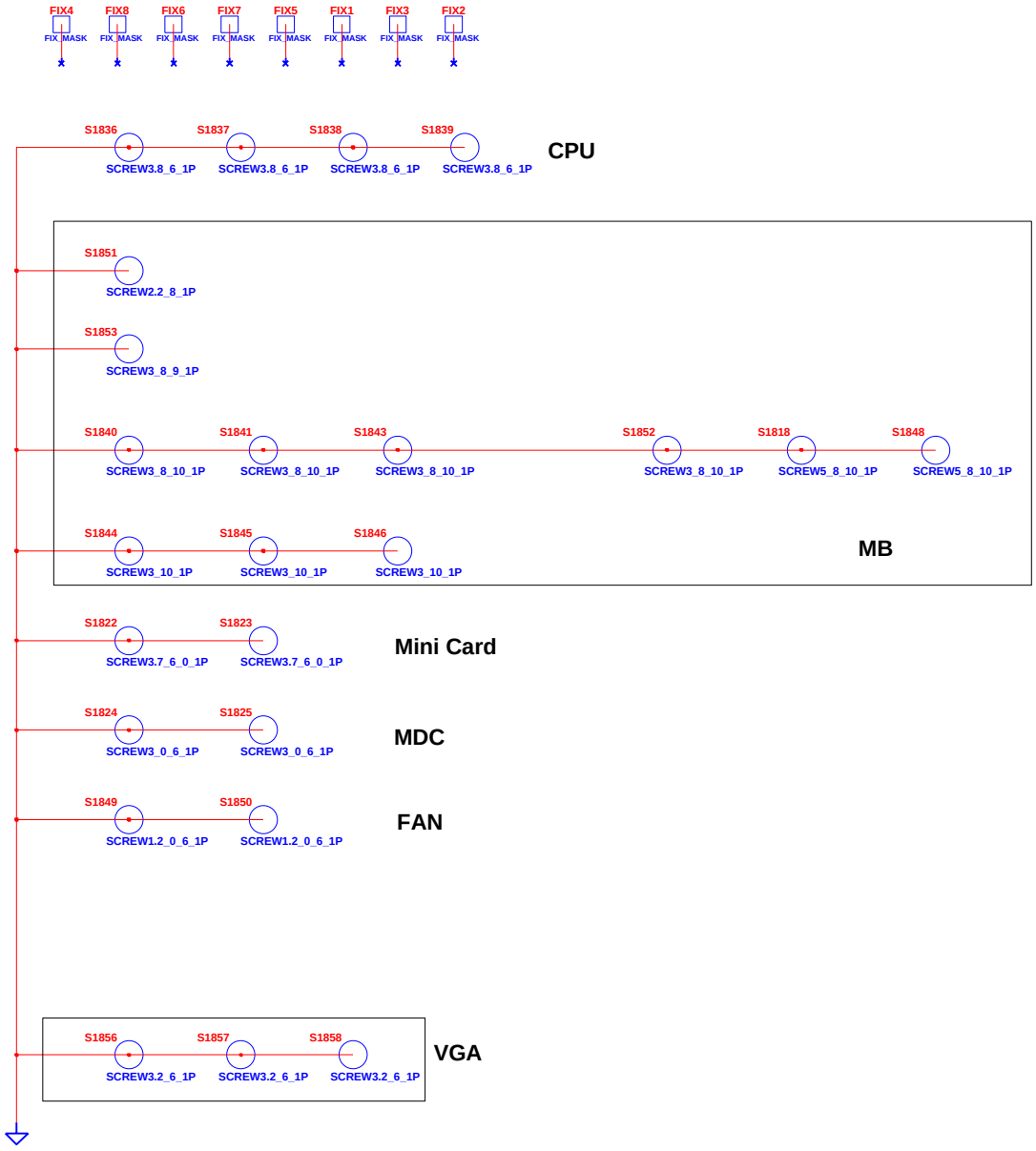

INVENTEC			
TITLE	*Perugia 10MG DDR3 Screw*		
SIZE A3	CODE CS	DOC. NUMBER *1310A2303-0-MTR*	REV *A01*
CHANGE by *Eric Lai*	*20-Jul-2009*	SHEET 65 OF 69	

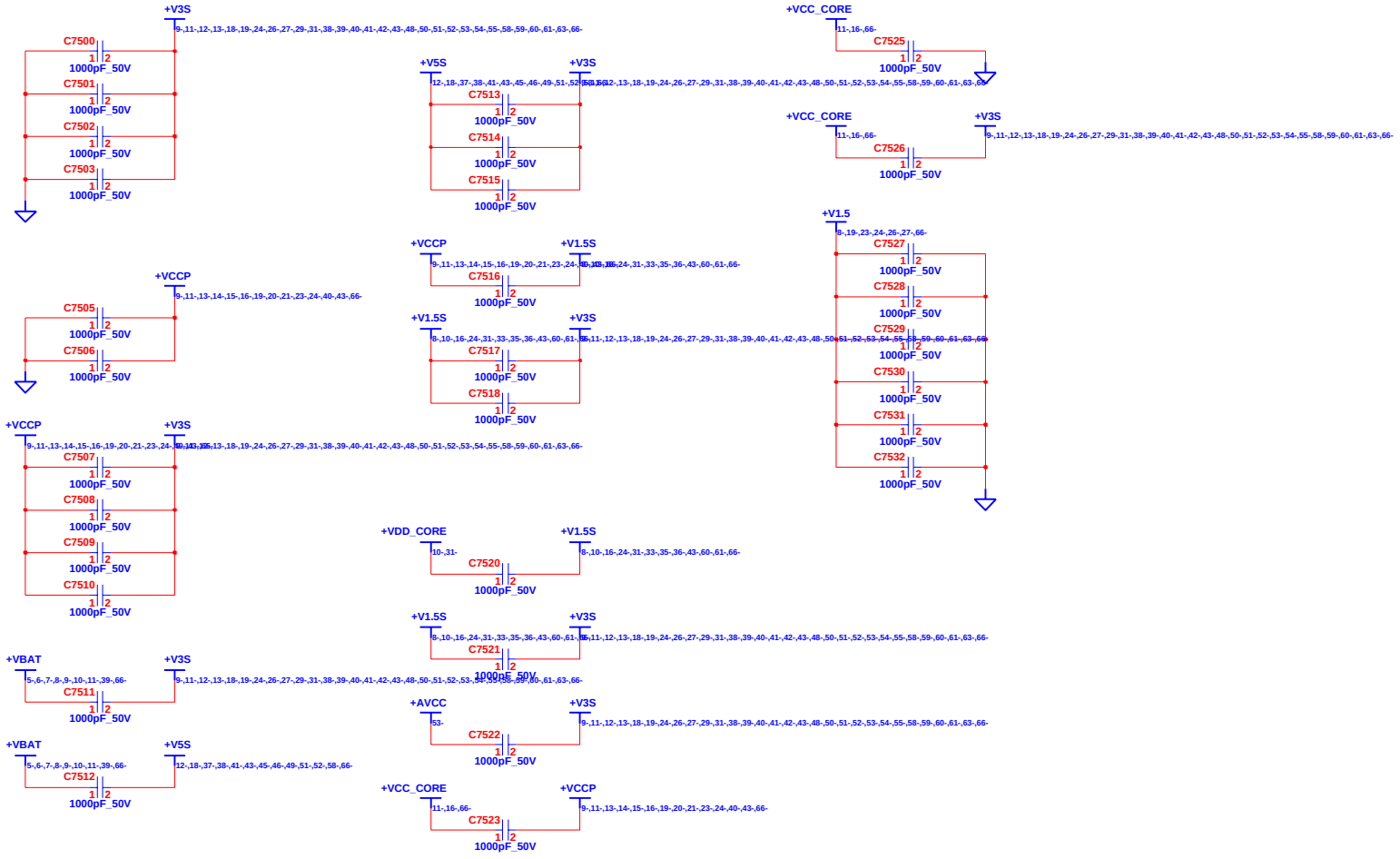

INVENTEC

TITLE *Perugia 10MG DDR3 EMI*

SIZE	CODE	DOC. NUMBER	REV
A3	CS	1310A2303-0-MTR	A01

SHEET 66 OF 69

CHANGE by *Eric Lai* *20-Jul-2009*

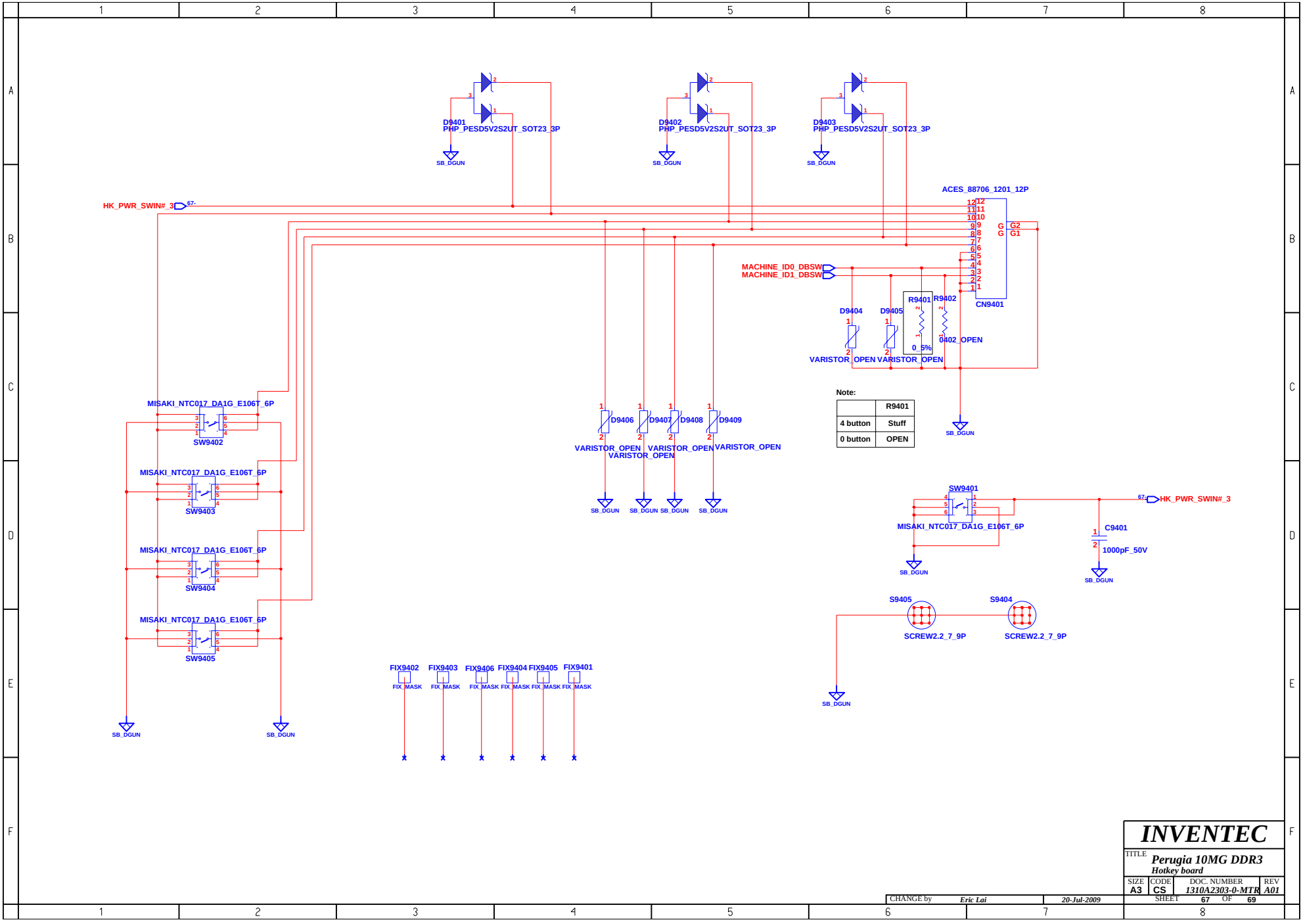

INVENTEC

TITLE **Perugia 10MG DDR3**
Hotkey board

SIZE	CODE	DOC. NUMBER	REV
A3	CS	1310A2303-0-MTR	A01

SHEET 67 OF 69

CHANGE by Eric Lai 20-Jul-2009

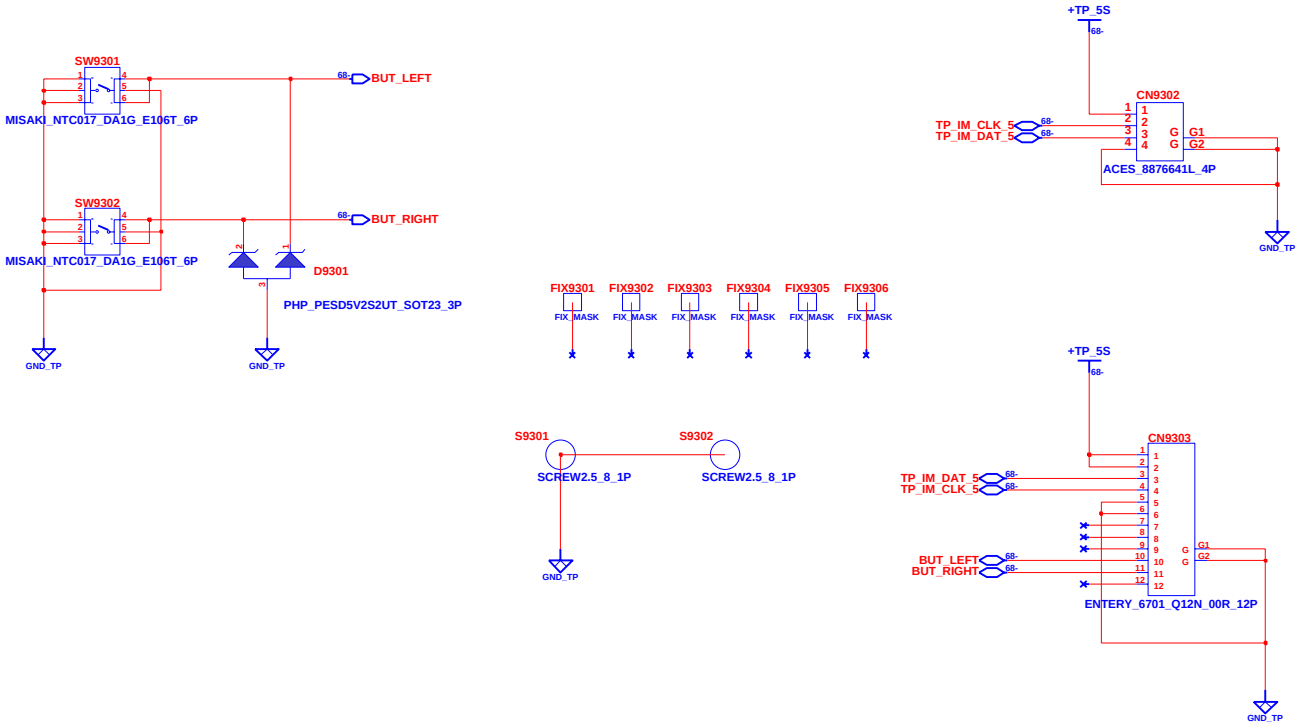

INVENTEC

TITLE **Perugia 10MG DDR3**
Touch pad board

SIZE	CODE	DOC. NUMBER	REV
A3	CS	1310A2303-0-MTR	A01

SHEET 68 OF 69

CHANGE by	Eric Lai	20-Jul-2009

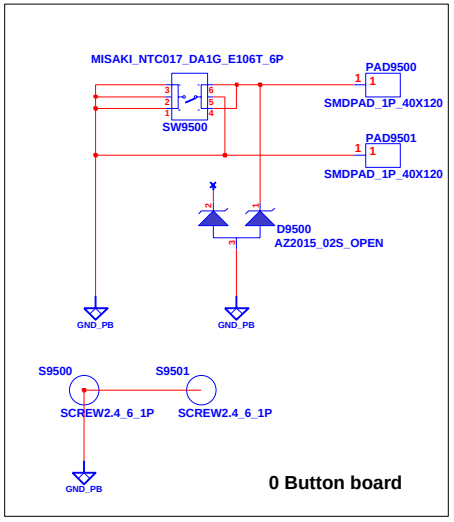

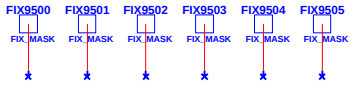

CHANGE by	Eric Lai	20-Jul-2009	

INVENTEC

TITLE *Perugia 10MG DDR3*
Touch pad board

SIZE	CODE	DOC. NUMBER	REV
A3	CS	1310A2303-0-MTR	A01

SHEET 69 OF 69