91修 中华维修网 www.91xiu.com 91修--HTTP://WWW.91XIU.COM

# DDD UMA

## SI Build(Final)

2007.03.30

| DATE | CHANGE NO. | REV |
|---|---|---|
| | | |

| | EE | DATE | POWER | DATE |
|---|---|---|---|---|
| DRAWER | | | | |
| DESIGN | | | | |
| CHECK | | | | |
| RESPONSIBLE | | | | |

SIZE = 3 VER :

FILE NAME : XXXX-XXXXXX-XX

P/N XXXXXXXXXXXX

INVENTEC

TITLE DDD UMA

| SIZE | CODE | DOC. NUMBER | REV |
|---|---|---|---|
| A3 | CS | Model_No | AX1 |

SHEET 1 OF 48

# TABLE OF CONTENTS


PAGE
5- DC& BATTERY CHARGER
6- SELECT & BATTERY CONN
7- SYSTEM POWER(3V/5V)
8- SYSTEM POWER(+V1.8/+V1.25S)
9- SYSTEM POWER(+VGFX/+VCCP)
10- SYSTEM POWER(+V1.5S)
11- CPU POWER(VCC_CORE)
12- DDR TERMINATION VOLTAGE
13- POWER(SLEEP)
14- POWER(SEQUENCE)

PAGE
15- CLOCK_GENERATOR
16- PENRYN-1
17- PENRYN-2
18- PENRYN-3
19- THERMAL&FAN CONTROLLER
20- Crestline-1
21- Crestline-2
22- Crestline-3
23- Crestline-4
24- Crestline-5
25- Crestline-6
26- DDR2-DIMM0
27- DDR2-DIMM1
28- DDR2-DAMPING
29- VGA CONN
30- LCM CONN
31- ICH8-1
32- ICH8-2
33- ICH8-3
34- ICH8-4
35- ICH8-5

PAGE
36- SYSTEM BIOS&ODD EXTEND/B
37- HDD&ODD CONN
38- USB CONN
39- KBC
40- KB&TP CONN
41- AUDIO CODEC
42- MDC CONN & AUDIO JACK
43- NIC 10/100- CONTROLLER
44- NIC 10/100- RJ45 CONN
45- MINICARD & BT CONN
46- NEW CARD & SD/MMC
47- LED & BUTTON
48- SCREW HOLE

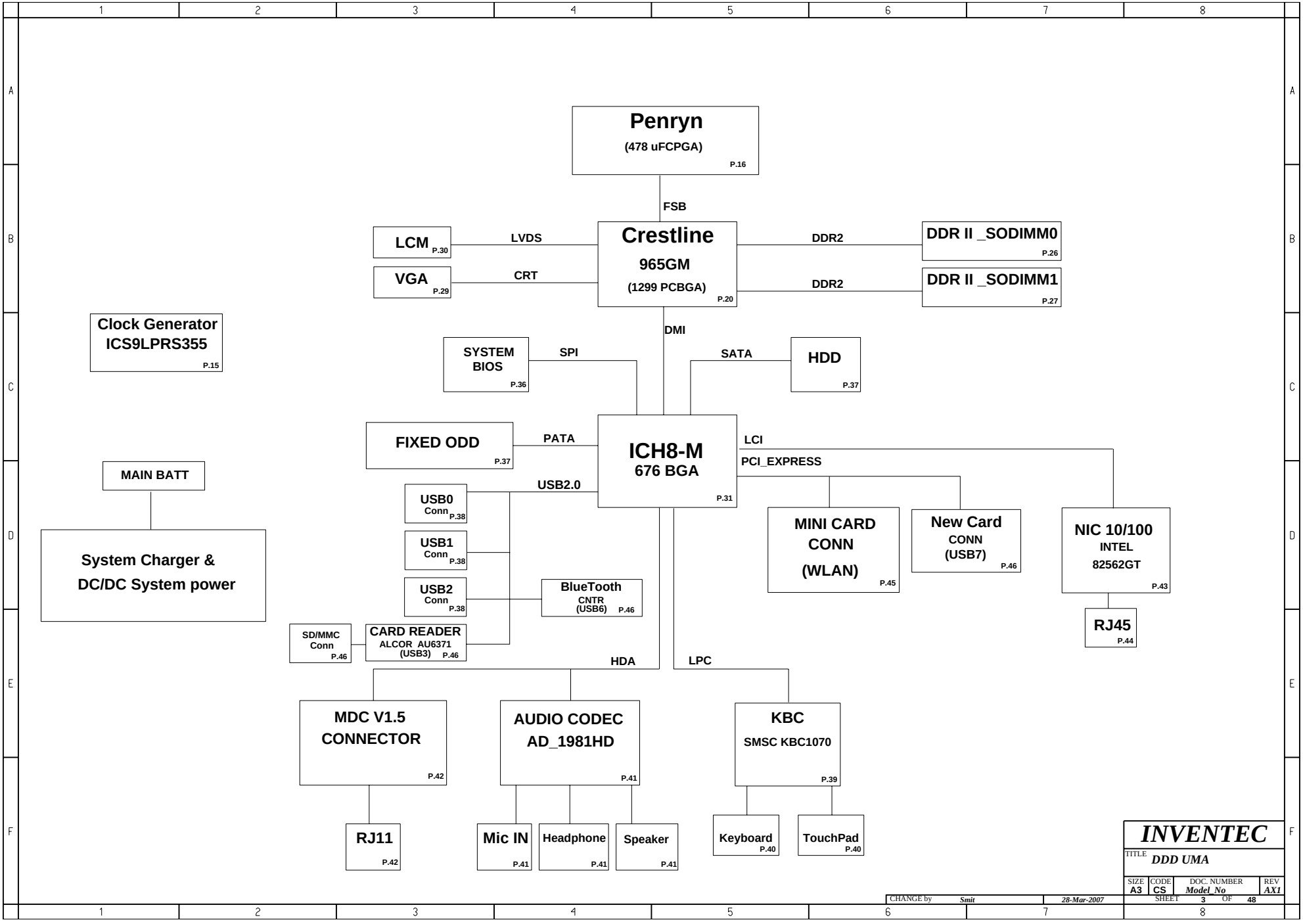
Penryn
(478 uFCPGA)
P.16
FSB
Crestline
965GM
(1299 PCBGA)
P.20
LCM P.30
LVDS
VGA P.29
CRT
DDR2
DDR II _SODIMM0
P.26
DDR2
DDR II _SODIMM1
P.27
Clock Generator
ICS9LPRS355
P.15
DMI
SYSTEM BIOS
P.36
SPI
SATA
HDD
P.37
FIXED ODD
P.37
PATA
ICH8-M
676 BGA
P.31
LCI
PCI_EXPRESS
MAIN BATT
System Charger &
DC/DC System power
USB2.0
USB0 Conn P.38
USB1 Conn P.38
USB2 Conn P.38
BlueTooth CNTR (USB6) P.46
SD/MMC Conn P.46
CARD READER
ALCOR AU6371
(USB3) P.46
MINI CARD CONN
(WLAN)
P.45
New Card
CONN
(USB7)
P.46
NIC 10/100
INTEL
82562GT
P.43
RJ45
P.44
HDA
LPC
MDC V1.5
CONNECTOR
P.42
AUDIO CODEC
AD_1981HD
P.41
KBC
SMSC KBC1070
P.39
RJ11
P.42
Mic IN
P.41
Headphone
P.41
Speaker
P.41
Keyboard
P.40
TouchPad
P.40
INVENTEC
TITLE DDD UMA
SIZE A3
CODE CS
DOC. NUMBER Model_No
REV AX1
SHEET 3 OF 48
CHANGE by Smit
28-Mar-2007

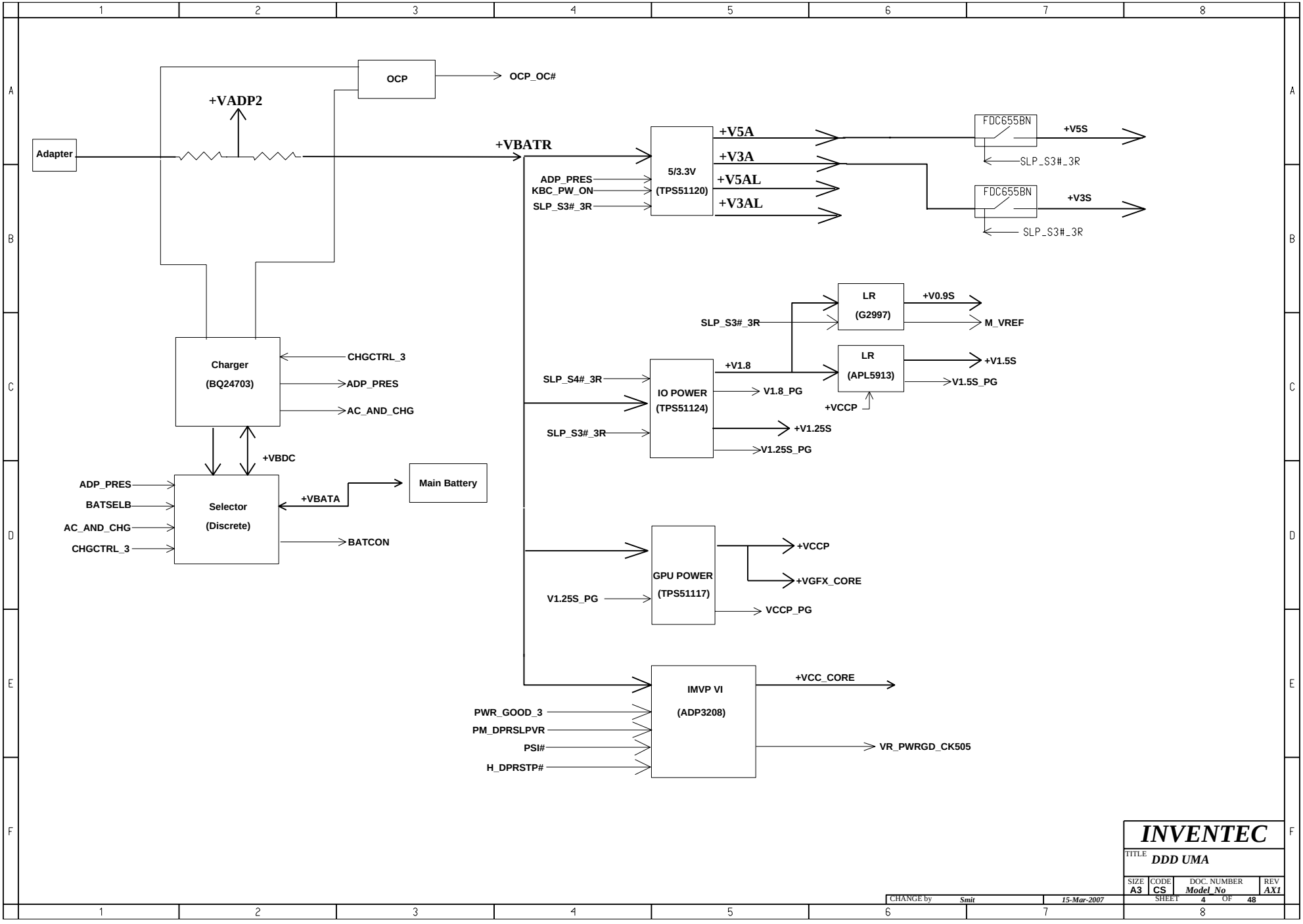


**INVENTEC**

TITLE *DDD UMA*

| SIZE | CODE | DOC. NUMBER | REV |
|---|---|---|---|
| A3 | CS | *Model_No* | *AX1* |

CHANGE by *Smit* *15-Mar-2007*

SHEET 4 OF 48

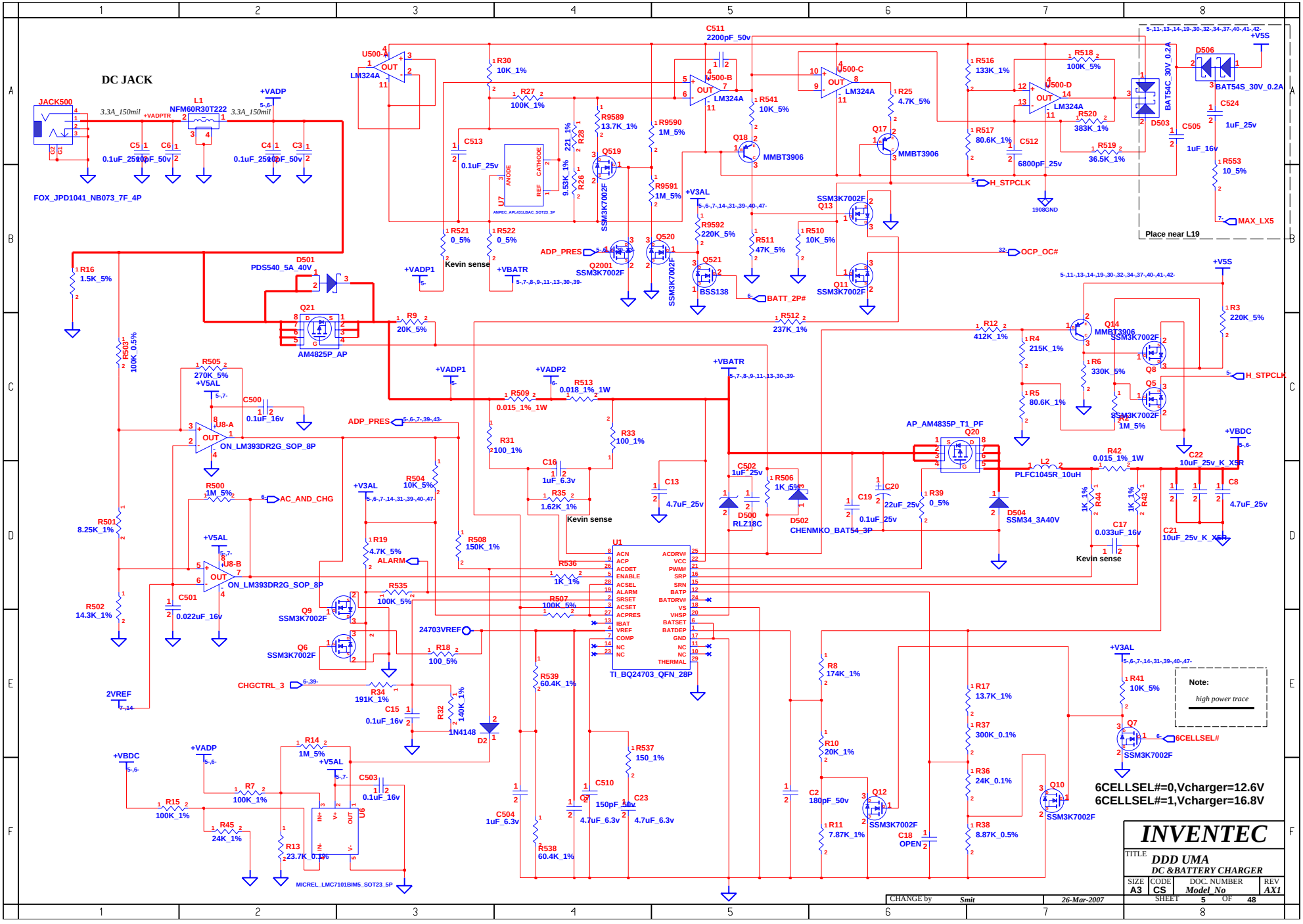
DC JACK
JACK500
FOX_JPD1041_NB073_7F_4P
L1
NFM60R30T222
3.3A_150mil
+VADP
+VADPTR
C5 0.1uF_25v
C6 100pF_50v
C4 0.1uF_25v
C3 100pF_50v
U500-A LM324A
R30 10K_1%
R27 100K_1%
C513 0.1uF_25v
U7 ANPEC_APL431LBAC_SOT23_3P
R28 221_1%
R26 9.53K_1%
R9589 13.7K_1%
R9590 1M_5%
R9591 1M_5%
Q519 SSM3K7002F
R521 0_5%
R522 0_5%
Kevin sense
+VADP1
+VBATR
ADP_PRES
Q2001 SSM3K7002F
Q520 SSM3K7002F
Q521 BSS138
BATT_2P#
+V3AL
R9592 220K_5%
C511 2200pF_50v
U500-B LM324A
R541 10K_5%
Q18 MMBT3906
U500-C LM324A
R25 4.7K_5%
Q17 MMBT3906
R511 47K_5%
R510 10K_5%
SSM3K7002F Q13
Q11 SSM3K7002F
OCP_OC#
R516 133K_1%
R517 80.6K_1%
C512 6800pF_25v
1908GND
H_STPCLK
U500-D LM324A
R518 100K_5%
R520 383K_1%
R519 36.5K_1%
BAT54C_30V_0.2A D503
D506 BAT54S_30V_0.2A
+V5S
C524 1uF_25v
C505 1uF_16v
R553 10_5%
MAX_LX5
Place near L19
R16 1.5K_5%
D501 PDS540_5A_40V
Q21 AM4825P_AP
R9 20K_5%
R512 237K_1%
R503 100K_0.5%
R505 270K_5%
+V5AL
C500 0.1uF_16v
U8-A ON_LM393DR2G_SOP_8P
R509 0.015_1%_1W
R513 0.018_1%_1W
+VADP2
R31 100_1%
R33 100_1%
C16 1uF_6.3v
R35 1.62K_1%
R504 10K_5%
R500 1M_5%
AC_AND_CHG
R501 8.25K_1%
R502 14.3K_1%
C501 0.022uF_16v
U8-B ON_LM393DR2G_SOP_8P
R19 4.7K_5%
ALARM
R508 150K_1%
R536 1K_1%
R535 100K_5%
R507 100K_5%
Q9 SSM3K7002F
Q6 SSM3K7002F
24703VREF
R18 100_5%
CHGCTRL_3
R34 191K_1%
C15 0.1uF_16v
R32 140K_1%
1N4148 D2
2VREF
U1 TI_BQ24703_QFN_28P
ACN ACP ACDET ENABLE ACSEL ALARM SRSET ACSET ACPRES IBAT VREF COMP NC NC
ACDRVP VCC PWM# SRP SRN BATP BATDRVP VS VHSP BATSET BATDEP GND NC NC THERMAL
C13 4.7uF_25v
C502 1uF_25v
R506 1K_5%
D500 RLZ18C
D502 CHENMKO_BAT54_3P
C19 0.1uF_25v
C20 22uF_25v
R39 0_5%
AP_AM4835P_T1_PF Q20
D504 SSM34_3A40V
L2 PLFC1045R_10uH
R42 0.015_1%_1W
R12 412K_1%
R4 215K_1%
R6 330K_5%
R5 80.6K_1%
Q14 MMBT3906
SSM3K7002F Q8
Q5 SSM3K7002F
R3 220K_5%
C22 10uF_25v_K_X5R
C8 4.7uF_25v
C21 10uF_25v_K_X5R
R44 1K_1%
R43 1K_1%
C17 0.033uF_16v
Kevin sense
+VBDC
R539 60.4K_1%
R538 60.4K_1%
R537 150_1%
C510 150pF_50v
C504 1uF_6.3v
C23 4.7uF_6.3v
R8 174K_1%
R10 20K_1%
C2 180pF_50v
R11 7.87K_1%
Q12 SSM3K7002F
C18 OPEN
R17 13.7K_1%
R37 300K_0.1%
R36 24K_0.1%
R38 8.87K_0.5%
Q10 SSM3K7002F
R41 10K_5%
Q7 SSM3K7002F
6CELLSEL#
Note:
high power trace
6CELLSEL#=0,Vcharger=12.6V
6CELLSEL#=1,Vcharger=16.8V
R14 1M_5%
C503 0.1uF_16v
R7 100K_1%
R15 100K_1%
R45 24K_1%
R13 23.7K_0.1%
MICREL_LMC7101BIM5_SOT23_5P
INVENTEC
TITLE DDD UMA
DC &BATTERY CHARGER
SIZE A3
CODE CS
DOC. NUMBER Model_No
REV AX1
SHEET 5 OF 48
CHANGE by Smit
26-Mar-2007

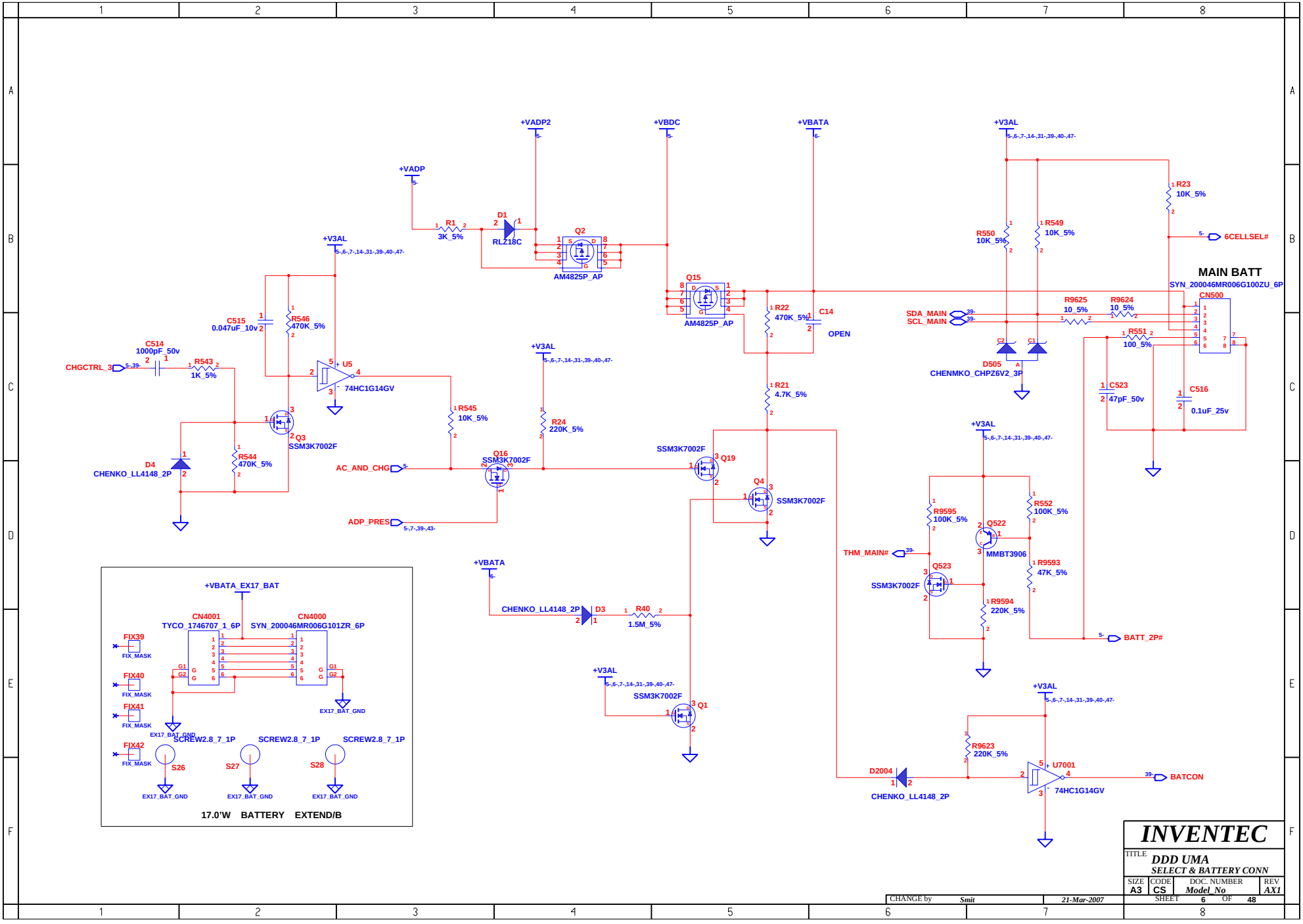
+VADP2
+VBDC
+VBATA
+V3AL
+VADP
R1
3K_5%
D1
RLZ18C
Q2
AM4825P_AP
Q15
AM4825P_AP
R22
470K_5%
C14
OPEN
R21
4.7K_5%
R23
10K_5%
6CELLSEL#
R550
10K_5%
R549
10K_5%
MAIN BATT
SYN_200046MR006G100ZU_6P
CN500
SDA_MAIN
SCL_MAIN
R9625
10_5%
R9624
10_5%
R551
100_5%
D505
CHENMKO_CHPZ6V2_3P
C523
47pF_50v
C516
0.1uF_25v
C515
0.047uF_10v
R546
470K_5%
C514
1000pF_50v
CHGCTRL_3
R543
1K_5%
U5
74HC1G14GV
R545
10K_5%
R24
220K_5%
Q3
SSM3K7002F
D4
CHENKO_LL4148_2P
R544
470K_5%
AC_AND_CHG
Q16
SSM3K7002F
ADP_PRES
Q19
Q4
R9595
100K_5%
R552
100K_5%
Q522
MMBT3906
THM_MAIN#
Q523
R9593
47K_5%
R9594
220K_5%
BATT_2P#
CHENKO_LL4148_2P
D3
R40
1.5M_5%
Q1
R9623
220K_5%
D2004
CHENKO_LL4148_2P
U7001
74HC1G14GV
BATCON
+VBATA_EX17_BAT
CN4001
TYCO_1746707_1_6P
CN4000
SYN_200046MR006G101ZR_6P
FIX39
FIX40
FIX41
FIX42
FIX_MASK
EX17_BAT_GND
SCREW2.8_7_1P
S26
S27
S28
17.0'W BATTERY EXTEND/B
INVENTEC
TITLE
DDD UMA
SELECT & BATTERY CONN
SIZE A3
CODE CS
DOC. NUMBER Model_No
REV AX1
SHEET 6 OF 48
CHANGE by Smit
21-Mar-2007

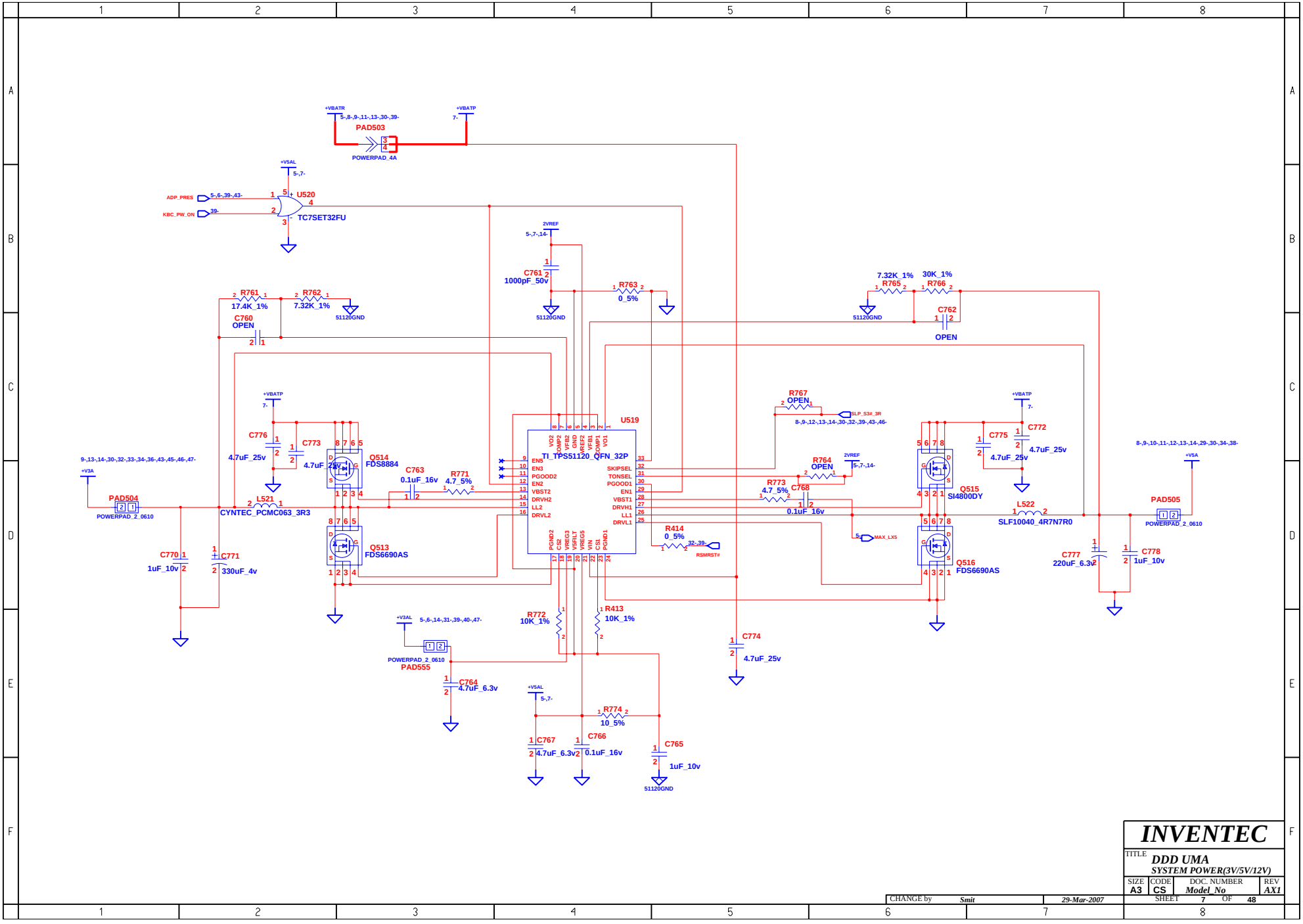


| | | | |
|---|---|---|---|
| INVENTEC | | | |
| TITLE | DDD UMA<br>SYSTEM POWER(3V/5V/12V) | | |
| SIZE A3 | CODE CS | DOC. NUMBER Model_No | REV AX1 |
| CHANGE by Smit | 29-Mar-2007 | SHEET 7 OF 48 | |

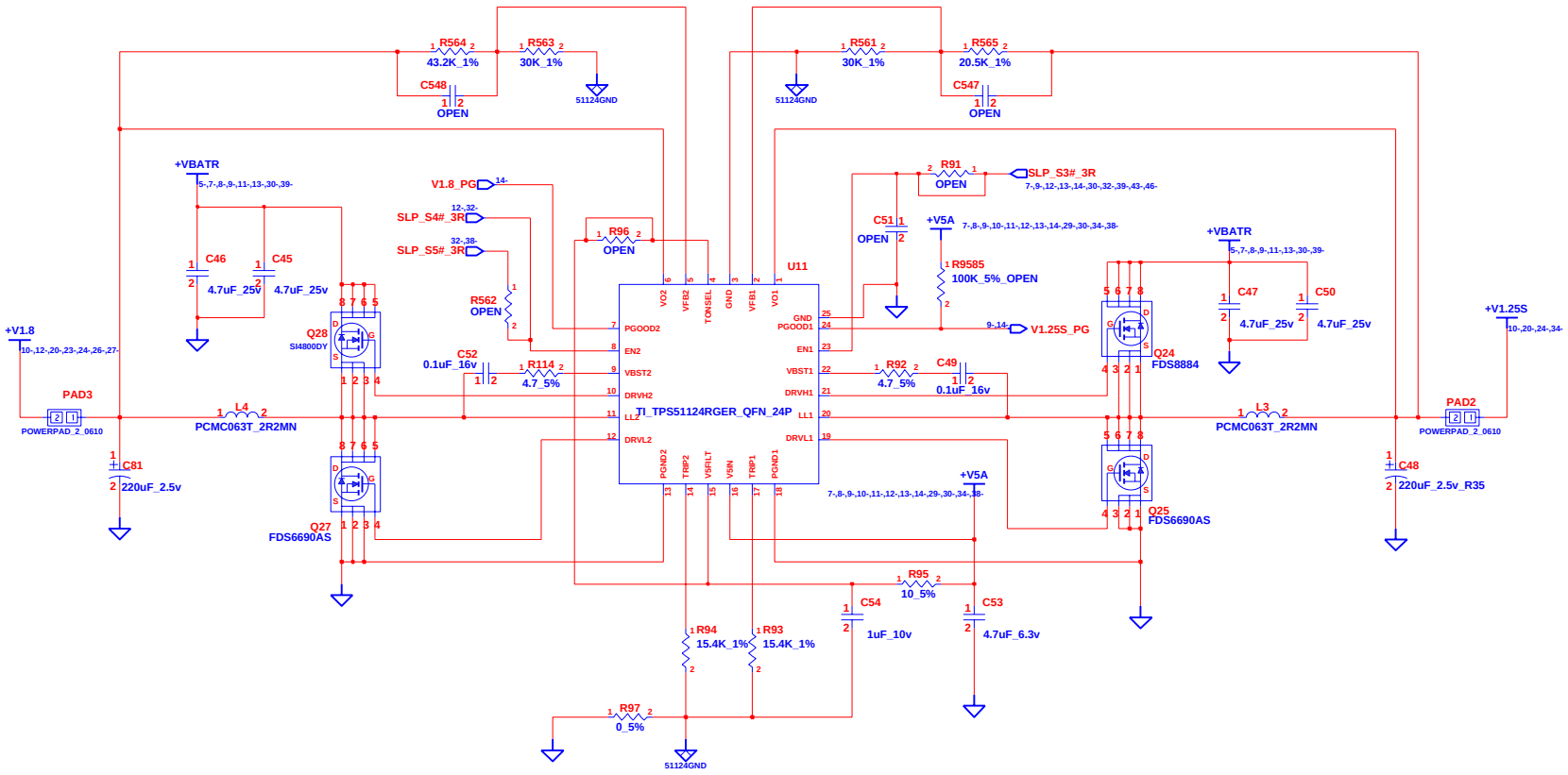


# INVENTEC

TITLE
**DDD UMA**
**SYSTEM POWER(+V1.8/+V1.25S)**

| SIZE | CODE | DOC. NUMBER | REV |
|---|---|---|---|
| A3 | CS | Model_No | AX1 |

SHEET 8 OF 48

| CHANGE by | Smit | 19-Mar-2007 |
|---|---|---|

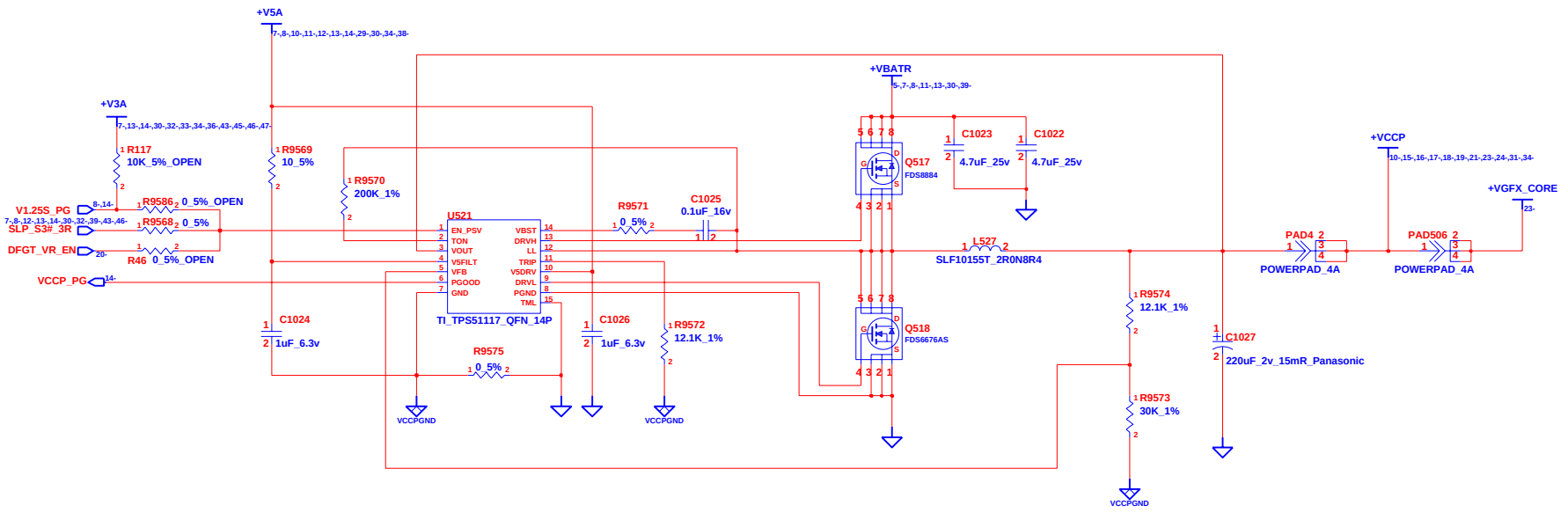


# INVENTEC

TITLE
**DDD UMA**
**GRAPHIC POWER (+VGFX_CORE)**

| SIZE | CODE | DOC. NUMBER | REV |
|---|---|---|---|
| A3 | CS | Model_No | AX1 |

CHANGE by Smit 15-Mar-2007

SHEET 9 OF 48

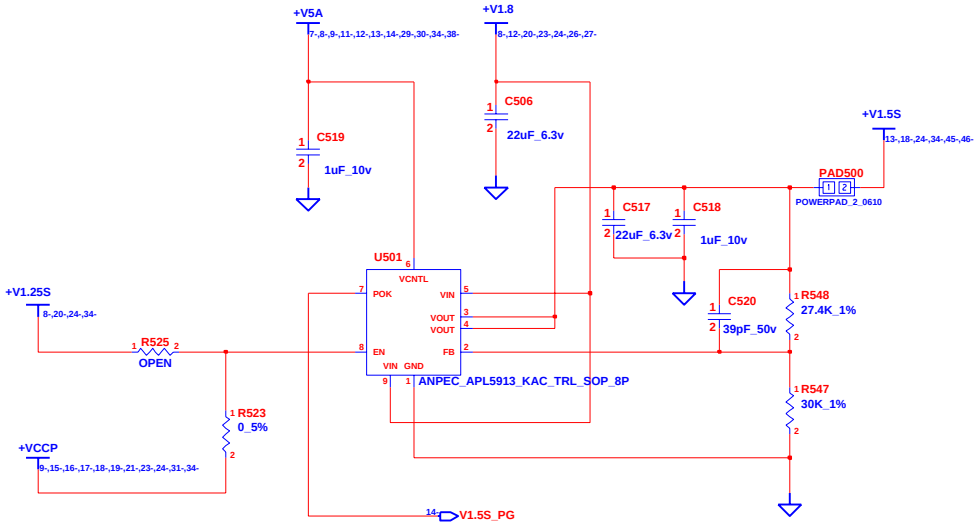


INVENTEC

TITLE DDD UMA
SYSTEM POWER(+VCCP/+V1.5S)

| SIZE | CODE | DOC. NUMBER | REV |
|---|---|---|---|
| A3 | CS | Model_No | AX1 |

CHANGE by Smit 15-Mar-2007

SHEET 10 OF 48

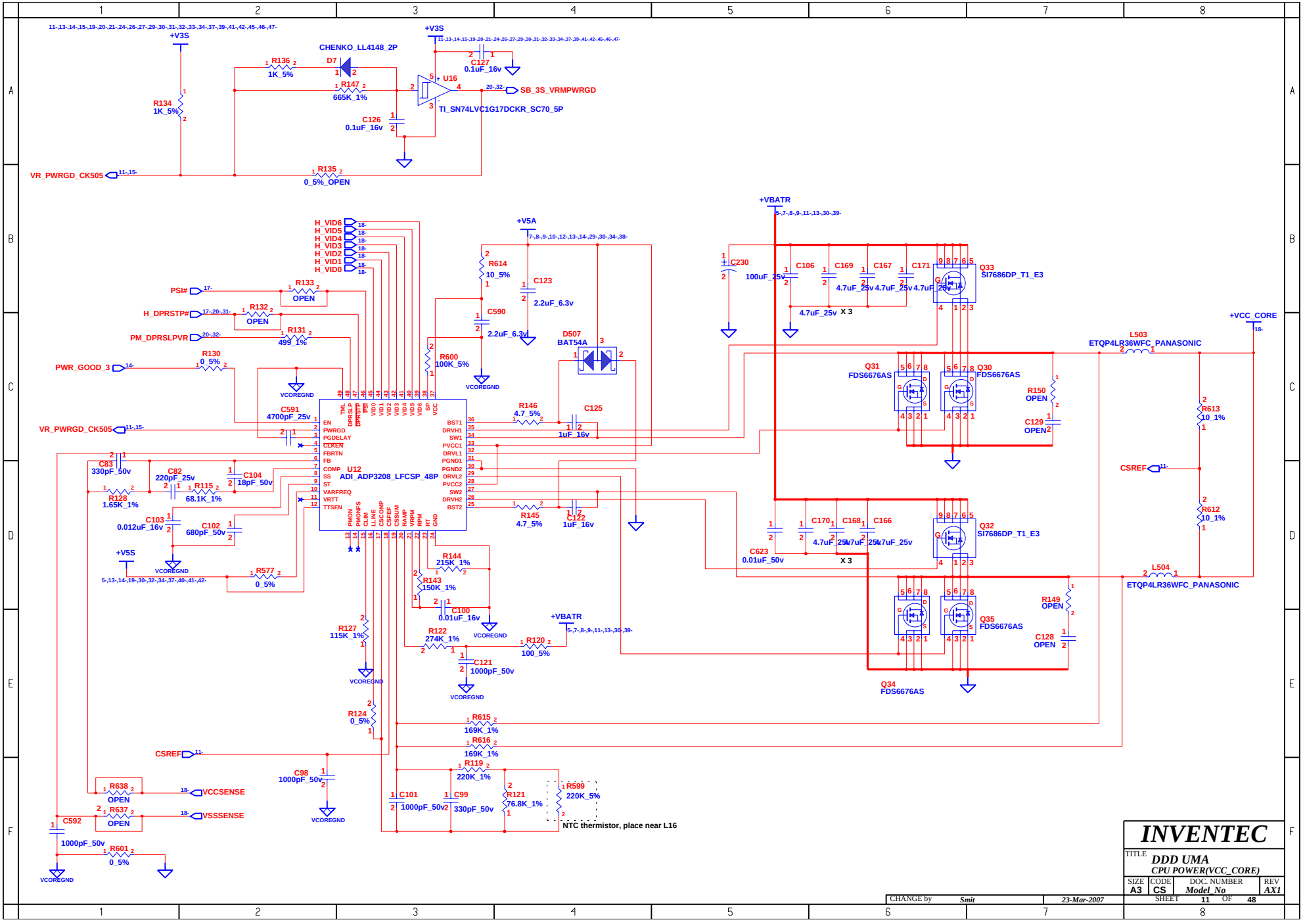
+V3S
CHENKO_LL4148_2P
D7
R136 1K_5%
R147 665K_1%
R134 1K_5%
C126 0.1uF_16v
U16
TI_SN74LVC1G17DCKR_SC70_5P
C127 0.1uF_16v
SB_3S_VRMPWRGD
VR_PWRGD_CK505
R135 0_5%_OPEN
+VBATR
+V5A
H_VID6
H_VID5
H_VID4
H_VID3
H_VID2
H_VID1
H_VID0
PSI#
R133 OPEN
H_DPRSTP#
R132 OPEN
PM_DPRSLPVR
R131 499_1%
PWR_GOOD_3
R130 0_5%
VCOREGND
C591 4700pF_25v
VR_PWRGD_CK505
C83 330pF_50v
R128 1.65K_1%
C82 220pF_25v
R115 68.1K_1%
C104 18pF_50v
C103 0.012uF_16v
C102 680pF_50v
+V5S
R577 0_5%
U12
ADI_ADP3208_LFCSP_48P
EN
PWRGD
PGDELAY
CLKEN
FBRTN
FB
COMP
SS
ST
VARFREQ
VRTT
TTSEN
TMI
DPRSLP
DPRSTP
PSI
VID0
VID1
VID2
VID3
VID4
VID5
VID6
SP
SN
VCC
BST1
DRVH1
SW1
PVCC1
DRVL1
PGND1
PGND2
DRVL2
PVCC2
SW2
DRVH2
BST2
PMON
PMONFS
CLM
LLINE
VCOMP
CSFEB
CSSUM
RAMP
VRPM
RPM
RT
GND
R614 10_5%
C123 2.2uF_6.3v
C590 2.2uF_6.3v
R600 100K_5%
D507 BAT54A
R146 4.7_5%
C125 1uF_16v
R145 4.7_5%
C122 1uF_16v
R144 215K_1%
R143 150K_1%
C100 0.01uF_16v
R127 115K_1%
R122 274K_1%
R120 100_5%
C121 1000pF_50v
R124 0_5%
R615 169K_1%
R616 169K_1%
R119 220K_1%
R121 76.8K_1%
R599 220K_5%
NTC thermistor, place near L16
C101 1000pF_50v
C99 330pF_50v
C98 1000pF_50v
CSREF
R638 OPEN
VCCSENSE
R637 OPEN
VSSSENSE
C592 1000pF_50v
R601 0_5%
C230 100uF_25v
C106 4.7uF_25v
C169 4.7uF_25v
C167 4.7uF_25v
C171 4.7uF_25v
Q33 SI7686DP_T1_E3
X 3
Q31 FDS6676AS
Q30 FDS6676AS
R150 OPEN
C129 OPEN
L503 ETQP4LR36WFC_PANASONIC
+VCC_CORE
R613 10_1%
R612 10_1%
C623 0.01uF_50v
C170 4.7uF_25v
C168 4.7uF_25v
C166 4.7uF_25v
Q32 SI7686DP_T1_E3
L504 ETQP4LR36WFC_PANASONIC
R149 OPEN
C128 OPEN
Q35 FDS6676AS
Q34 FDS6676AS
INVENTEC
TITLE
DDD UMA
CPU POWER(VCC_CORE)
SIZE A3
CODE CS
DOC. NUMBER Model_No
REV AX1
SHEET 11 OF 48
CHANGE by Smit
23-Mar-2007

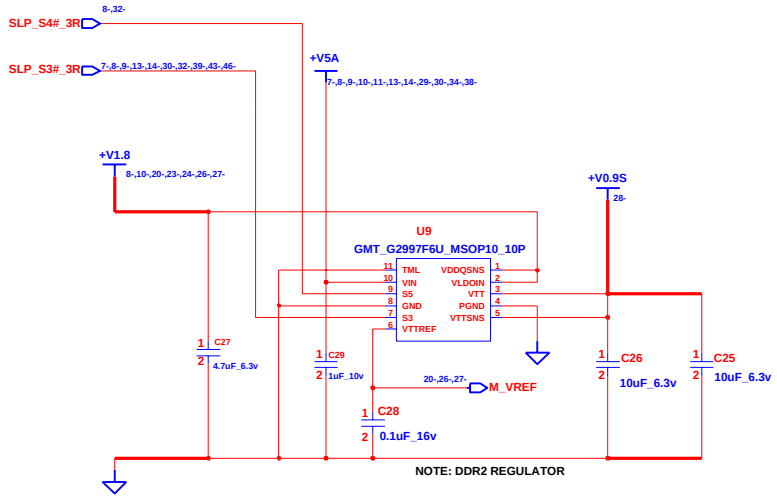


INVENTEC

TITLE DDD UMA
DDR TERMINATION VOLTAGE

| SIZE | CODE | DOC. NUMBER | REV |
|---|---|---|---|
| A3 | CS | Model_No | AX1 |

CHANGE by Smit 15-Mar-2007

SHEET 12 OF 48

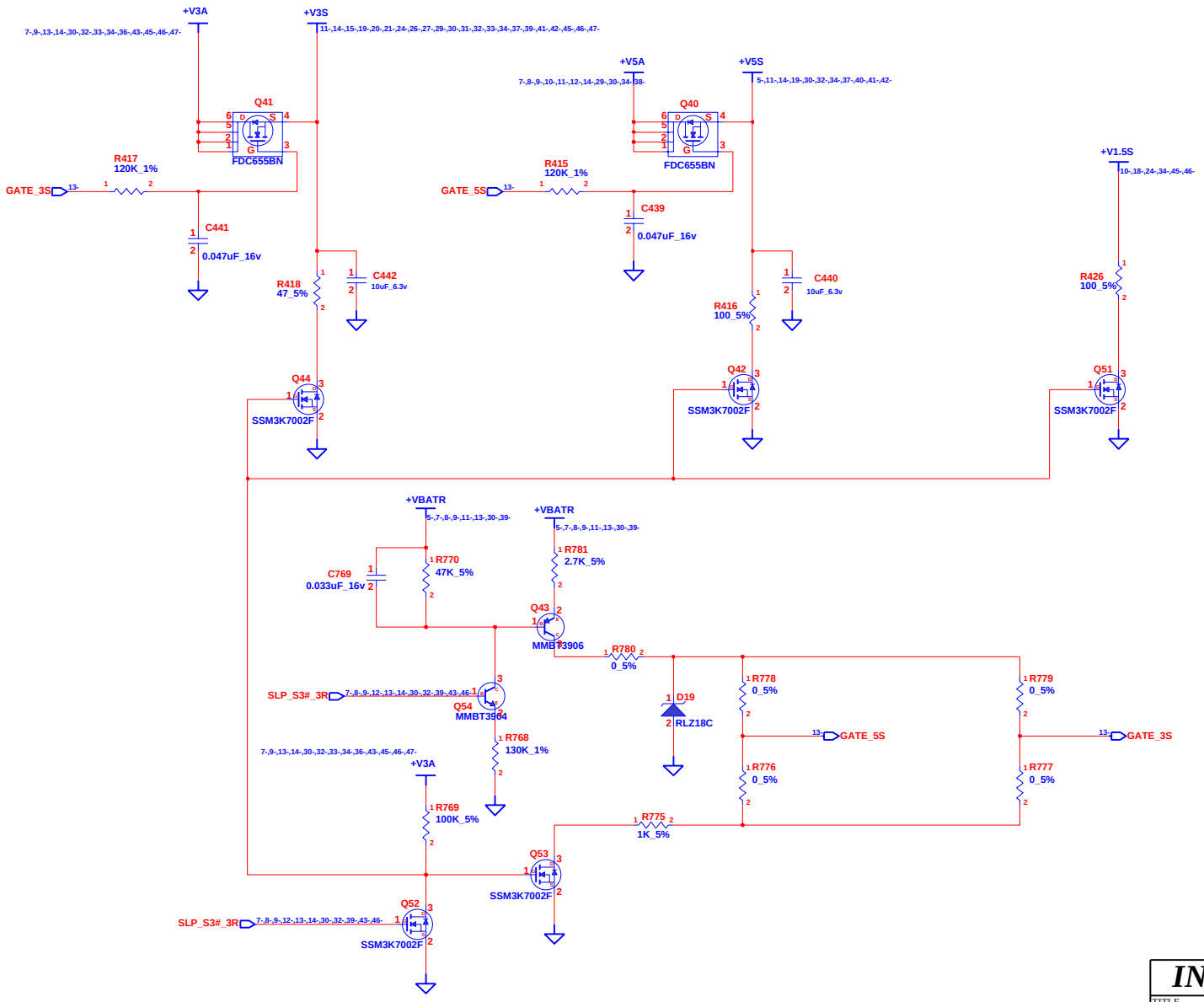


# INVENTEC

TITLE **DDD UMA**
**POWER(SLEEP)**

| SIZE | CODE | DOC. NUMBER | REV |
|---|---|---|---|
| A3 | CS | Model_No | AX1 |

SHEET 13 OF 48

CHANGE by Smit 15-Mar-2007

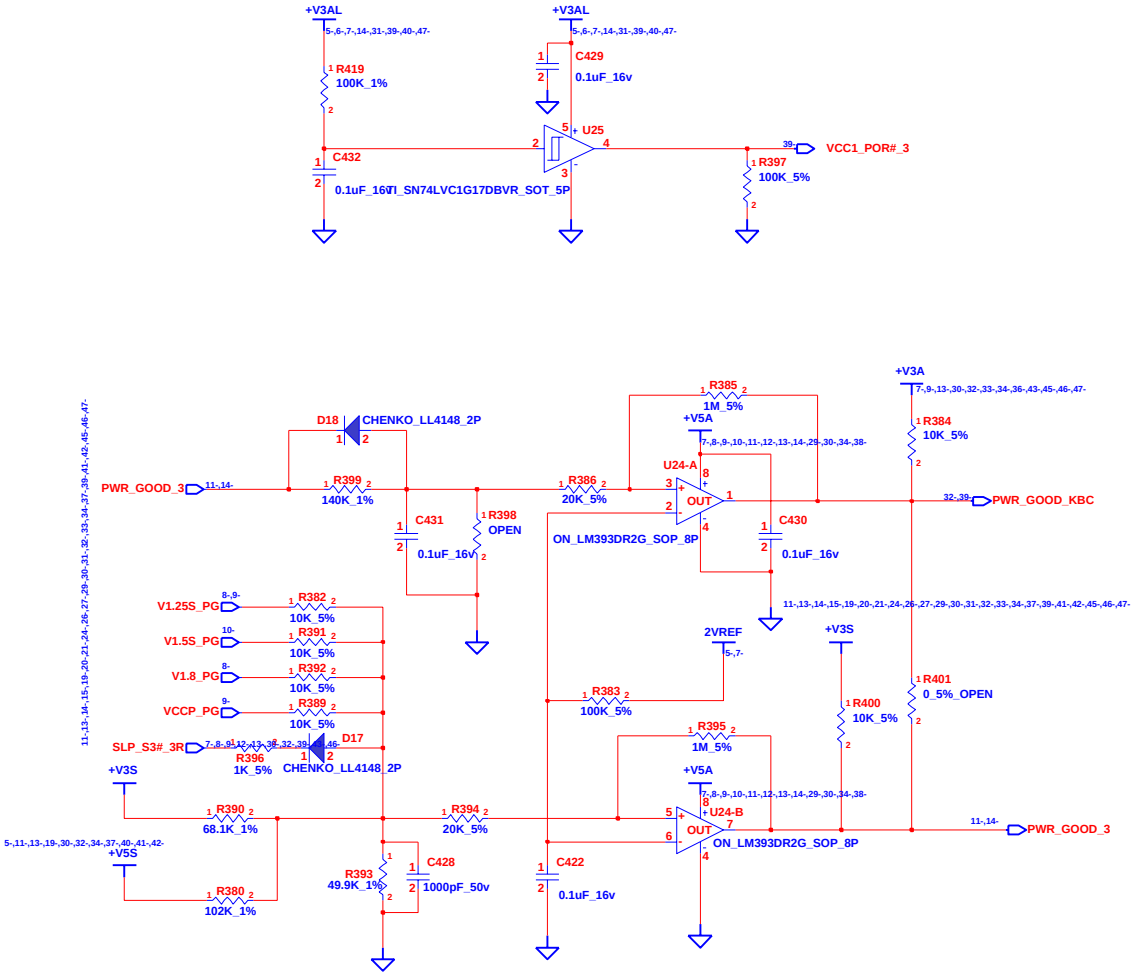


# INVENTEC

TITLE **DDD UMA**
**POWER(SEQUENCE)**

| SIZE | CODE | DOC. NUMBER | REV |
|---|---|---|---|
| A3 | CS | Model_No | AX1 |

SHEET 14 OF 48

CHANGE by Smit 15-Mar-2007

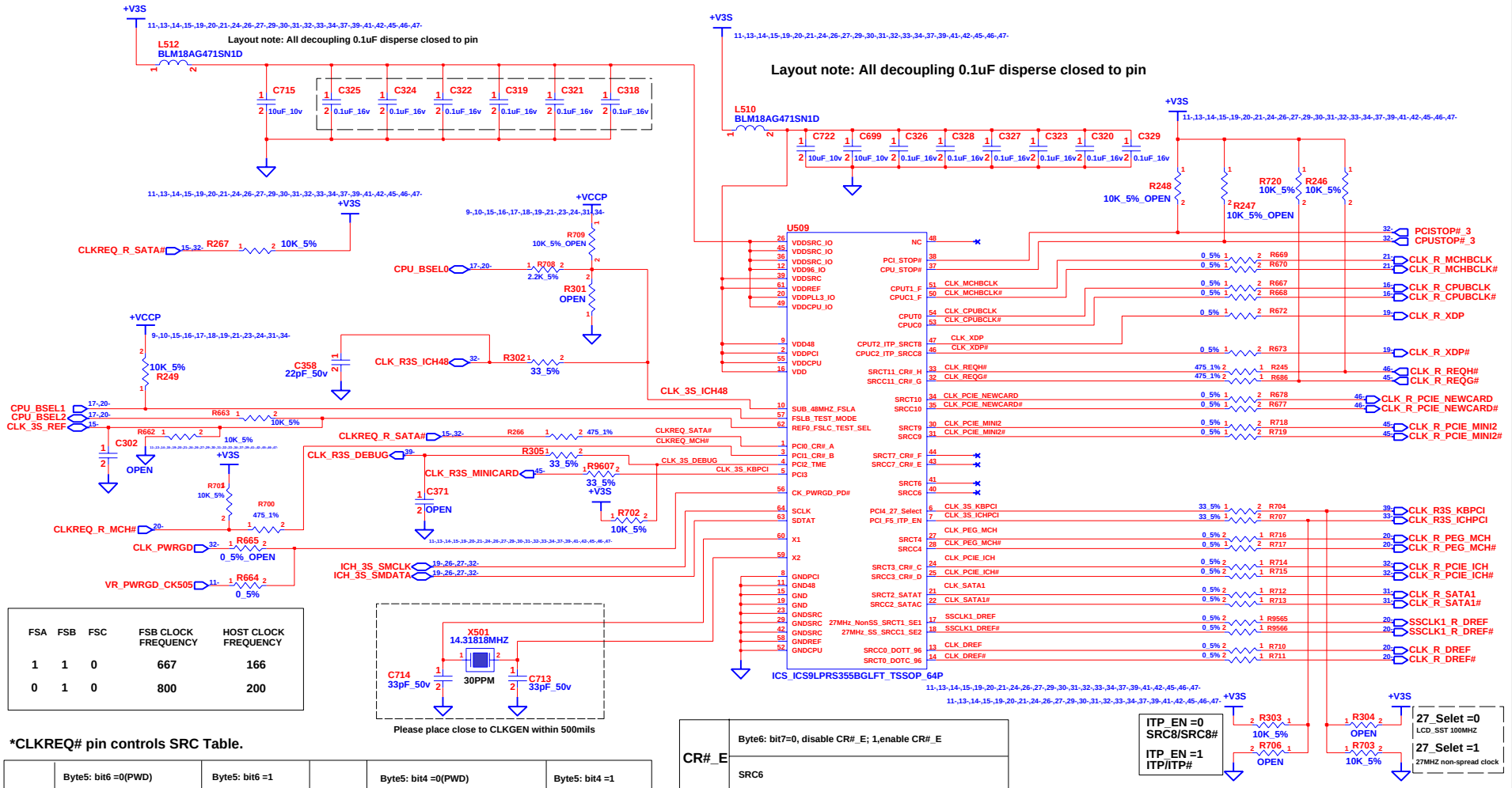


| FSA | FSB | FSC | FSB CLOCK FREQUENCY | HOST CLOCK FREQUENCY |
|---|---|---|---|---|
| 1 | 1 | 0 | 667 | 166 |
| 0 | 1 | 0 | 800 | 200 |

***CLKREQ# pin controls SRC Table.**

| | | | | | |
|---|---|---|---|---|---|
| CR#_A | Byte5: bit6 =0(PWD) | Byte5: bit6 =1 | CR#_B | Byte5: bit4 =0(PWD) | Byte5: bit4 =1 |
| | SRC0 | SRC2 | | SRC1 | SRC4 |
| | Byte5: bit7=0, disable CR#_A; 1,enable CR#_A | | | Byte5: bit5=0, disable CR#_B; 1,enable CR#_B | |

| | | | | | |
|---|---|---|---|---|---|
| CR#_C | Byte5: bit2 =0(PWD) | Byte5: bit2 =1 | CR#_D | Byte5: bit0 =0(PWD) | Byte5: bit0 =1 |
| | SRC0 | SRC2 | | SRC1 | SRC4 |
| | Byte5: bit3=0, disable CR#_C; 1,enable CR#_C | | | Byte5: bit1=0, disable CR#_D; 1,enable CR#_D | |

| | |
|---|---|
| CR#_E | Byte6: bit7=0, disable CR#_E; 1,enable CR#_E |
| | SRC6 |
| CR#_F | Byte6: bit6=0, disable CR#_F; 1,enable CR#_F |
| | SRC8 |
| CR#_G | Byte6: bit5=0, disable CR#_G; 1,enable CR#_G |
| | SRC9 |
| CR#_H | Byte6: bit4=0, disable CR#_H; 1,enable CR#_H |
| | SRC10 |

| | | | |
|---|---|---|---|
| CHANGE by | Smit | 15-Mar-2007 | |

INVENTEC

TITLE DDD UMA CLOCK_GENERATOR

| SIZE | CODE | DOC. NUMBER | REV |
|---|---|---|---|
| A3 | CS | Model_No | AX1 |

SHEET 15 OF 48

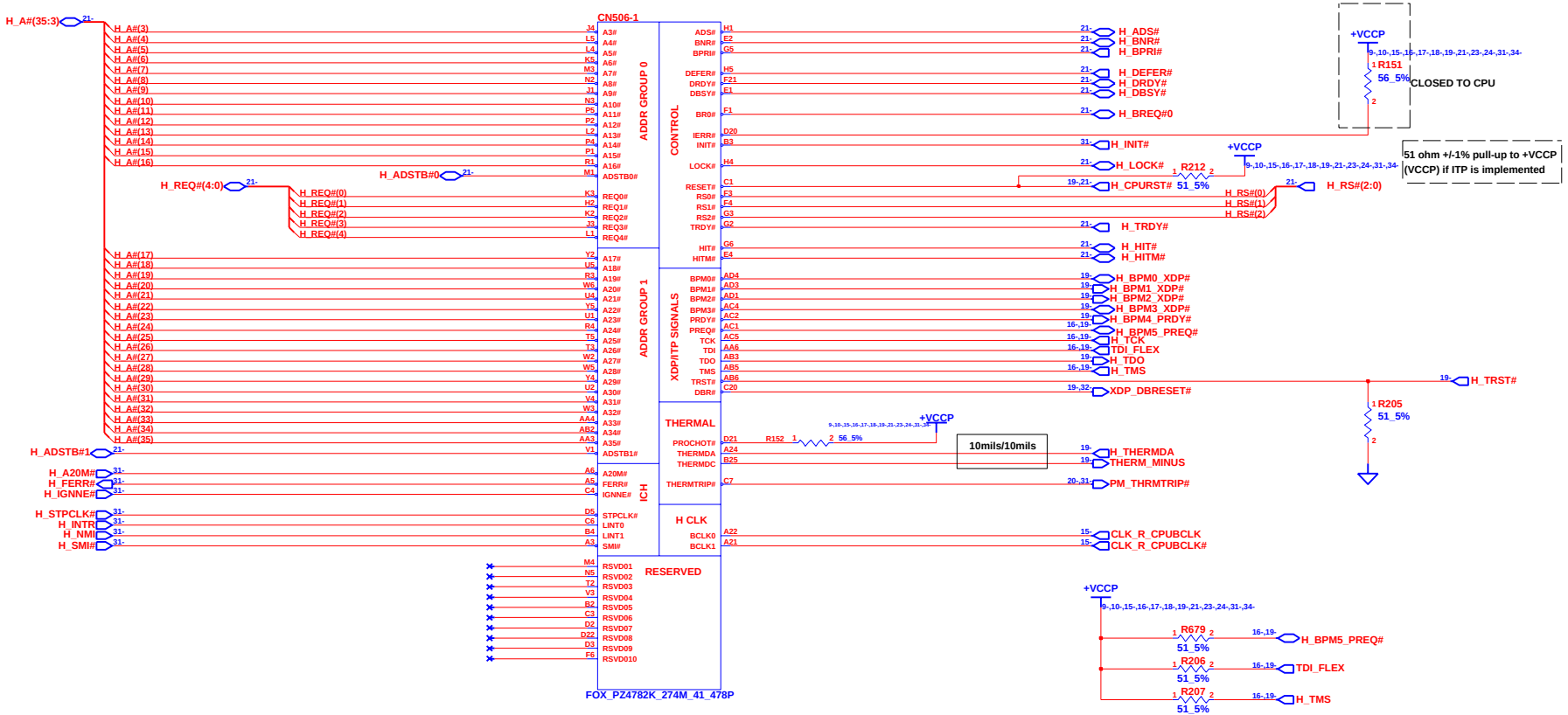


INVENTEC

TITLE DDD UMA
MEROM-1

| SIZE | CODE | DOC. NUMBER | REV |
|---|---|---|---|
| A3 | CS | Model_No | AX1 |

SHEET 16 OF 48

CHANGE by Smit 15-Mar-2007

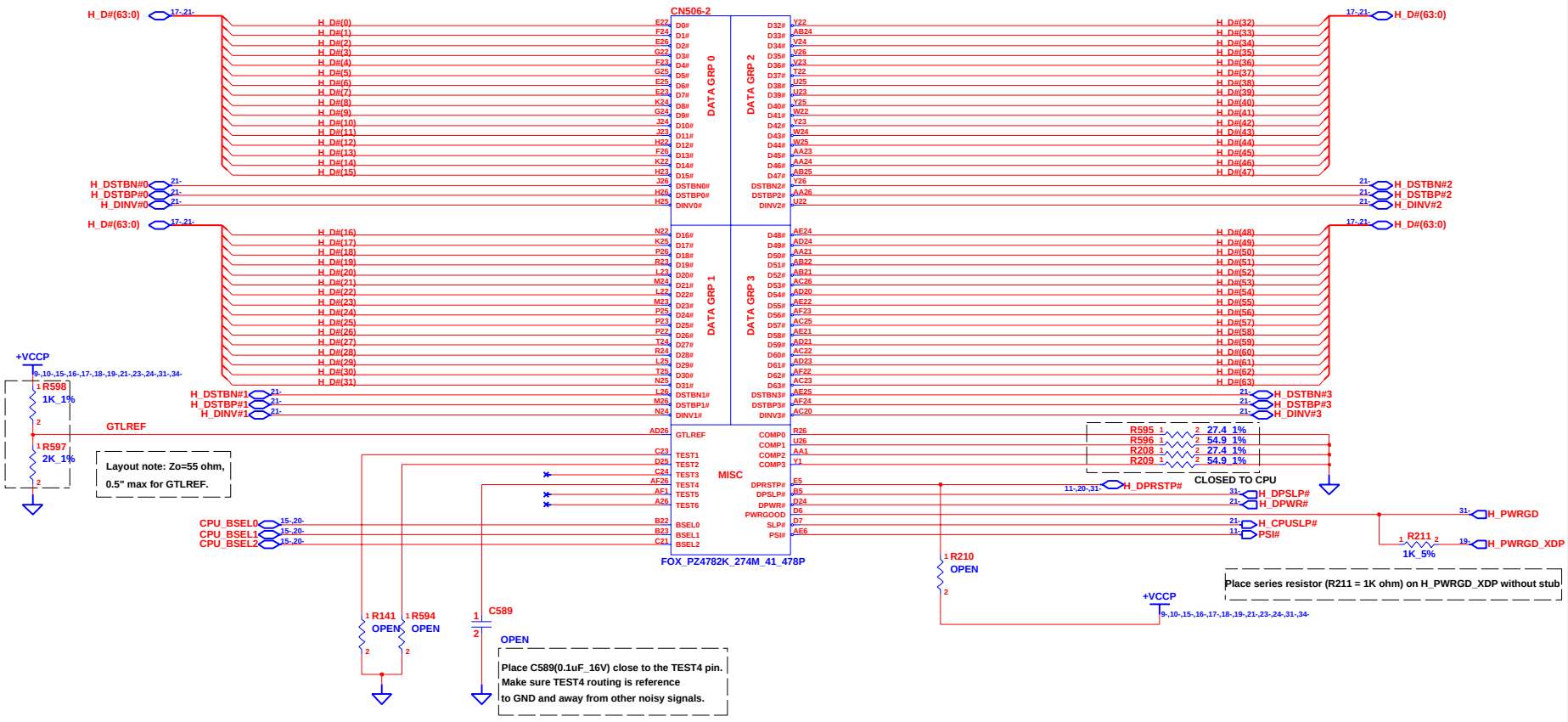


| | | | |
|---|---|---|---|
| INVENTEC | | | |
| TITLE DDD UMA MEROM-2 | | | |
| SIZE A3 | CODE CS | DOC. NUMBER Model_No | REV AX1 |
| CHANGE by Smit | 15-Mar-2007 | SHEET 17 OF 48 | |

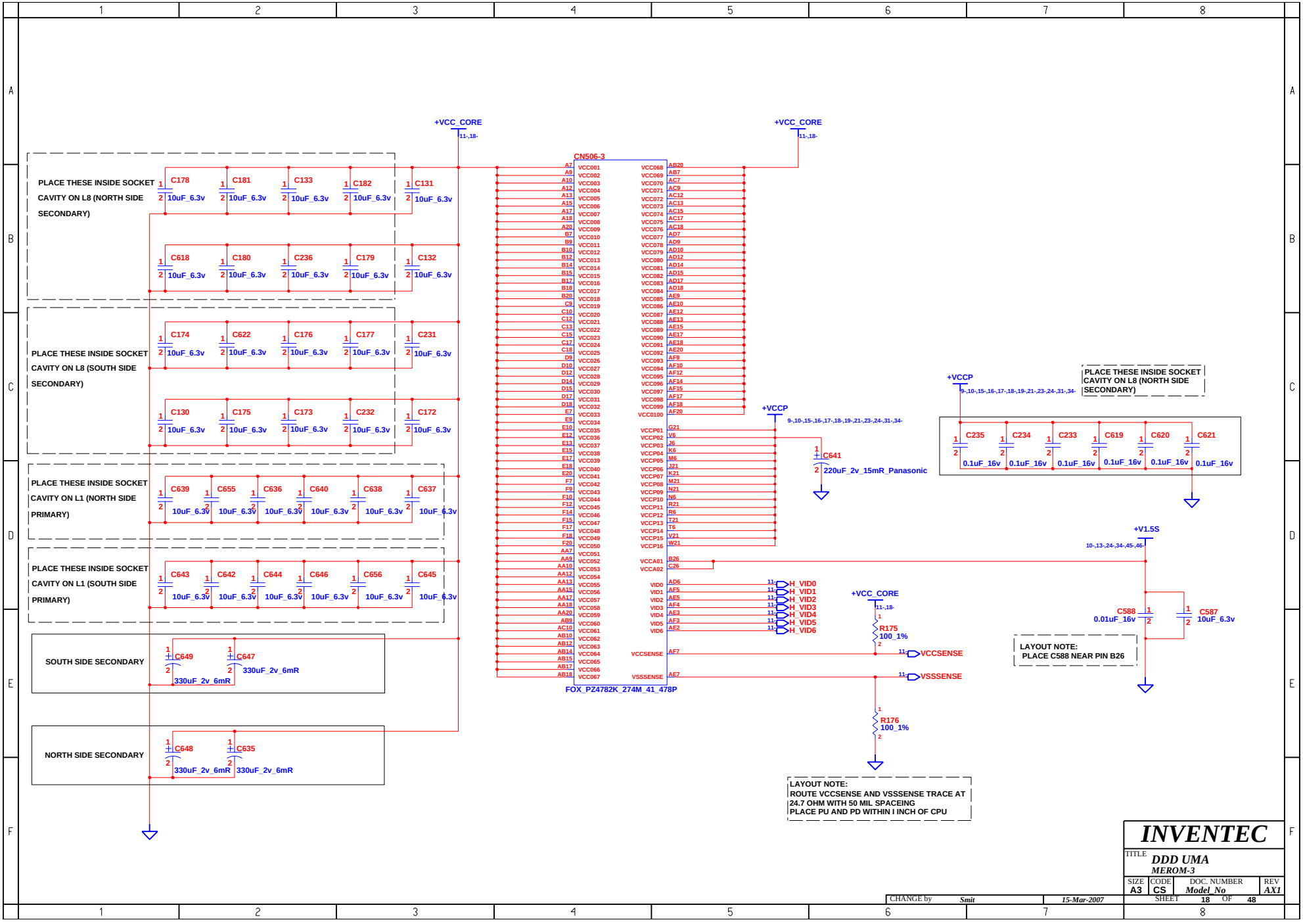
+VCC_CORE
11-,18-
CN506-3
PLACE THESE INSIDE SOCKET CAVITY ON L8 (NORTH SIDE SECONDARY)
C178 C181 C133 C182 C131
C618 C180 C236 C179 C132
10uF_6.3v
PLACE THESE INSIDE SOCKET CAVITY ON L8 (SOUTH SIDE SECONDARY)
C174 C622 C176 C177 C231
C130 C175 C173 C232 C172
PLACE THESE INSIDE SOCKET CAVITY ON L1 (NORTH SIDE PRIMARY)
C639 C655 C636 C640 C638 C637
PLACE THESE INSIDE SOCKET CAVITY ON L1 (SOUTH SIDE PRIMARY)
C643 C642 C644 C646 C656 C645
SOUTH SIDE SECONDARY
C649 C647
330uF_2v_6mR
NORTH SIDE SECONDARY
C648 C635
FOX_PZ4782K_274M_41_478P
+VCCP
9-,10-,15-,16-,17-,18-,19-,21-,23-,24-,31-,34-
C641
220uF_2v_15mR_Panasonic
PLACE THESE INSIDE SOCKET CAVITY ON L8 (NORTH SIDE SECONDARY)
C235 C234 C233 C619 C620 C621
0.1uF_16v
+V1.5S
10-,13-,24-,34-,45-,46-
C588 0.01uF_16v
C587 10uF_6.3v
LAYOUT NOTE:
PLACE C588 NEAR PIN B26
H_VID0
H_VID1
H_VID2
H_VID3
H_VID4
H_VID5
H_VID6
R175 100_1%
VCCSENSE
VSSSENSE
R176 100_1%
LAYOUT NOTE:
ROUTE VCCSENSE AND VSSSENSE TRACE AT 24.7 OHM WITH 50 MIL SPACEING
PLACE PU AND PD WITHIN I INCH OF CPU
INVENTEC
TITLE DDD UMA
MEROM-3
SIZE A3
CODE CS
DOC. NUMBER Model_No
REV AX1
SHEET 18 OF 48
CHANGE by Smit
15-Mar-2007

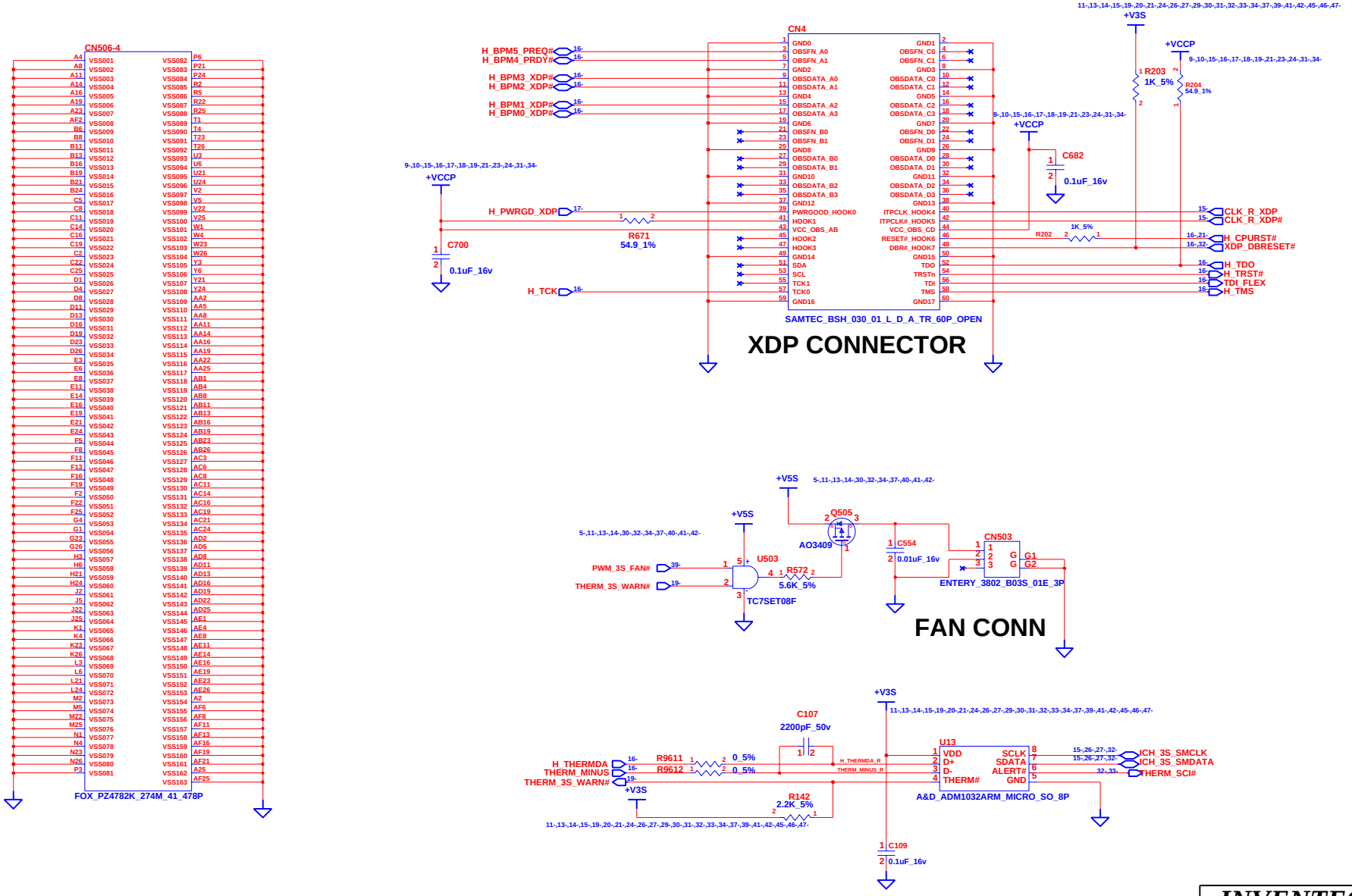


LAYOUT NOTES: PUT THE THERMAL SENSOR CLOSE TO CPU

| | | | |
|---|---|---|---|
| INVENTEC | | | |
| TITLE DDD UMA THERMAL&FAN | | | |
| SIZE A3 | CODE CS | DOC. NUMBER Model_No | REV AX1 |
| CHANGE by Smit | 15-Mar-2007 | SHEET 19 OF 48 | |

| MCH_CFG(5) | LOW=DMIx2<br>HIGH=DMIx4 |
|---|---|

| MCH_CFG(7)<br>(CPU Strap) | LOW=RSVD<br>HIGH=Mobile CPU |
|---|---|

| MCH_CFG(9)<br>PCIE Graphics Lane | LOW=Reverse Lane<br>HIGH=Normal operation |
|---|---|

**NOTE : USE 4K-OHM RESISTOR WHEN INSTALLING PULL-UP/PULL-DOWN RESISTOR ON ANY MCH-CFG CONNECTION/PINS.**

| MCH_CFG(13:12)<br>XOR/ALLZ | 00=PARTIAL CLOCK GATING DISABLE<br>01=XOR MODE ENABLE<br>10=ALL-Z MODE ENABLE<br>11=NORMAL OPERATION |
|---|---|

| MCH_CFG(16)<br>(FSB Dynamic ODT) | LOW=Dynamic ODT Disable<br>HIGH=Dynamic ODT Enable |
|---|---|

| MCH_CFG(11)<br>PSB 4X CLK ENABLE | LOW=CALISTOGA<br>HIGH=RESERVED |
|---|---|

NOTE: CFG[2:0] STRP : 001b : 533 MT/S
011b : 667 MT/S

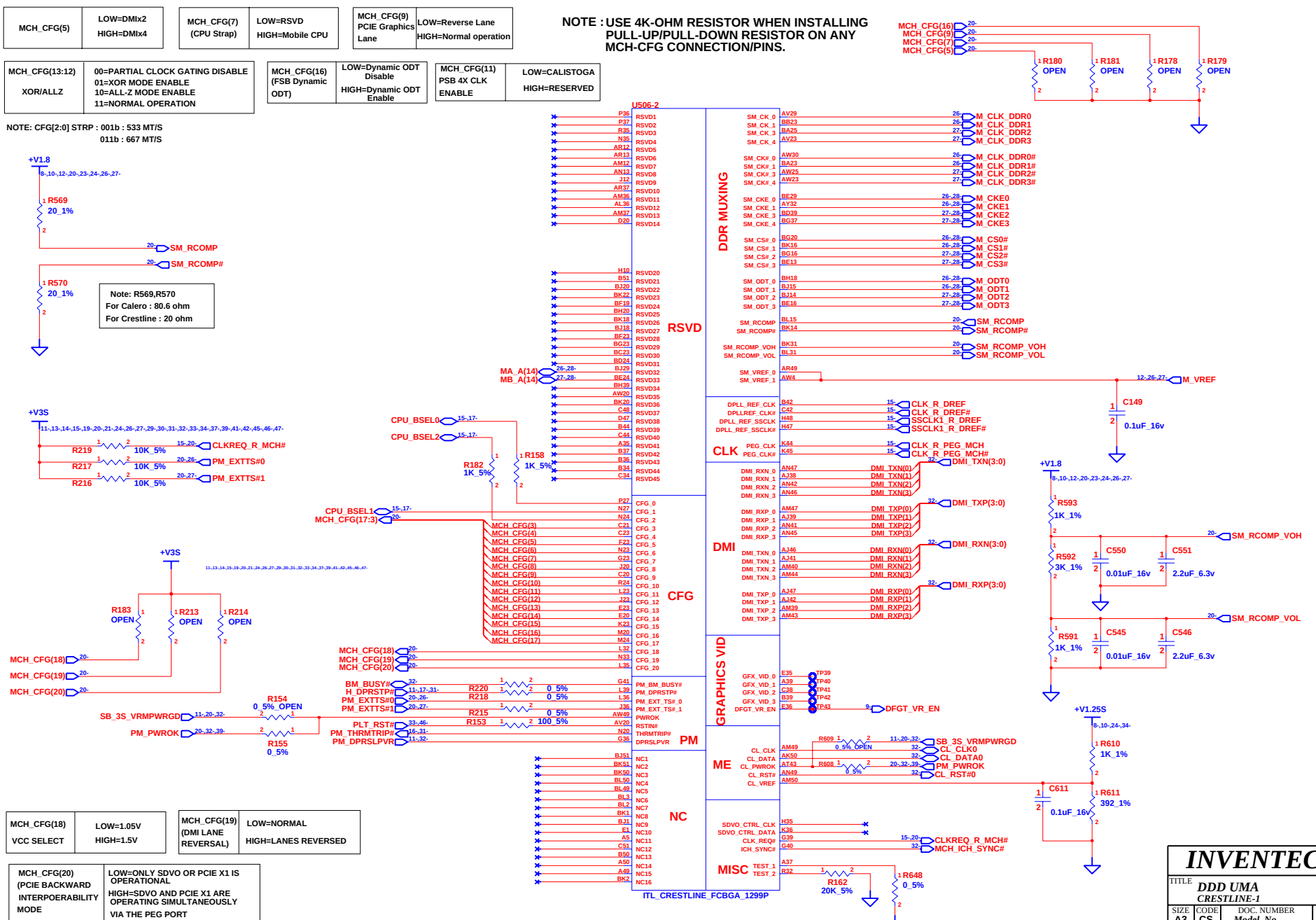


| MCH_CFG(18)<br>VCC SELECT | LOW=1.05V<br>HIGH=1.5V |
|---|---|

| MCH_CFG(19)<br>(DMI LANE REVERSAL) | LOW=NORMAL<br>HIGH=LANES REVERSED |
|---|---|

| MCH_CFG(20)<br>(PCIE BACKWARD INTERPOERABILITY MODE | LOW=ONLY SDVO OR PCIE X1 IS OPERATIONAL<br>HIGH=SDVO AND PCIE X1 ARE OPERATING SIMULTANEOUSLY VIA THE PEG PORT |
|---|---|

**INVENTEC**

TITLE: DDD UMA
CRESTLINE-1

| SIZE | CODE | DOC. NUMBER | REV |
|---|---|---|---|
| A3 | CS | Model_No | AX1 |

SHEET 20 OF 48

CHANGE by Smit 15-Mar-2007

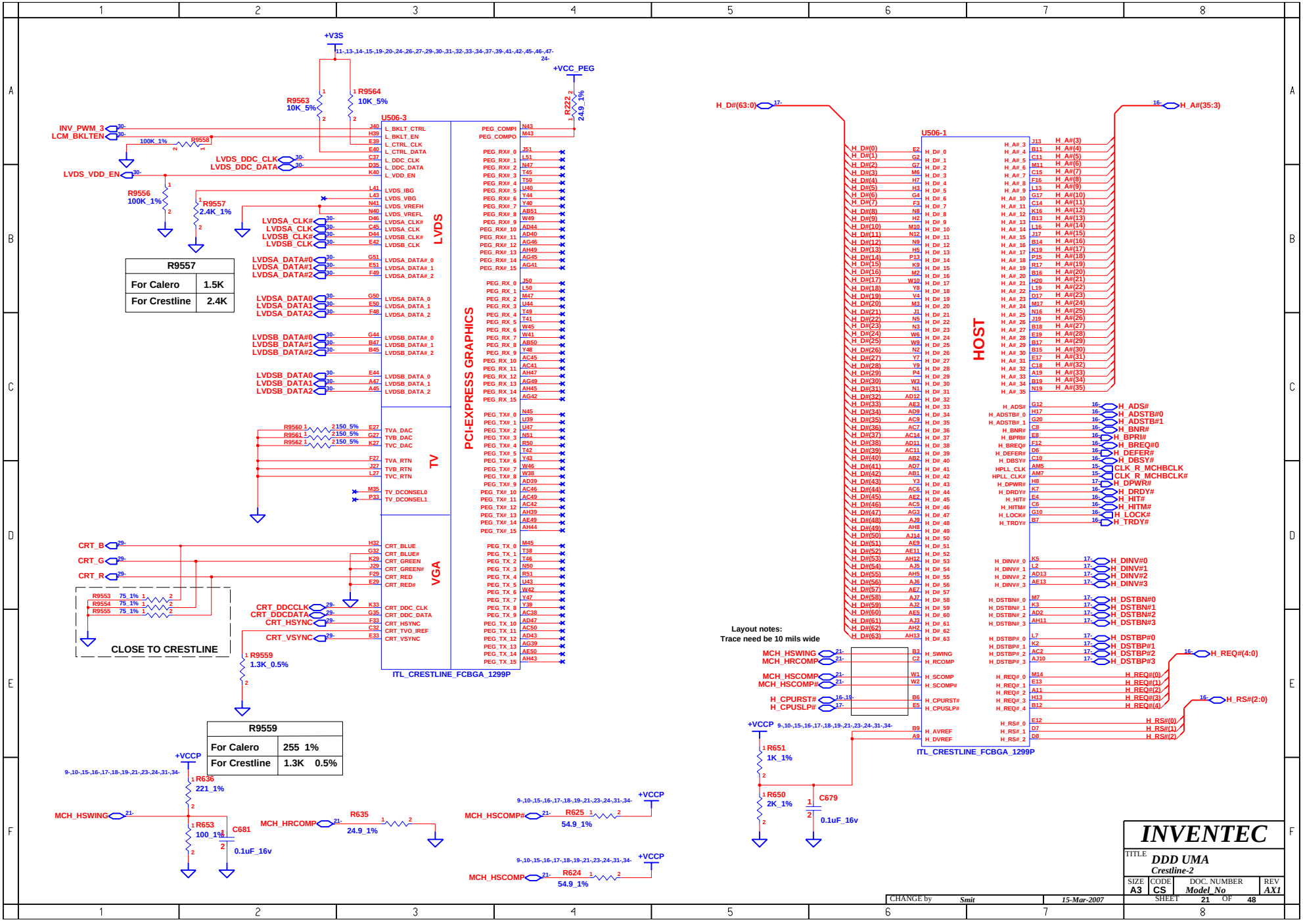
U506-3
LVDS
PCI-EXPRESS GRAPHICS
TV
VGA
ITL_CRESTLINE_FCBGA_1299P
U506-1
HOST
ITL_CRESTLINE_FCBGA_1299P
+V3S
+VCC_PEG
R9563 10K_5%
R9564 10K_5%
R222 24.9_1%
INV_PWM_3
LCM_BKLTEN
LVDS_DDC_CLK
LVDS_DDC_DATA
LVDS_VDD_EN
R9556 100K_1%
R9557 2.4K_1%
LVDSA_CLK#
LVDSA_CLK
LVDSB_CLK#
LVDSB_CLK
LVDSA_DATA#0
LVDSA_DATA#1
LVDSA_DATA#2
LVDSA_DATA0
LVDSA_DATA1
LVDSA_DATA2
LVDSB_DATA#0
LVDSB_DATA#1
LVDSB_DATA#2
LVDSB_DATA0
LVDSB_DATA1
LVDSB_DATA2
R9560 2150_5%
R9561 2150_5%
R9562 2150_5%
TV_DCONSEL0
TV_DCONSEL1
CRT_B
CRT_G
CRT_R
R9553 75_1%
R9554 75_1%
R9555 75_1%
CLOSE TO CRESTLINE
CRT_DDCCLK
CRT_DDCDATA
CRT_HSYNC
CRT_VSYNC
R9559 1.3K_0.5%
R9557
For Calero 1.5K
For Crestline 2.4K
R9559
For Calero 255 1%
For Crestline 1.3K 0.5%
+VCCP
R636 221_1%
MCH_HSWING
R653 100_1%
C681 0.1uF_16v
MCH_HRCOMP
R635 24.9_1%
MCH_HSCOMP#
R625 54.9_1%
MCH_HSCOMP
R624 54.9_1%
H_D#(63:0)
H_A#(35:3)
Layout notes:
Trace need be 10 mils wide
MCH_HSWING
MCH_HRCOMP
MCH_HSCOMP
MCH_HSCOMP#
H_CPURST#
H_CPUSLP#
H_REQ#(4:0)
H_RS#(2:0)
R651 1K_1%
R650 2K_1%
C679 0.1uF_16v
INVENTEC
TITLE DDD UMA
Crestline-2
SIZE A3
CODE CS
DOC. NUMBER Model_No
REV AX1
SHEET 21 OF 48
CHANGE by Smit
15-Mar-2007

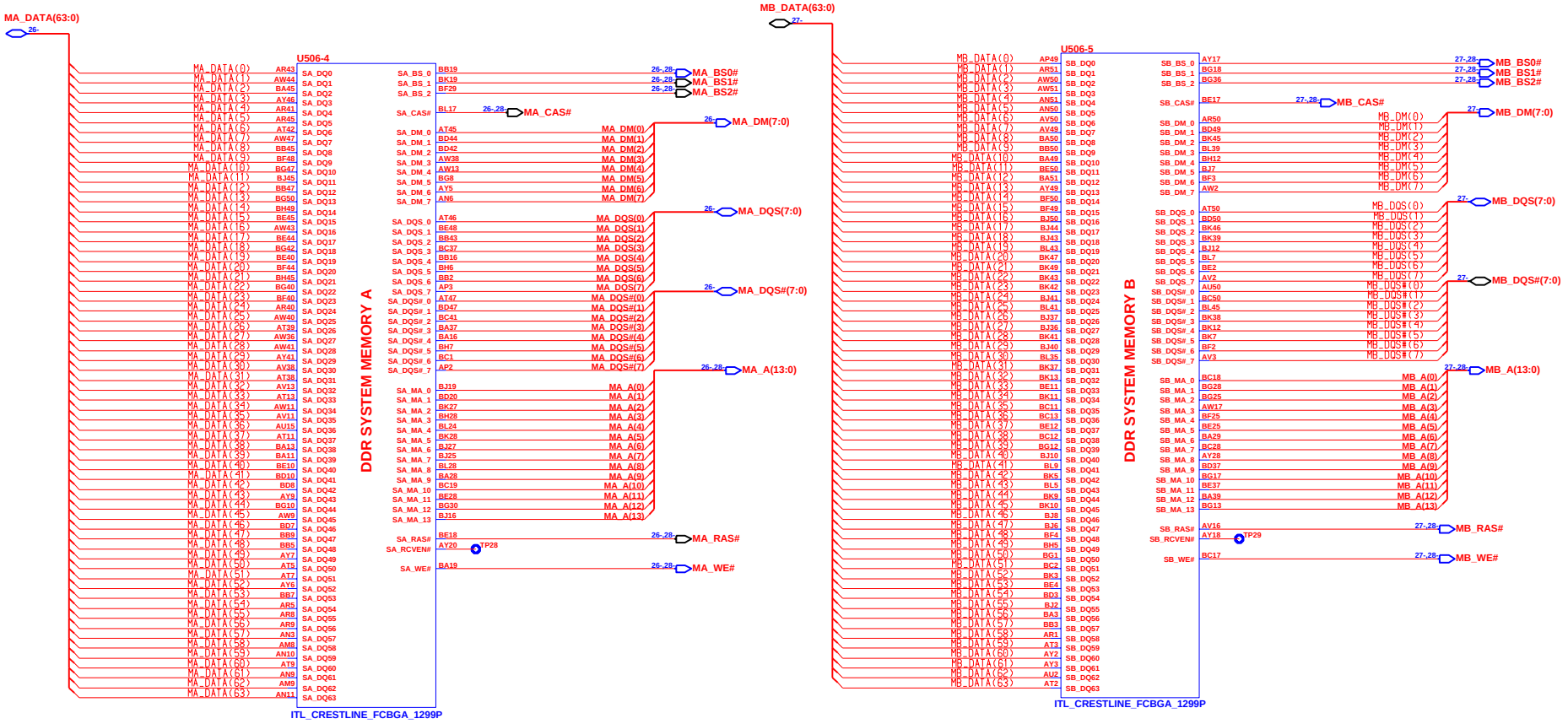


| INVENTEC | | | |
|---|---|---|---|
| TITLE DDD UMA CRESTLINE-3 | | | |
| SIZE A3 | CODE CS | DOC. NUMBER Model_No | REV AX1 |
| CHANGE by Smit | 15-Mar-2007 | SHEET 22 OF 48 | |

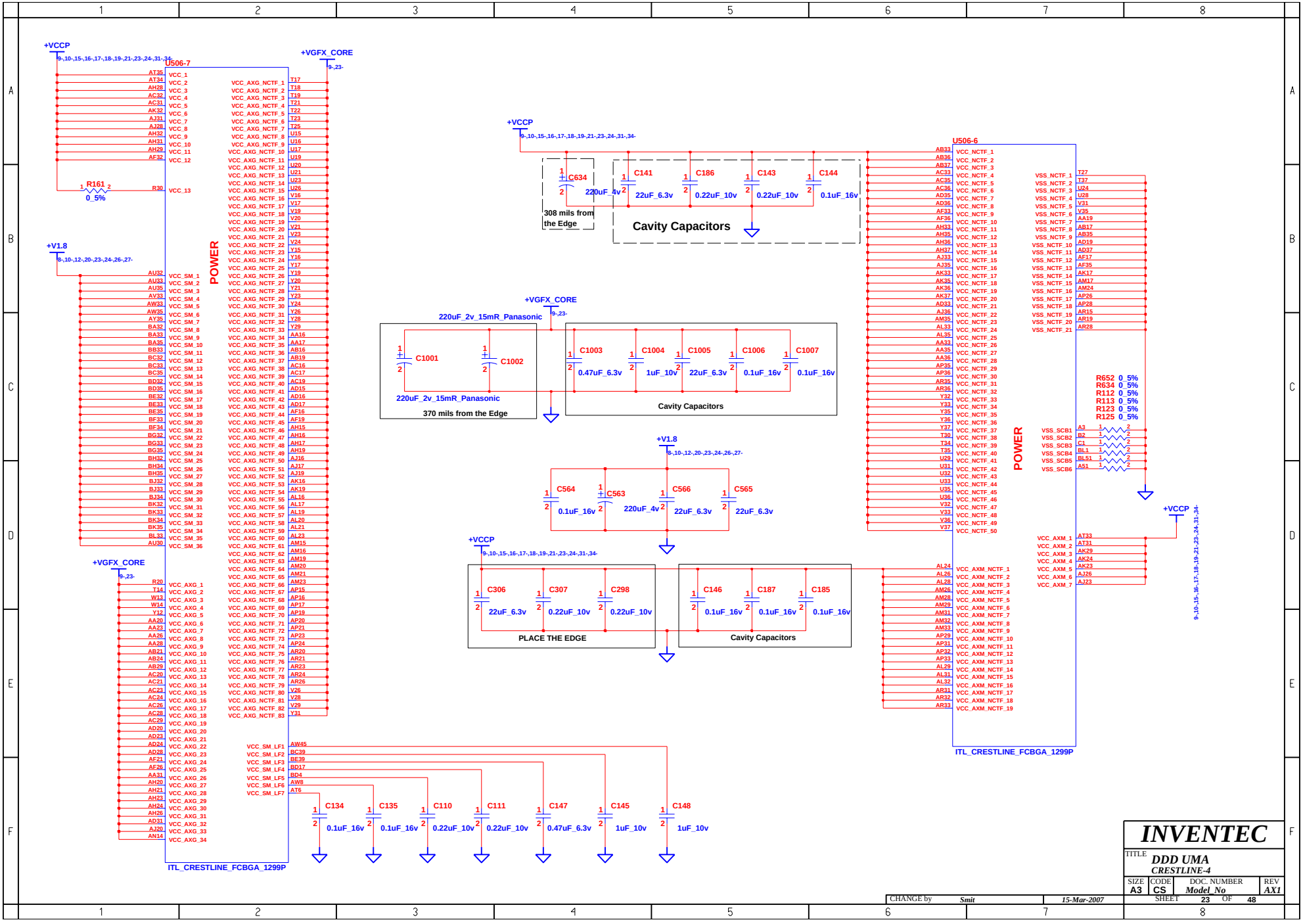


| | | | |
|---|---|---|---|
| CHANGE by | Smit | 15-Mar-2007 | |

INVENTEC

TITLE DDD UMA
CRESTLINE-4

| SIZE | CODE | DOC. NUMBER | REV |
|---|---|---|---|
| A3 | CS | Model_No | AX1 |

SHEET 23 OF 48

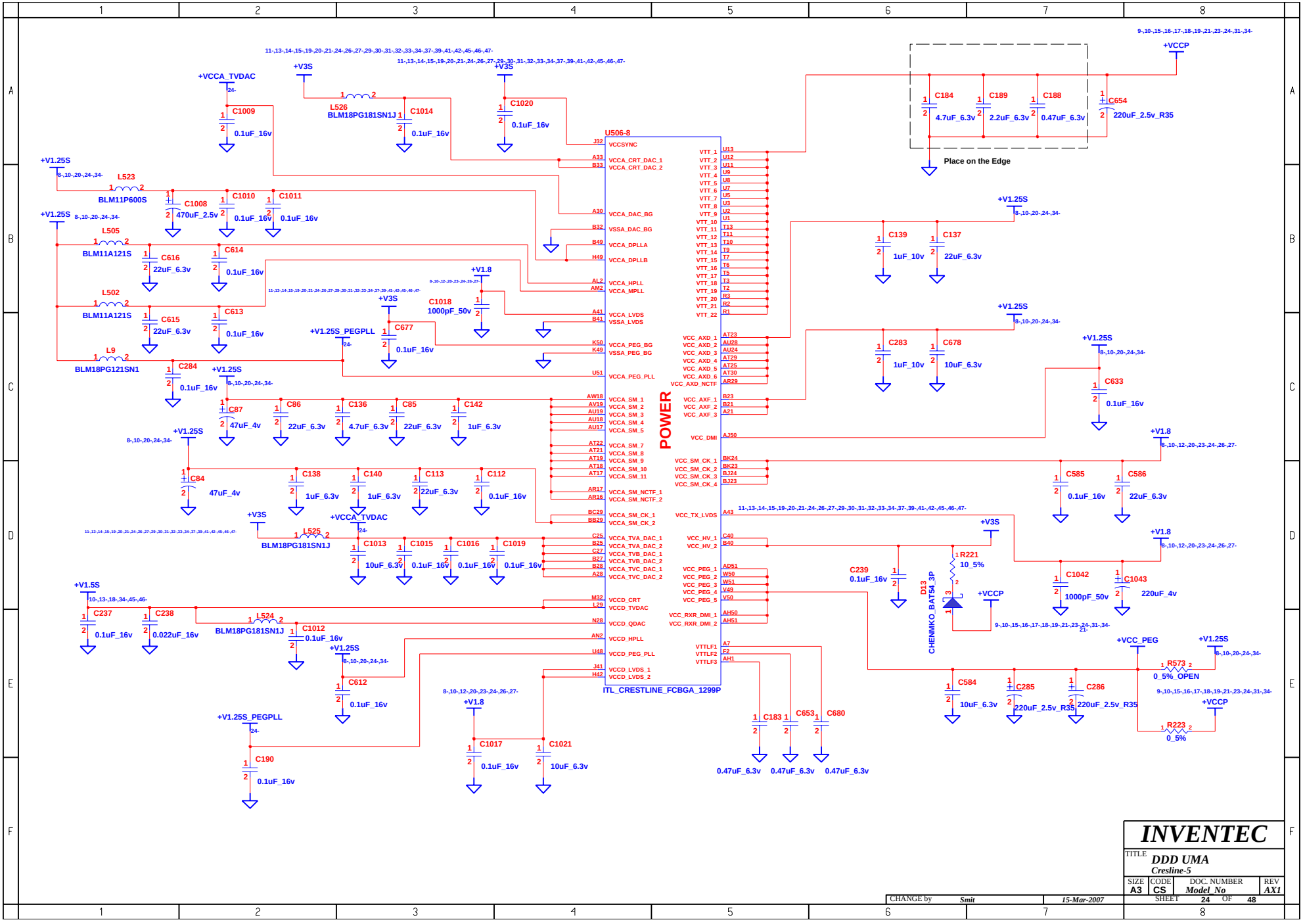
U506-8
POWER
ITL_CRESTLINE_FCBGA_1299P
VCCSYNC
VCCA_CRT_DAC_1
VCCA_CRT_DAC_2
VCCA_DAC_BG
VSSA_DAC_BG
VCCA_DPLLA
VCCA_DPLLB
VCCA_HPLL
VCCA_MPLL
VCCA_LVDS
VSSA_LVDS
VCCA_PEG_BG
VSSA_PEG_BG
VCCA_PEG_PLL
VCCA_SM_1
VCCA_SM_2
VCCA_SM_3
VCCA_SM_4
VCCA_SM_5
VCCA_SM_7
VCCA_SM_8
VCCA_SM_9
VCCA_SM_10
VCCA_SM_11
VCCA_SM_NCTF_1
VCCA_SM_NCTF_2
VCCA_SM_CK_1
VCCA_SM_CK_2
VCCA_TVA_DAC_1
VCCA_TVA_DAC_2
VCCA_TVB_DAC_1
VCCA_TVB_DAC_2
VCCA_TVC_DAC_1
VCCA_TVC_DAC_2
VCCD_CRT
VCCD_TVDAC
VCCD_QDAC
VCCD_HPLL
VCCD_PEG_PLL
VCCD_LVDS_1
VCCD_LVDS_2
VTT_1
VTT_2
VTT_3
VTT_4
VTT_5
VTT_6
VTT_7
VTT_8
VTT_9
VTT_10
VTT_11
VTT_12
VTT_13
VTT_14
VTT_15
VTT_16
VTT_17
VTT_18
VTT_19
VTT_20
VTT_21
VTT_22
VCC_AXD_1
VCC_AXD_2
VCC_AXD_3
VCC_AXD_4
VCC_AXD_5
VCC_AXD_6
VCC_AXD_NCTF
VCC_AXF_1
VCC_AXF_2
VCC_AXF_3
VCC_DMI
VCC_SM_CK_1
VCC_SM_CK_2
VCC_SM_CK_3
VCC_SM_CK_4
VCC_TX_LVDS
VCC_HV_1
VCC_HV_2
VCC_PEG_1
VCC_PEG_2
VCC_PEG_3
VCC_PEG_4
VCC_PEG_5
VCC_RXR_DMI_1
VCC_RXR_DMI_2
VTTLF1
VTTLF2
VTTLF3
+VCCA_TVDAC
+V3S
+V1.25S
+V1.5S
+V1.8
+V1.25S_PEGPLL
+VCCP
+VCC_PEG
Place on the Edge
L523 BLM11P600S
L505 BLM11A121S
L502 BLM11A121S
L9 BLM18PG121SN1
L526 BLM18PG181SN1J
L525 BLM18PG181SN1J
L524 BLM18PG181SN1J
D13 CHENMKO_BAT54_3P
R221 10_5%
R573 0_5%_OPEN
R223 0_5%
C184 4.7uF_6.3v
C189 2.2uF_6.3v
C188 0.47uF_6.3v
C654 220uF_2.5v_R35
C1009 0.1uF_16v
C1014 0.1uF_16v
C1020 0.1uF_16v
C1008 470uF_2.5v
C1010 0.1uF_16v
C1011 0.1uF_16v
C616 22uF_6.3v
C614 0.1uF_16v
C615 22uF_6.3v
C613 0.1uF_16v
C1018 1000pF_50v
C677 0.1uF_16v
C284 0.1uF_16v
C87 47uF_4v
C86 22uF_6.3v
C136 4.7uF_6.3v
C85 22uF_6.3v
C142 1uF_6.3v
C84 47uF_4v
C138 1uF_6.3v
C140 1uF_6.3v
C113 22uF_6.3v
C112 0.1uF_16v
C1013 10uF_6.3v
C1015 0.1uF_16v
C1016 0.1uF_16v
C1019 0.1uF_16v
C237 0.1uF_16v
C238 0.022uF_16v
C1012 0.1uF_16v
C612 0.1uF_16v
C190 0.1uF_16v
C1017 0.1uF_16v
C1021 10uF_6.3v
C183 0.47uF_6.3v
C653 0.47uF_6.3v
C680 0.47uF_6.3v
C139 1uF_10v
C137 22uF_6.3v
C283 1uF_10v
C678 10uF_6.3v
C633 0.1uF_16v
C585 0.1uF_16v
C586 22uF_6.3v
C239 0.1uF_16v
C1042 1000pF_50v
C1043 220uF_4v
C584 10uF_6.3v
C285 220uF_2.5v_R35
C286 220uF_2.5v_R35
INVENTEC
TITLE DDD UMA
Cresline-5
SIZE A3
CODE CS
DOC. NUMBER Model_No
REV AX1
SHEET 24 OF 48
CHANGE by Smit
15-Mar-2007

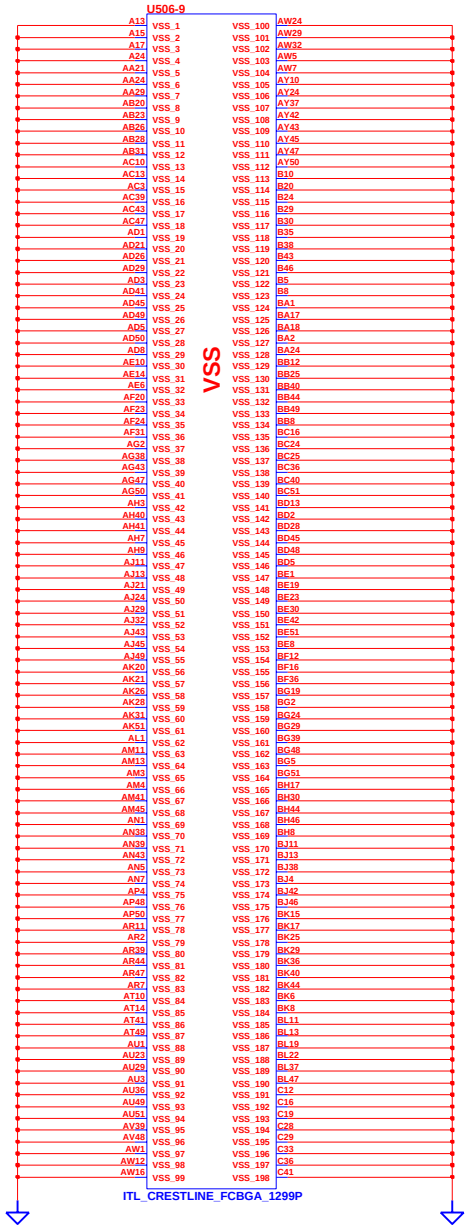


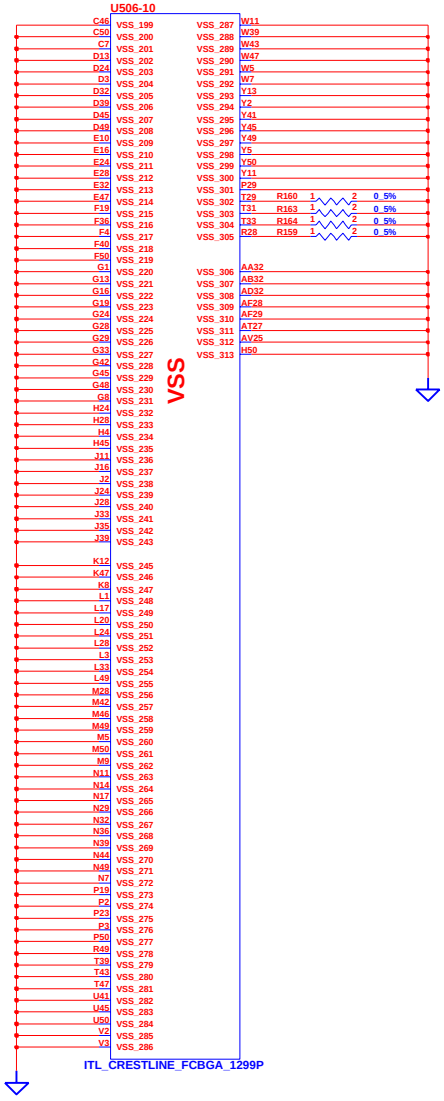


| | | | |
|---|---|---|---|
| INVENTEC | | | |
| TITLE DDD UMA CRESTLINE-6 | | | |
| SIZE A3 | CODE CS | DOC. NUMBER Model_No | REV AX1 |
| CHANGE by Smit | 15-Mar-2007 | SHEET 25 OF 48 | |

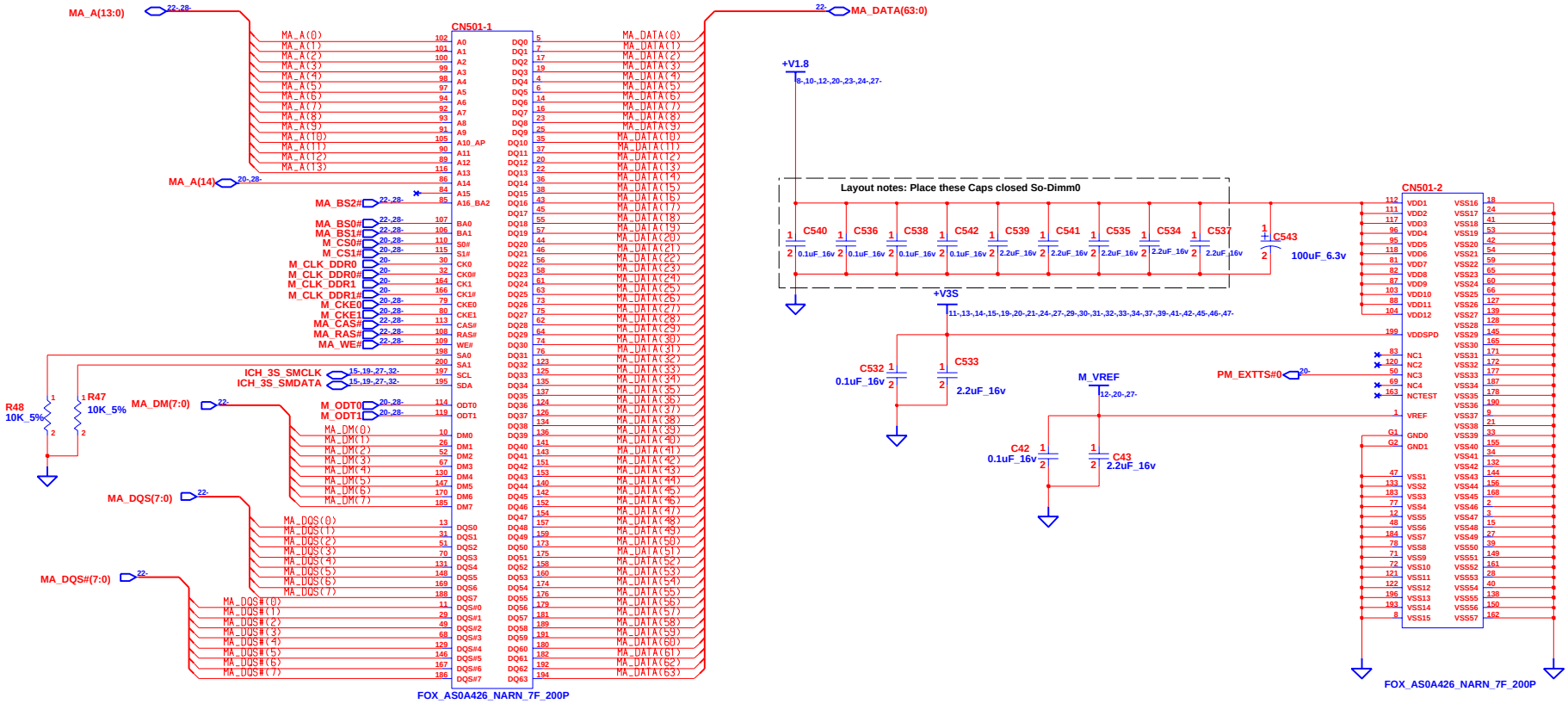


# SO DIMM0_9.2mm

| | | | |
|---|---|---|---|
| INVENTEC | | | |
| TITLE DDD UMA DDR2-DIMM-0 | | | |
| SIZE A3 | CODE CS | DOC. NUMBER Model_No | REV AX1 |
| CHANGE by Smit | 15-Mar-2007 | SHEET 26 OF 48 | |

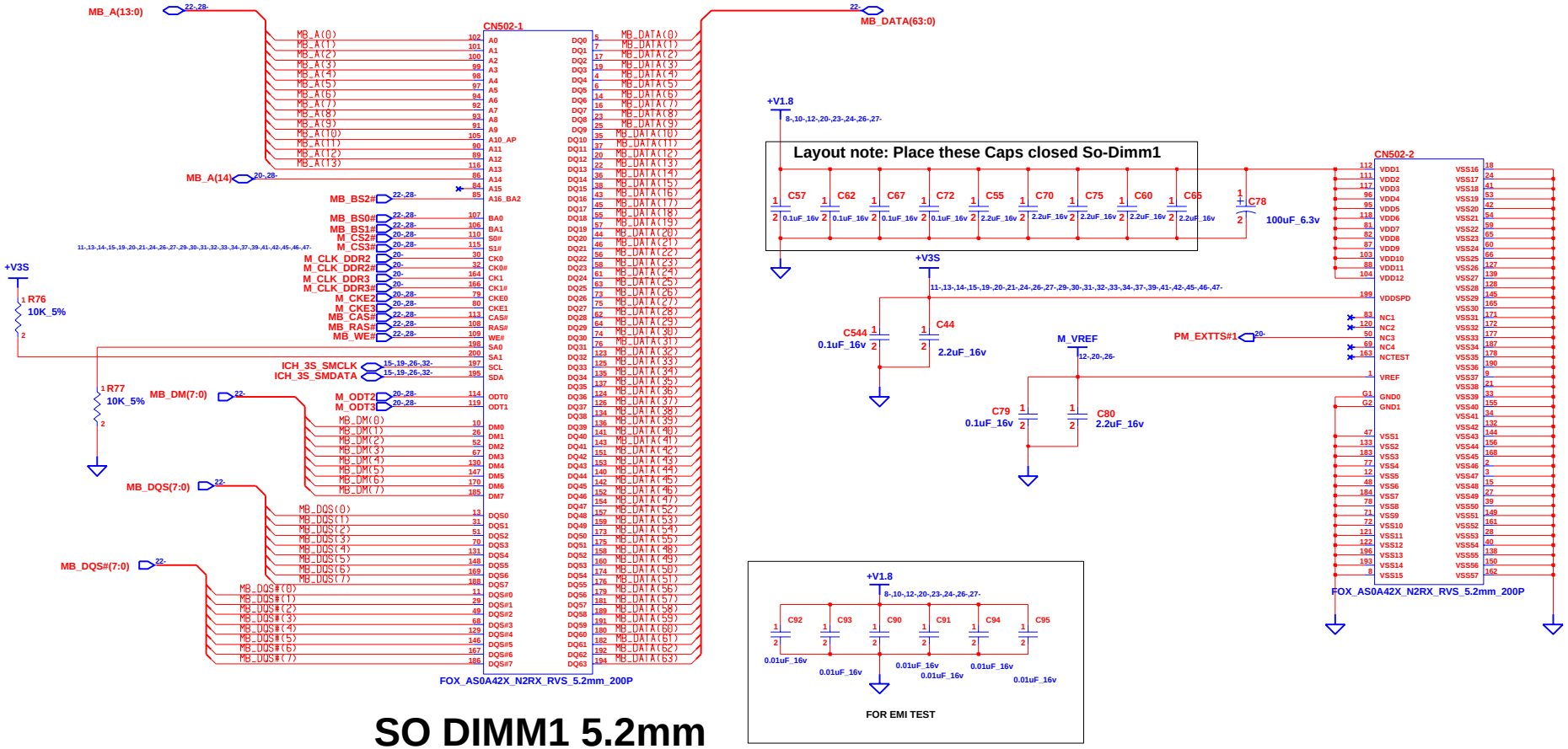


# SO DIMM1 5.2mm

| | | | |
|---|---|---|---|
| CHANGE by | Smit | 2-Apr-2007 | |

**INVENTEC**

TITLE: DDD UMA
DDR2-DIMM1

| SIZE | CODE | DOC. NUMBER | REV |
|---|---|---|---|
| A3 | CS | Model_No | AX1 |

SHEET 27 OF 48

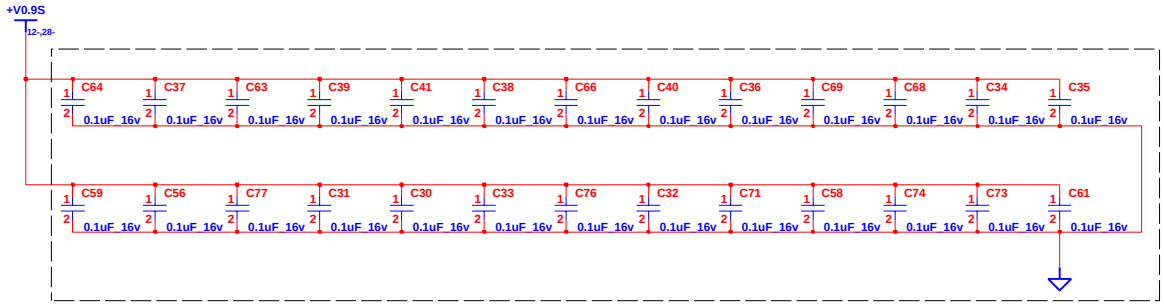


**LAYOUT NOTES : PLACE ONE CAP CLOSE TO EVERY 2 PULL UP RESISTOR TERMINATED TO +V0.9S**

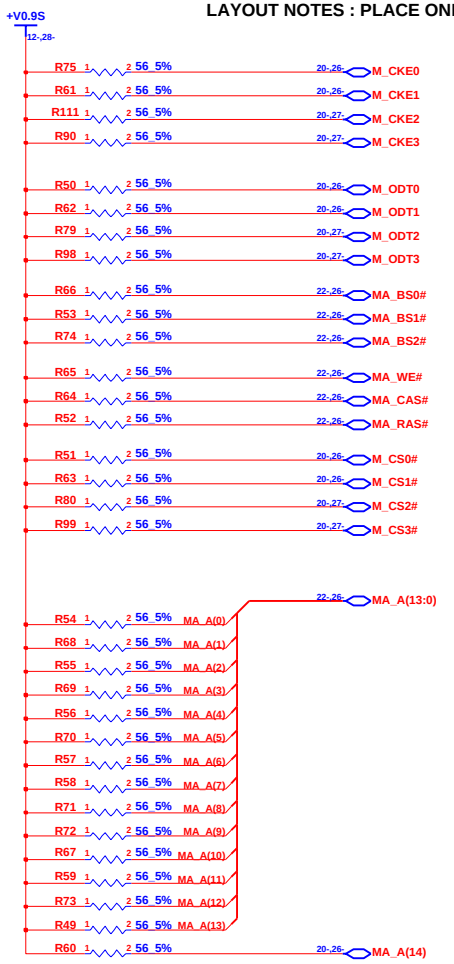


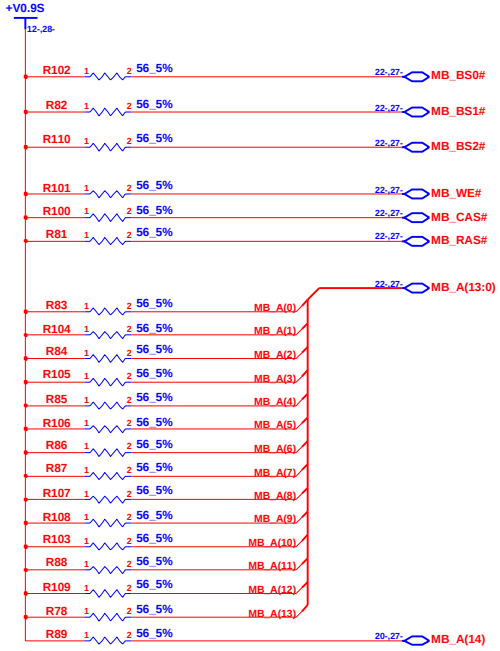


| | | | |
|---|---|---|---|
| CHANGE by | Smit | 27-Sep-2003 | |

**INVENTEC**

TITLE **DDD UMA**
*DDR2-DAMPING*

| SIZE | CODE | DOC. NUMBER | REV |
|---|---|---|---|
| A3 | CS | Model_No | AX1 |

SHEET 28 OF 48

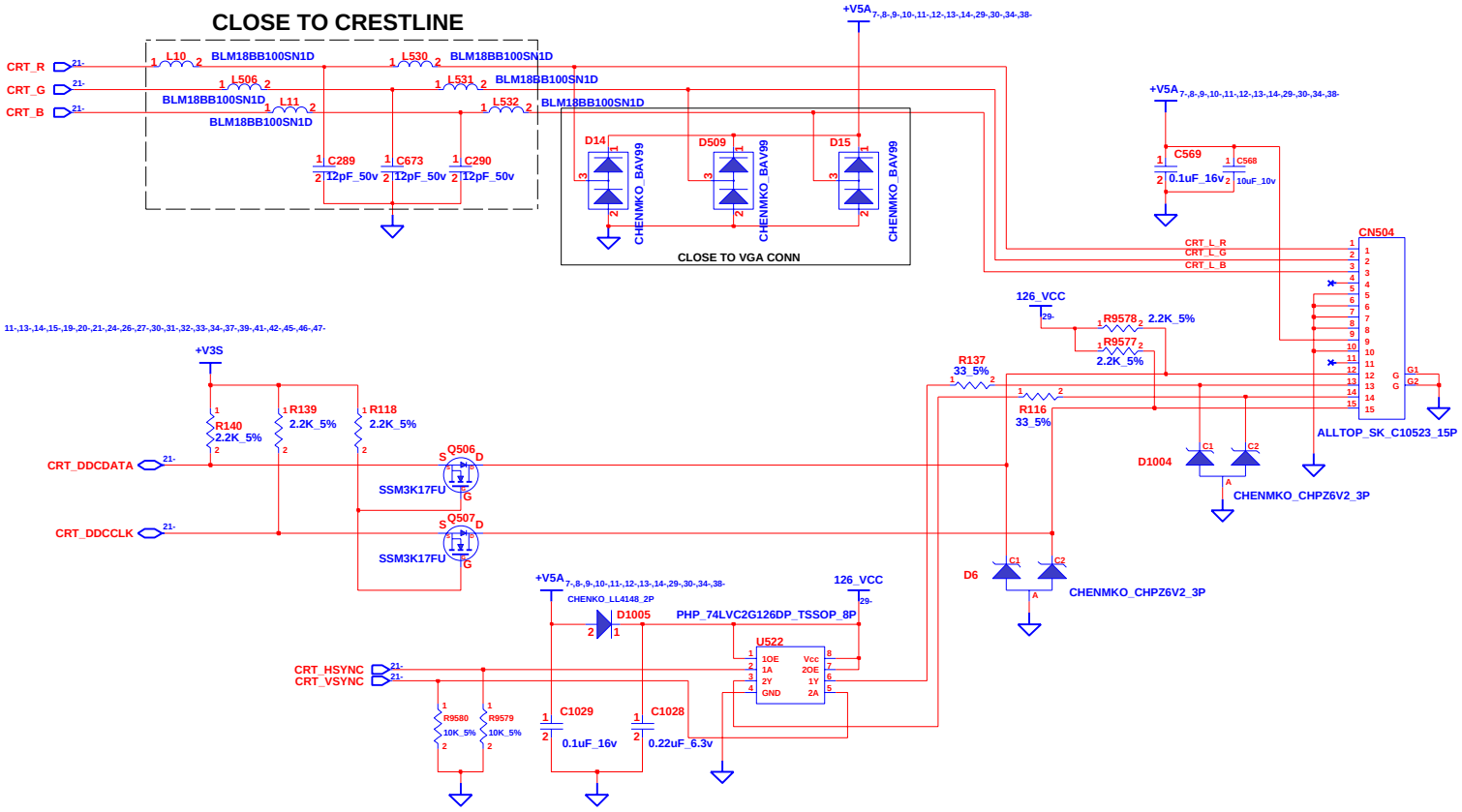


# INVENTEC

TITLE **DDD UMA**
*VGA CONN*

| SIZE | CODE | DOC. NUMBER | REV |
|---|---|---|---|
| A3 | CS | *Model_No* | *AX1* |

SHEET 29 OF 48

CHANGE by *Smit* *23-Mar-2007*

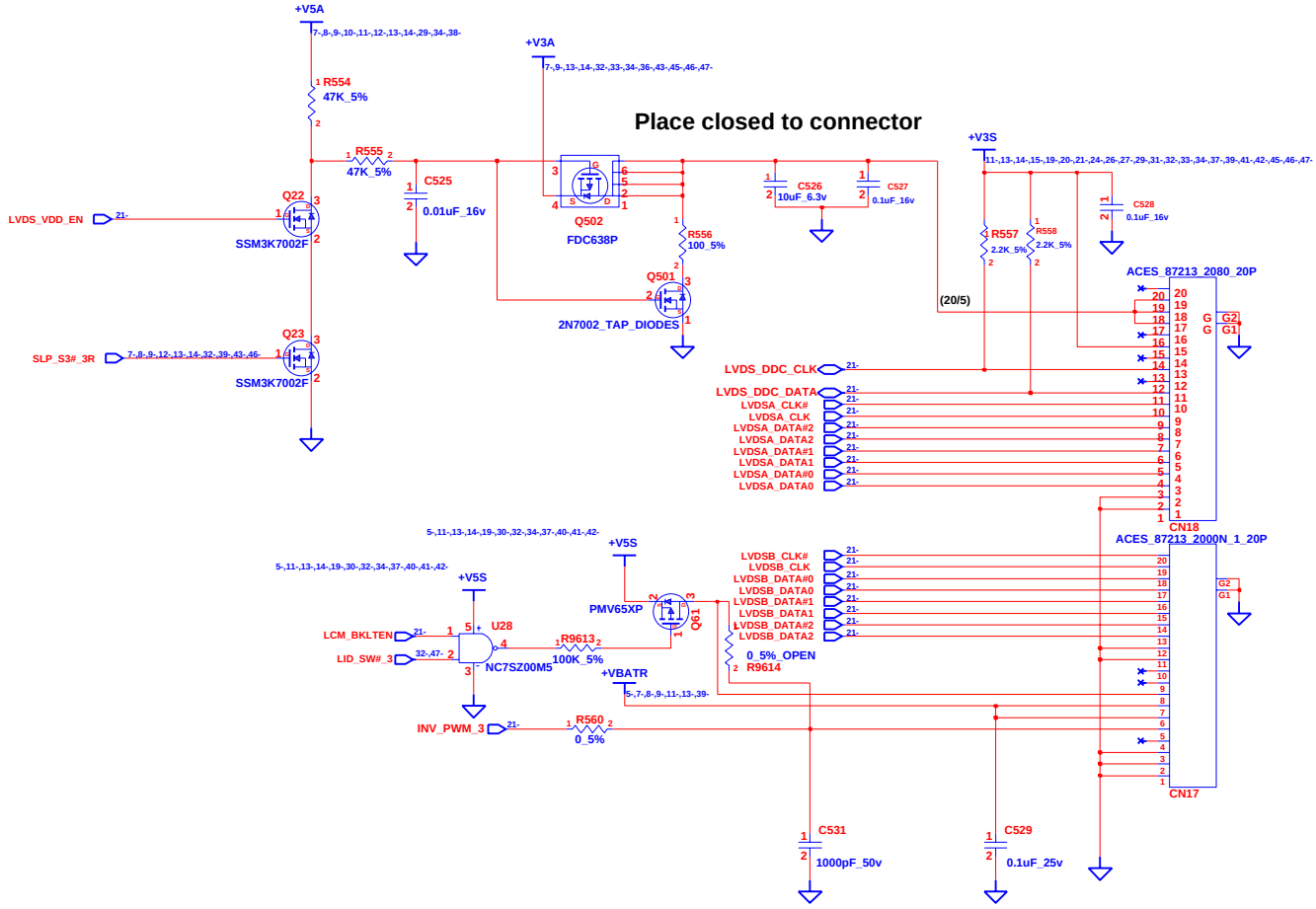


| | | | |
|---|---|---|---|
| INVENTEC | | | |
| TITLE DDD UMA LCM CONN | | | |
| SIZE A3 | CODE CS | DOC. NUMBER Model_No | REV AX1 |
| CHANGE by Smit | 26-Mar-2007 | SHEET 30 OF 48 | |

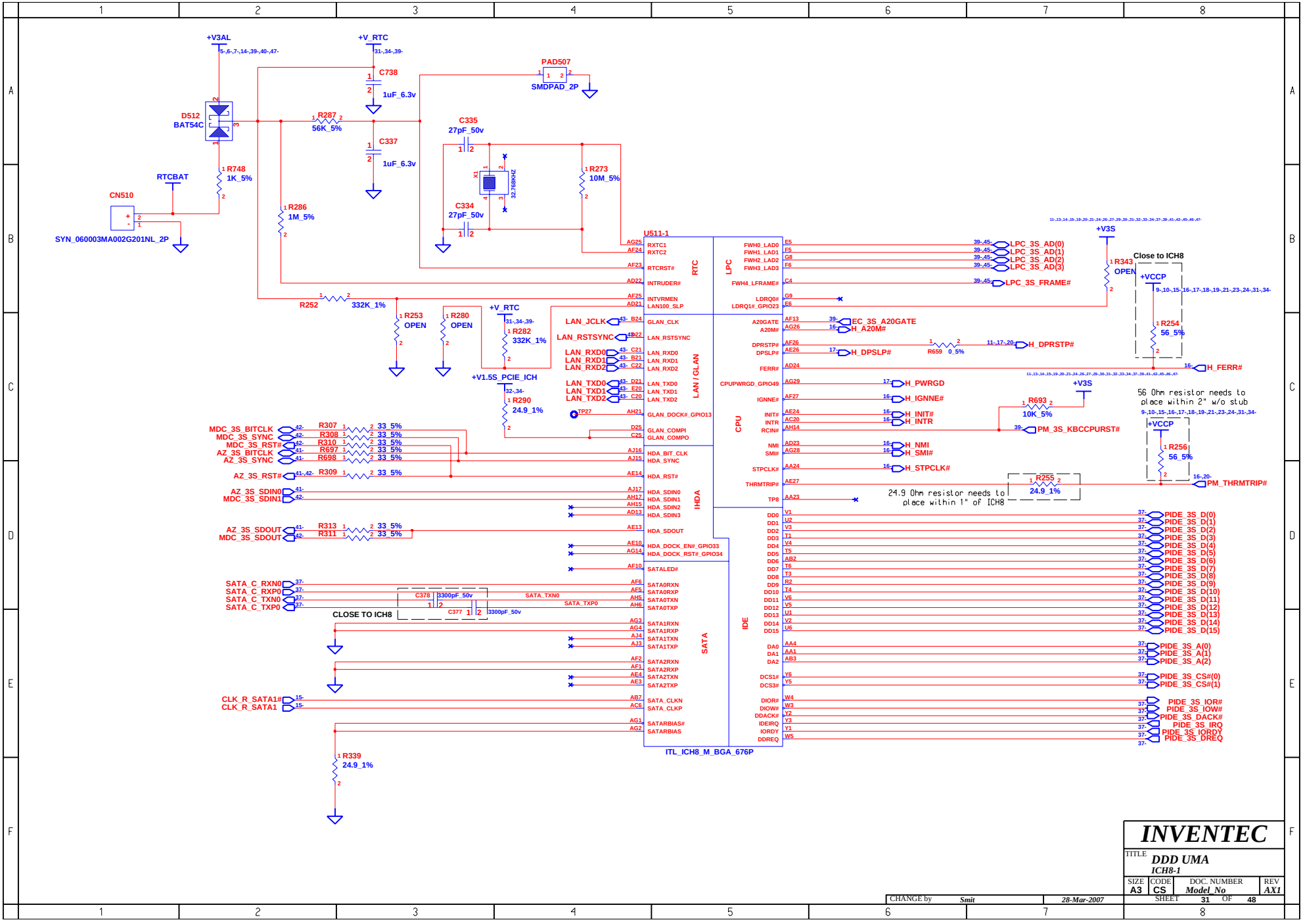
+V3AL
+V_RTC
C738
1uF_6.3v
PAD507
SMDPAD_2P
D512
BAT54C
R287
56K_5%
C337
1uF_6.3v
C335
27pF_50v
X1
32.768KHZ
R273
10M_5%
C334
27pF_50v
R748
1K_5%
RTCBAT
CN510
SYN_060003MA002G201NL_2P
R286
1M_5%
R252
332K_1%
R253
OPEN
R280
OPEN
R282
332K_1%
+V1.5S_PCIE_ICH
R290
24.9_1%
U511-1
RTC
LPC
LAN / GLAN
CPU
IHDA
IDE
SATA
ITL_ICH8_M_BGA_676P
LPC_3S_AD(0)
LPC_3S_AD(1)
LPC_3S_AD(2)
LPC_3S_AD(3)
LPC_3S_FRAME#
R343
OPEN
Close to ICH8
+VCCP
R254
56_5%
EC_3S_A20GATE
H_A20M#
H_DPRSTP#
H_DPSLP#
R659 0_5%
H_FERR#
H_PWRGD
H_IGNNE#
R693
10K_5%
56 Ohm resistor needs to place within 2" w/o stub
H_INIT#
H_INTR
PM_3S_KBCCPURST#
H_NMI
H_SMI#
H_STPCLK#
R256
56_5%
PM_THRMTRIP#
R255
24.9_1%
24.9 Ohm resistor needs to place within 1" of ICH8
LAN_JCLK
LAN_RSTSYNC
LAN_RXD0
LAN_RXD1
LAN_RXD2
LAN_TXD0
LAN_TXD1
LAN_TXD2
MDC_3S_BITCLK
MDC_3S_SYNC
MDC_3S_RST#
AZ_3S_BITCLK
AZ_3S_SYNC
AZ_3S_RST#
AZ_3S_SDIN0
MDC_3S_SDIN1
AZ_3S_SDOUT
MDC_3S_SDOUT
R307
R308
R310
R697
R698
R309
R313
R311
33_5%
SATA_C_RXN0
SATA_C_RXP0
SATA_C_TXN0
SATA_C_TXP0
C378
3300pF_50v
C377
3300pF_50v
SATA_TXN0
SATA_TXP0
CLOSE TO ICH8
CLK_R_SATA1#
CLK_R_SATA1
R339
24.9_1%
PIDE_3S_D(0)
PIDE_3S_D(1)
PIDE_3S_D(2)
PIDE_3S_D(3)
PIDE_3S_D(4)
PIDE_3S_D(5)
PIDE_3S_D(6)
PIDE_3S_D(7)
PIDE_3S_D(8)
PIDE_3S_D(9)
PIDE_3S_D(10)
PIDE_3S_D(11)
PIDE_3S_D(12)
PIDE_3S_D(13)
PIDE_3S_D(14)
PIDE_3S_D(15)
PIDE_3S_A(0)
PIDE_3S_A(1)
PIDE_3S_A(2)
PIDE_3S_CS#(0)
PIDE_3S_CS#(1)
PIDE_3S_IOR#
PIDE_3S_IOW#
PIDE_3S_DACK#
PIDE_3S_IRQ
PIDE_3S_IORDY
PIDE_3S_DREQ
INVENTEC
TITLE
DDD UMA
ICH8-1
SIZE A3
CODE CS
DOC. NUMBER Model_No
REV AX1
SHEET 31 OF 48
CHANGE by Smit
28-Mar-2007

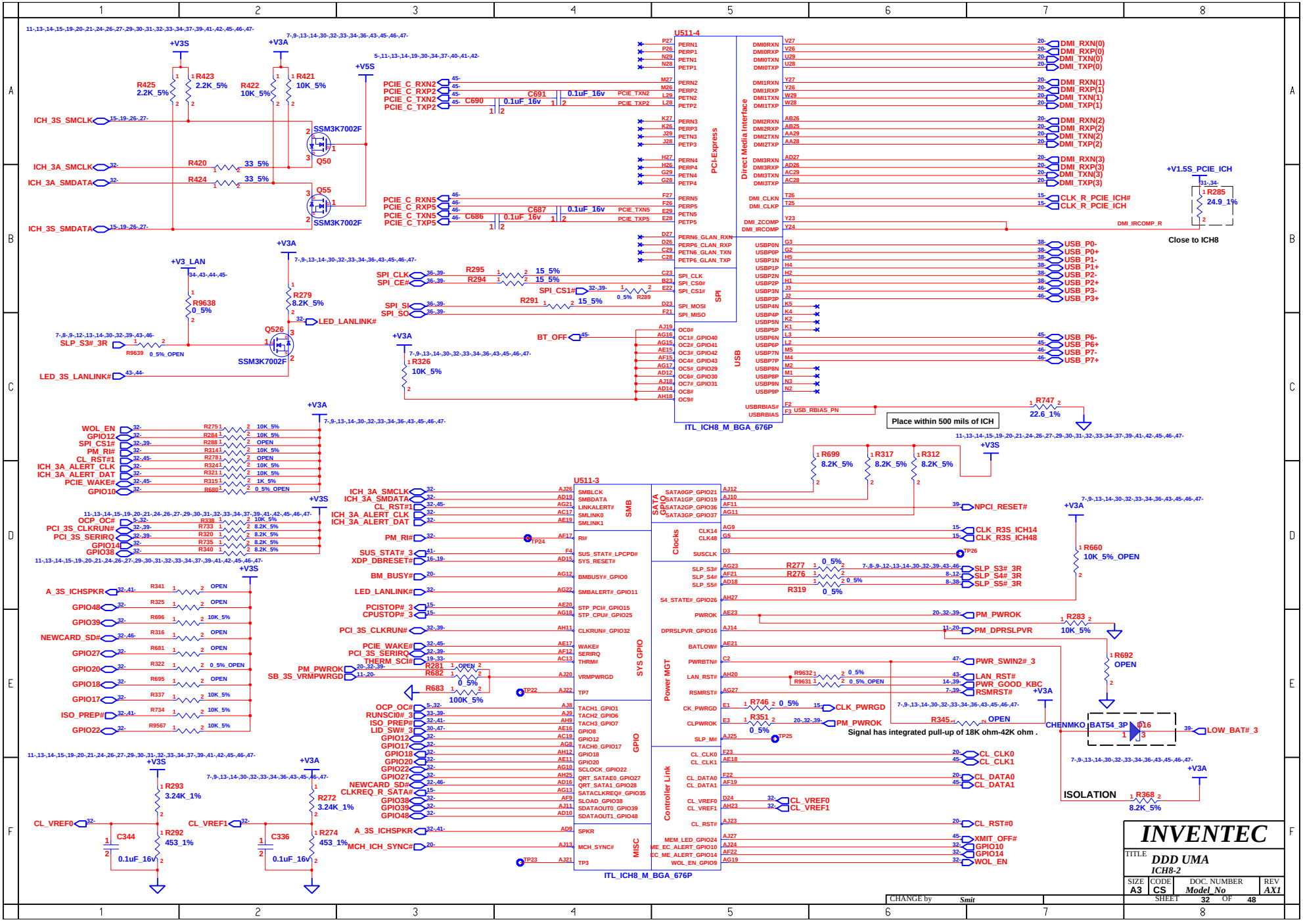
U511-4
PCI-Express
Direct Media Interface
SPI
USB
ITL_ICH8_M_BGA_676P
U511-3
SMB
SATA GPIO
Clocks
Power MGT
SYS GPIO
GPIO
Controller Link
MISC
ITL_ICH8_M_BGA_676P
Place within 500 mils of ICH
Close to ICH8
Signal has integrated pull-up of 18K ohm-42K ohm .
ISOLATION
INVENTEC
TITLE
DDD UMA
ICH8-2
SIZE A3
CODE CS
DOC. NUMBER Model_No
REV AX1
SHEET 32 OF 48
CHANGE by Smit

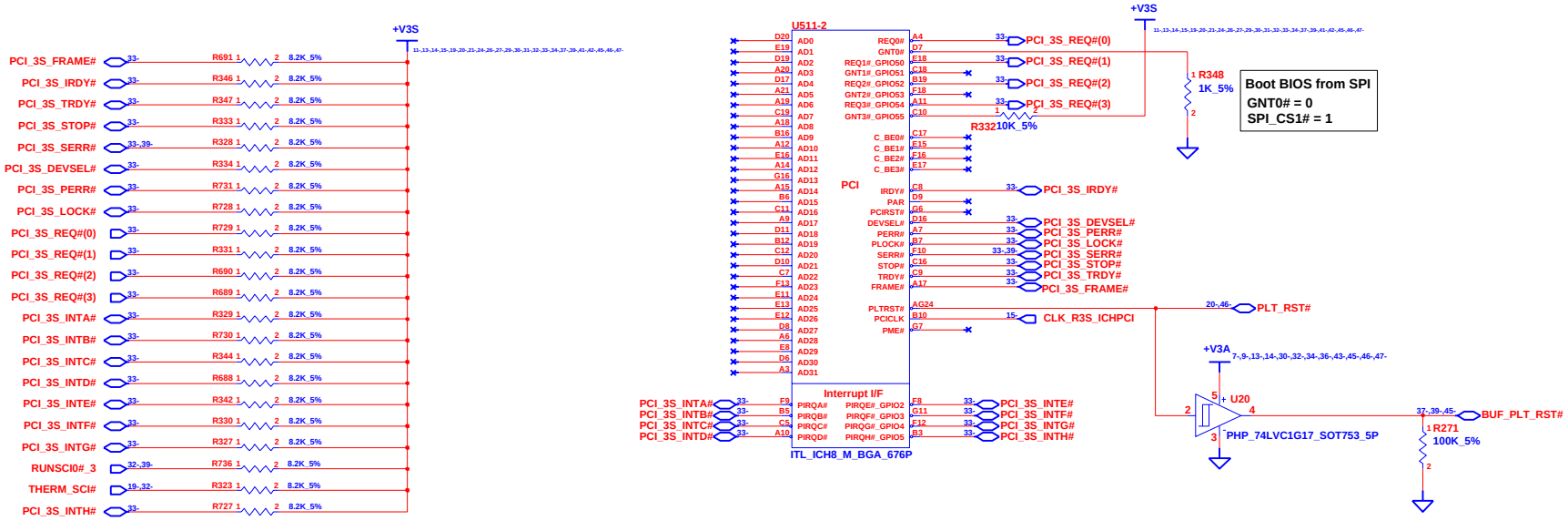


# INVENTEC

TITLE **DDD UMA**
**ICH8-3**

| SIZE | CODE | DOC. NUMBER | REV |
|---|---|---|---|
| A3 | CS | Model_No | AX1 |

CHANGE by Smit 15-Mar-2007

SHEET 33 OF 48

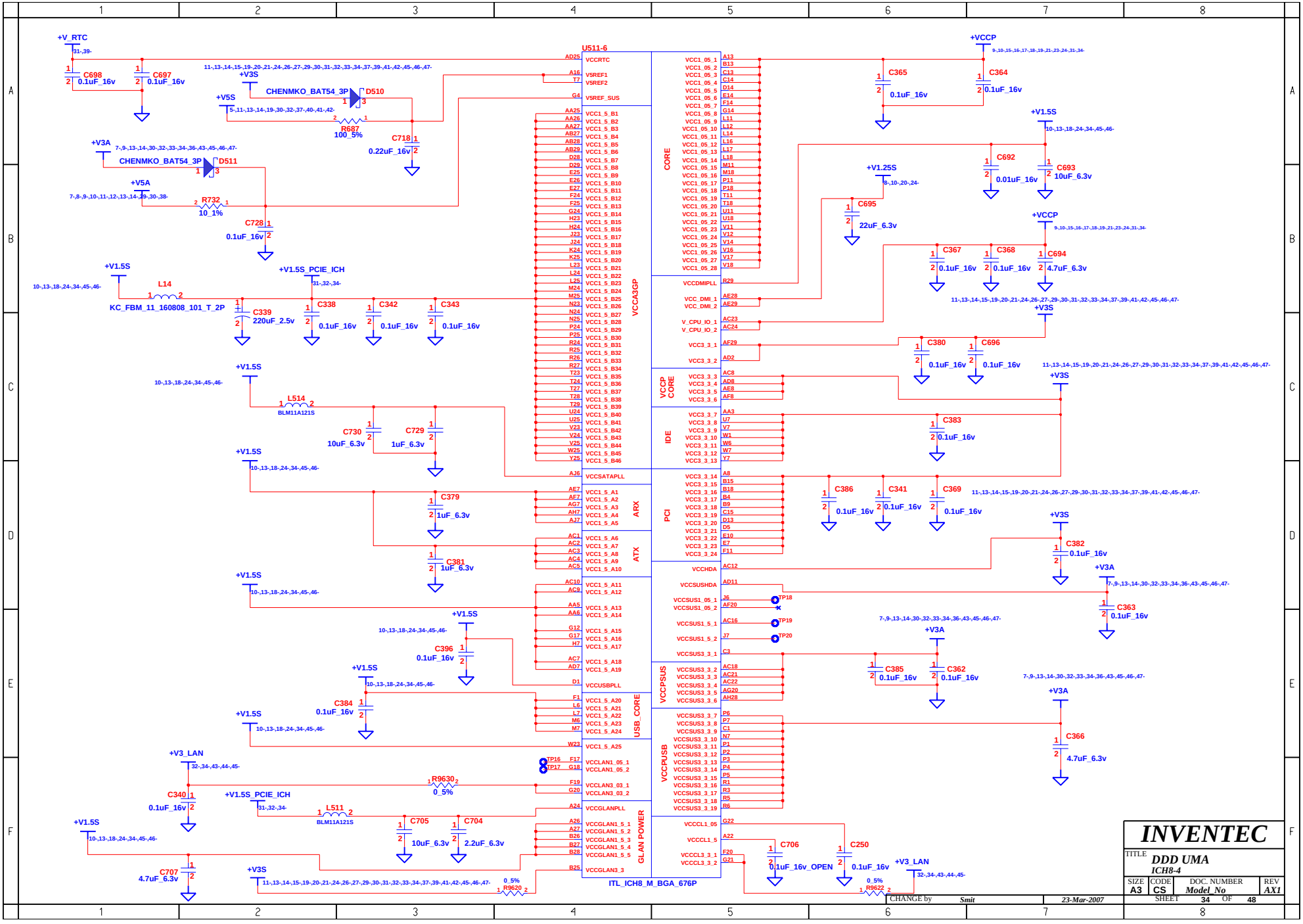


INVENTEC

TITLE DDD UMA
ICH8-4

| SIZE | CODE | DOC. NUMBER | REV |
|---|---|---|---|
| A3 | CS | Model_No | AX1 |

SHEET 34 OF 48

CHANGE by Smit 23-Mar-2007

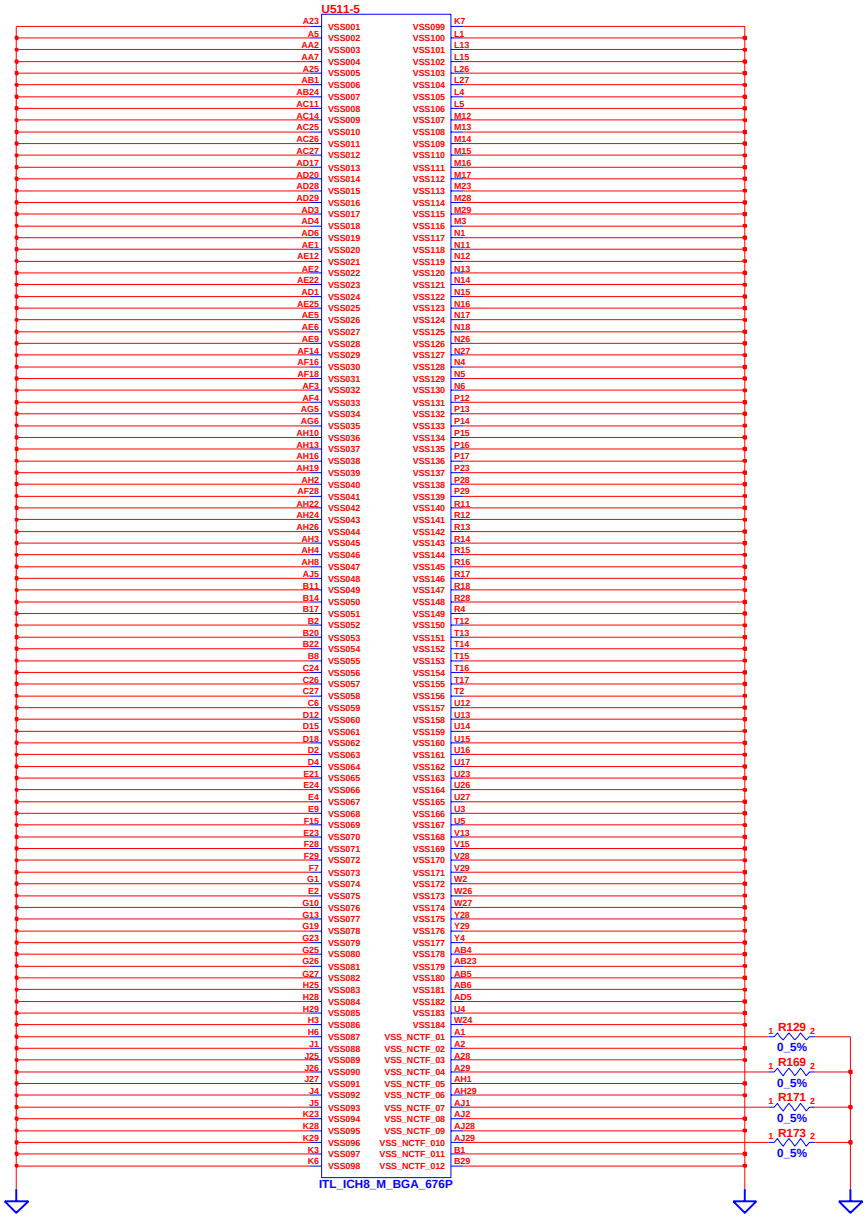


| | | | |
|---|---|---|---|
| CHANGE by | Smit | 15-Mar-2007 | |

**INVENTEC**

TITLE: DDD UMA
ICH8-5

| SIZE | CODE | DOC. NUMBER | REV |
|---|---|---|---|
| A3 | CS | Model_No | AX1 |

SHEET 35 OF 48

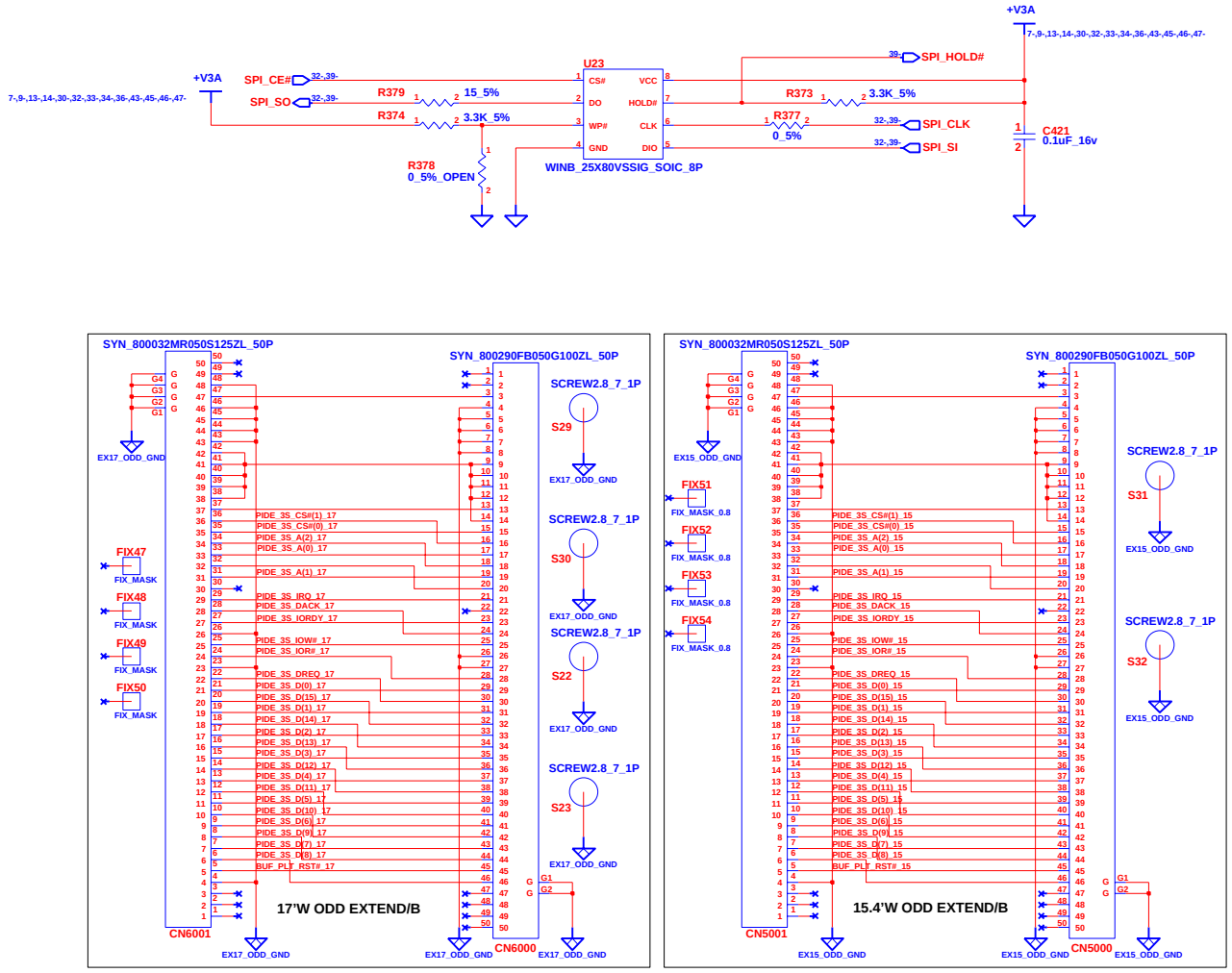


# INVENTEC

TITLE
**DDD UMA**
**SYSTEM BIOS&ODD EXT/B**

| SIZE | CODE | DOC. NUMBER | REV |
|---|---|---|---|
| A3 | CS | Model_No | AX1 |

CHANGE by Smit 15-Mar-2007

SHEET 36 OF 48

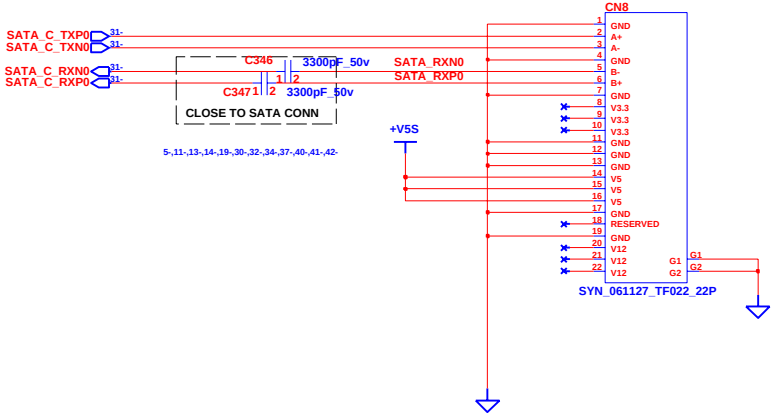


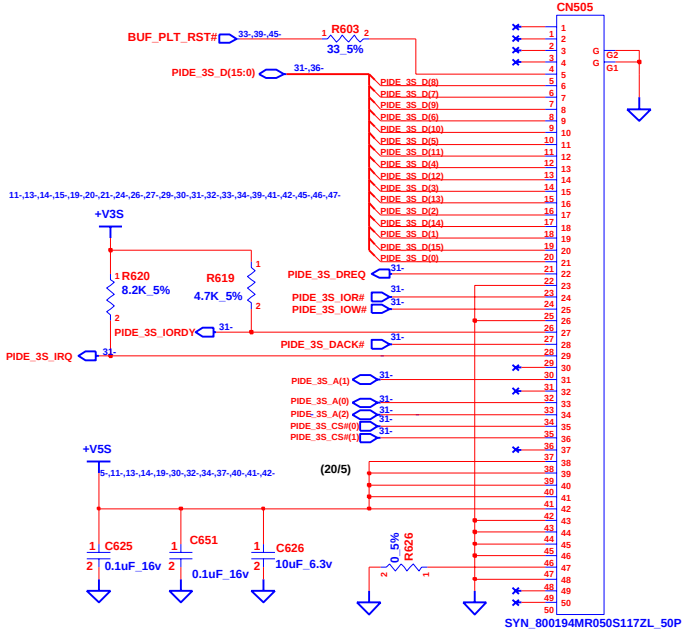


# INVENTEC

TITLE **DDD UMA**
**HDD & ODD CONN**

| SIZE | CODE | DOC. NUMBER | REV |
|---|---|---|---|
| A3 | CS | Model_No | AX1 |

SHEET 37 OF 48

CHANGE by Smit 15-Mar-2007

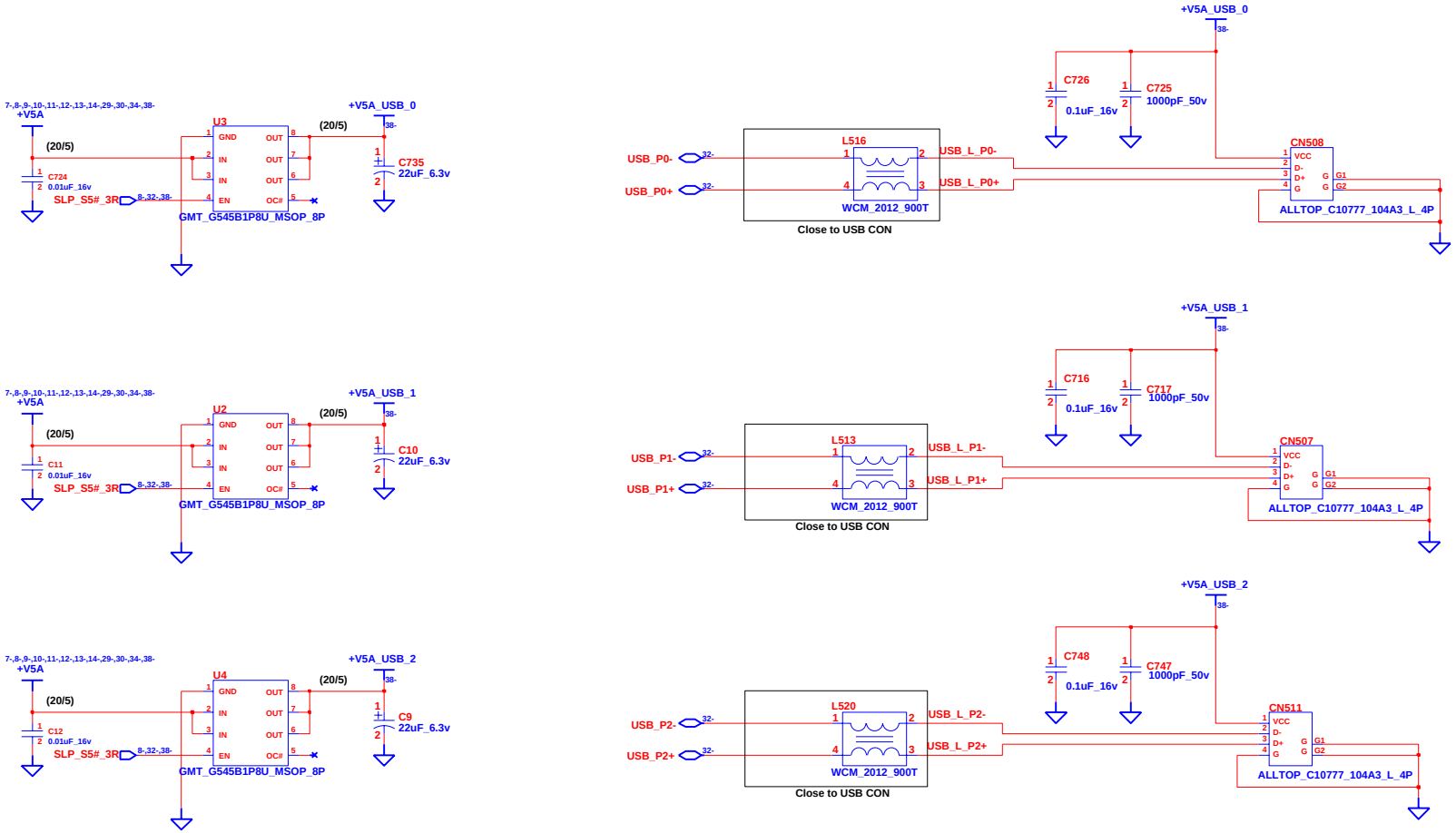


Close to USB CON

# INVENTEC

TITLE **DDD UMA**
*USB CONN*

| SIZE | CODE | DOC. NUMBER | REV |
|---|---|---|---|
| A3 | CS | *Model_No* | *AX1* |

SHEET 38 OF 48

CHANGE by *Smit* *15-Mar-2007*

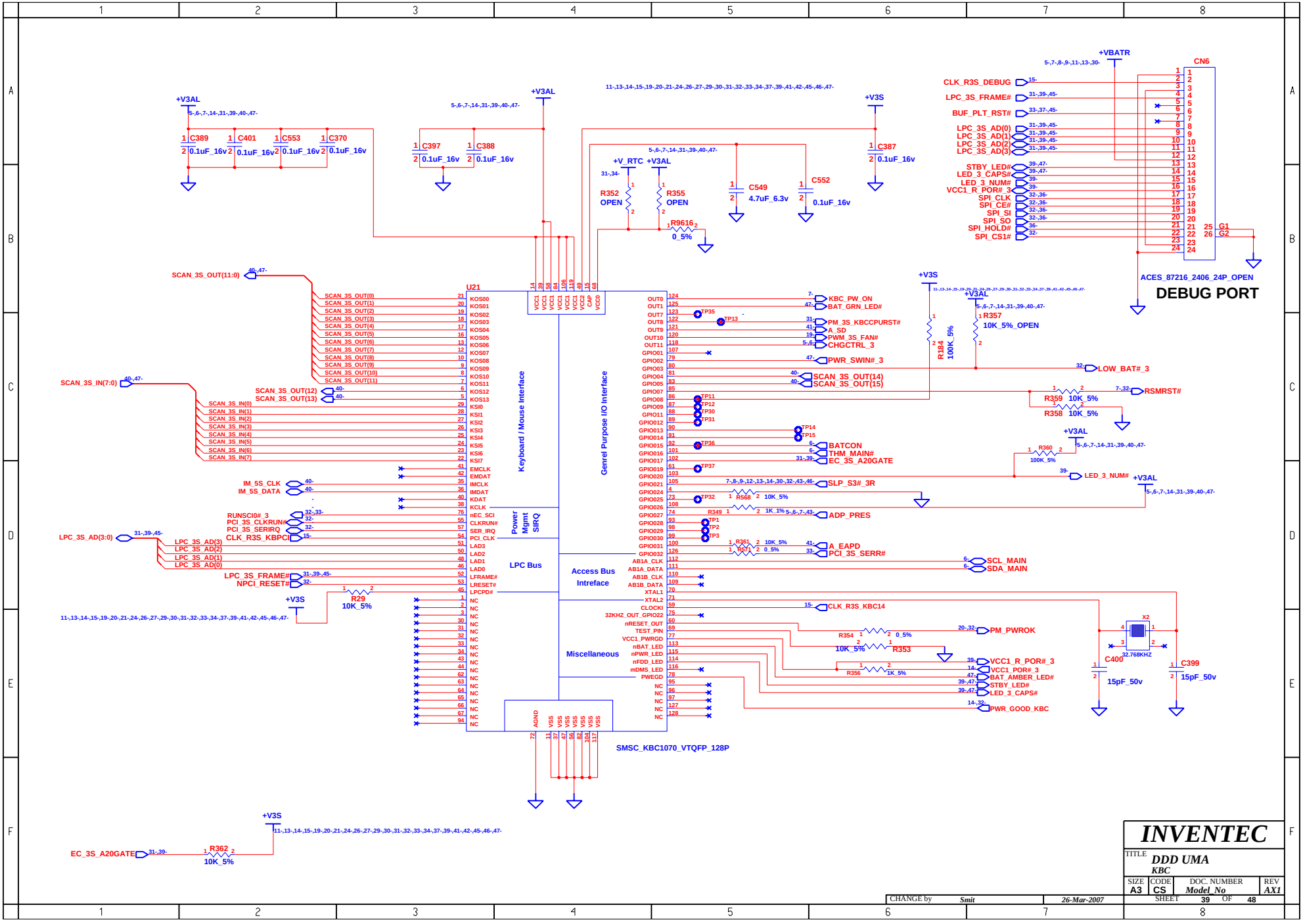
U21
SMSC_KBC1070_VTQFP_128P
Keyboard / Mouse Interface
Genrel Purpose I/O Interface
Power Mgmt SIRQ
LPC Bus
Access Bus Intreface
Miscellaneous
CN6
ACES_87216_2406_24P_OPEN
DEBUG PORT
+V3AL
+V3S
+VBATR
+V_RTC
C389 0.1uF_16v
C401 0.1uF_16v
C553 0.1uF_16v
C370 0.1uF_16v
C397 0.1uF_16v
C388 0.1uF_16v
C387 0.1uF_16v
C549 4.7uF_6.3v
C552 0.1uF_16v
R352 OPEN
R355 OPEN
R9616 0_5%
R357 10K_5%_OPEN
R184 100K_5%
R359 10K_5%
R358 10K_5%
R360 100K_5%
R29 10K_5%
R362 10K_5%
R568 10K_5%
R349 1K_1%
R361 10K_5%
R571 0_5%
R354 0_5%
R353 10K_5%
R356 1K_5%
X2 32.768KHZ
C400 15pF_50v
C399 15pF_50v
SCAN_3S_OUT(11:0)
SCAN_3S_IN(7:0)
LPC_3S_AD(3:0)
EC_3S_A20GATE
CLK_R3S_DEBUG
LPC_3S_FRAME#
BUF_PLT_RST#
LPC_3S_AD(0)
LPC_3S_AD(1)
LPC_3S_AD(2)
LPC_3S_AD(3)
STBY_LED#
LED_3_CAPS#
LED_3_NUM#
VCC1_R_POR#_3
SPI_CLK
SPI_CE#
SPI_SI
SPI_SO
SPI_HOLD#
SPI_CS1#
KBC_PW_ON
BAT_GRN_LED#
PM_3S_KBCCPURST#
A_SD
PWM_3S_FAN#
CHGCTRL_3
PWR_SWIN#_3
LOW_BAT#_3
SCAN_3S_OUT(14)
SCAN_3S_OUT(15)
RSMRST#
BATCON
THM_MAIN#
EC_3S_A20GATE
LED_3_NUM#
SLP_S3#_3R
ADP_PRES
A_EAPD
PCI_3S_SERR#
SCL_MAIN
SDA_MAIN
CLK_R3S_KBC14
PM_PWROK
VCC1_R_POR#_3
VCC1_POR#_3
BAT_AMBER_LED#
STBY_LED#
LED_3_CAPS#
PWR_GOOD_KBC
IM_5S_CLK
IM_5S_DATA
RUNSCI0#_3
PCI_3S_CLKRUN#
PCI_3S_SERIRQ
CLK_R3S_KBPCI
LPC_3S_FRAME#
NPCI_RESET#
INVENTEC
TITLE DDD UMA
KBC
SIZE A3
CODE CS
DOC. NUMBER Model_No
REV AX1
SHEET 39 OF 48
CHANGE by Smit
26-Mar-2007

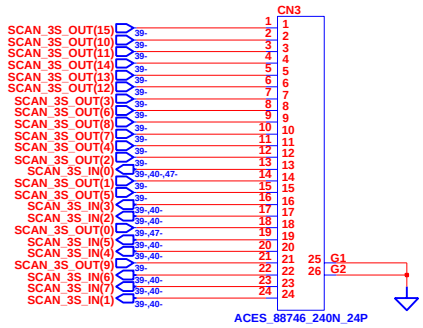


KEYBOARD CONN

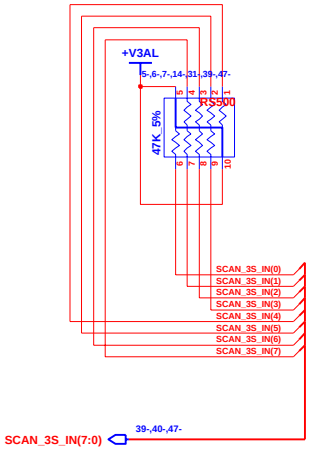


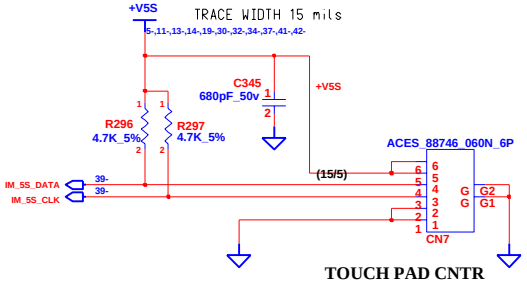


TOUCH PAD CNTR

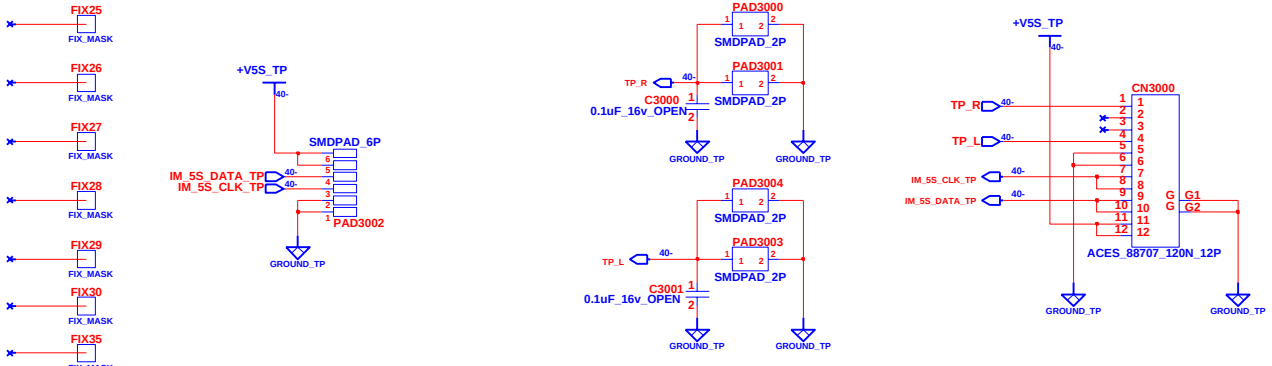


TOUCH PAD BOARD

| INVENTEC | | | |
|---|---|---|---|
| TITLE DDD UMA KB & TP CONN | | | |
| SIZE A3 | CODE CS | DOC. NUMBER Model_No | REV AX1 |
| CHANGE by Smit | 15-Mar-2007 | SHEET 40 OF 48 | |

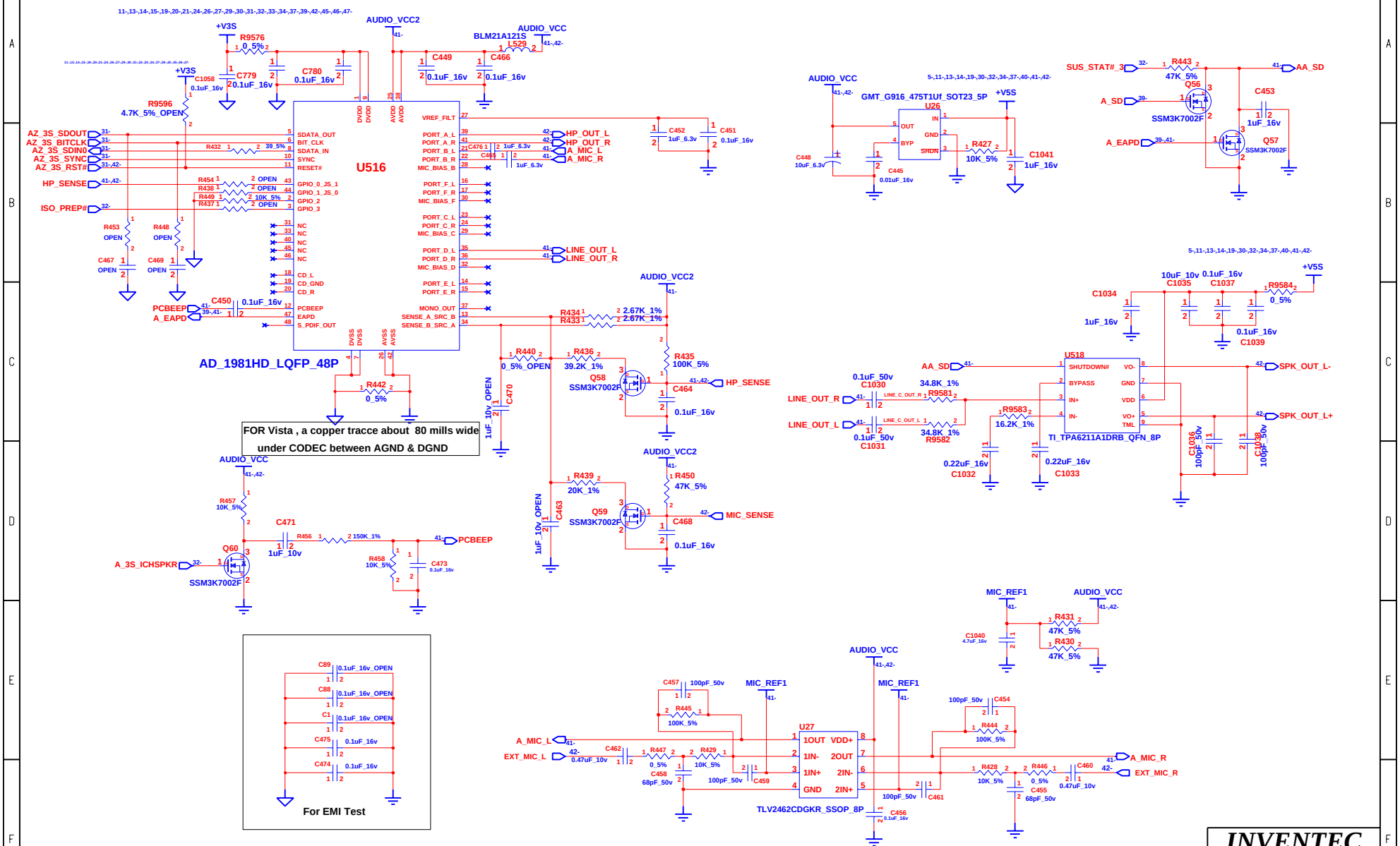
U516
AD_1981HD_LQFP_48P
AZ_3S_SDOUT
AZ_3S_BITCLK
AZ_3S_SDIN0
AZ_3S_SYNC
AZ_3S_RST#
HP_SENSE
ISO_PREP#
PCBEEP
A_EAPD
HP_OUT_L
HP_OUT_R
A_MIC_L
A_MIC_R
LINE_OUT_L
LINE_OUT_R
AUDIO_VCC2
AUDIO_VCC
+V3S
+V5S
FOR Vista , a copper tracce about 80 mills wide under CODEC between AGND & DGND
U26
GMT_G916_475T1Uf_SOT23_5P
SUS_STAT#_3
AA_SD
A_EAPD
SSM3K7002F
U518
TI_TPA6211A1DRB_QFN_8P
SPK_OUT_L-
SPK_OUT_L+
HP_SENSE
MIC_SENSE
PCBEEP
A_3S_ICHSPKR
MIC_REF1
U27
TLV2462CDGKR_SSOP_8P
A_MIC_L
EXT_MIC_L
A_MIC_R
EXT_MIC_R
For EMI Test
C462 &C460 make sure passes 100MHZ MR limit
INVENTEC
TITLE
DDD UMA
AUDIO CODEC
SIZE A3
CODE CS
DOC. NUMBER Model_No
REV AX1
SHEET 41 OF 48
CHANGE by Smit
15-Mar-2007

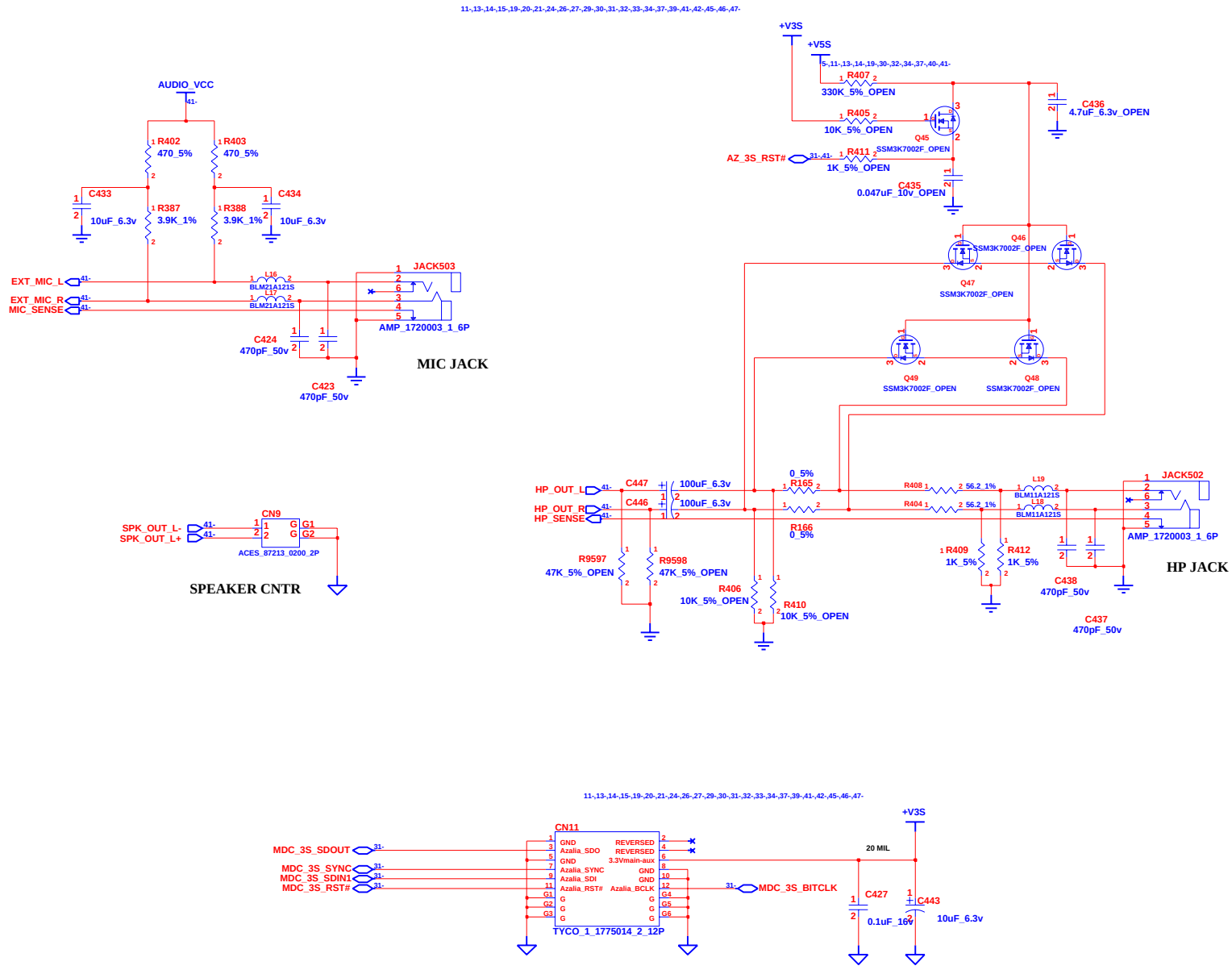


# MDC CNTR

| INVENTEC | | | |
|---|---|---|---|
| TITLE | DDD UMA<br>MDC CNTR | | |
| SIZE A3 | CODE CS | DOC. NUMBER Model_No | REV AX1 |
| CHANGE by Smit | 15-Mar-2007 | SHEET 42 OF 48 | |

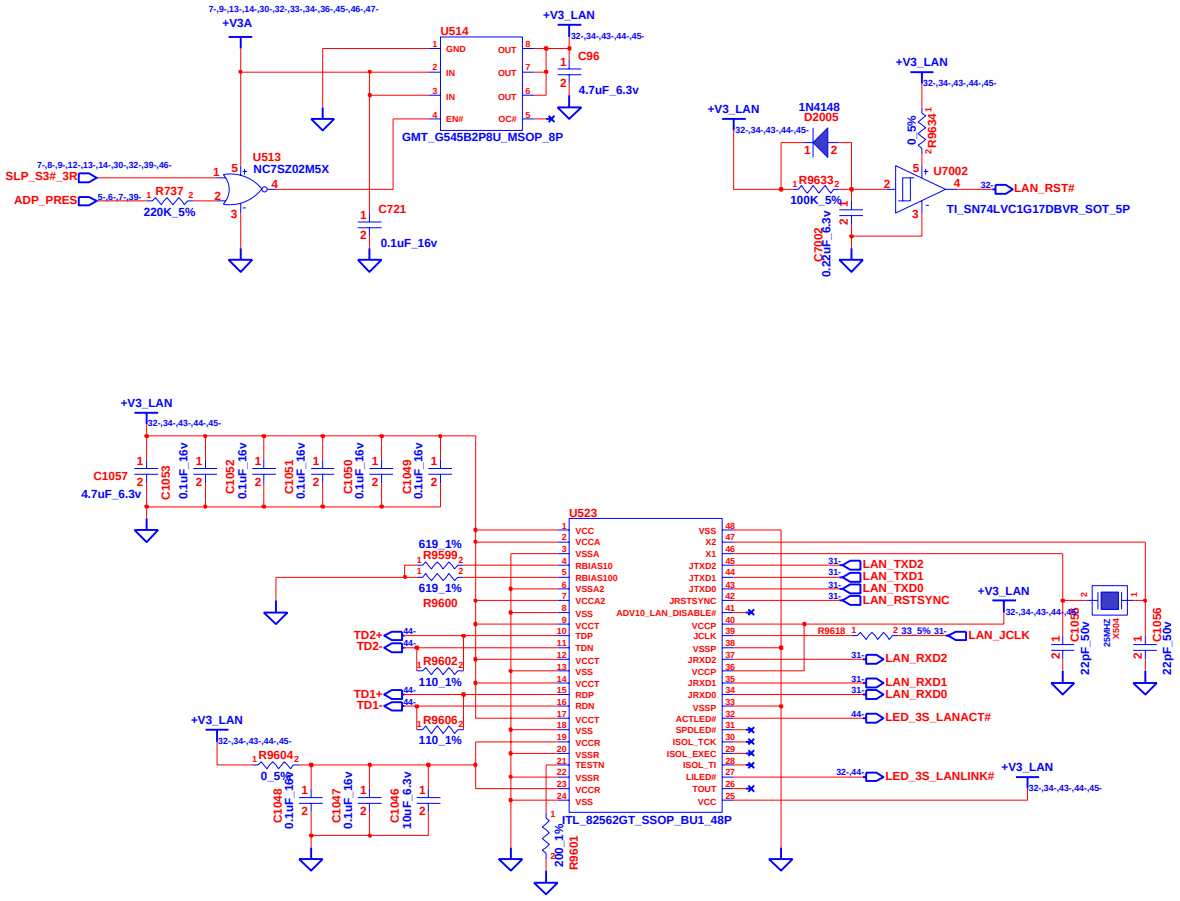


# INVENTEC

TITLE **DDD UMA**
**NIC 10/100- CONTROLLER**

| SIZE | CODE | DOC. NUMBER | REV |
|---|---|---|---|
| A3 | CS | Model_No | AX1 |

SHEET 43 OF 48

CHANGE by Smit 28-Mar-2007

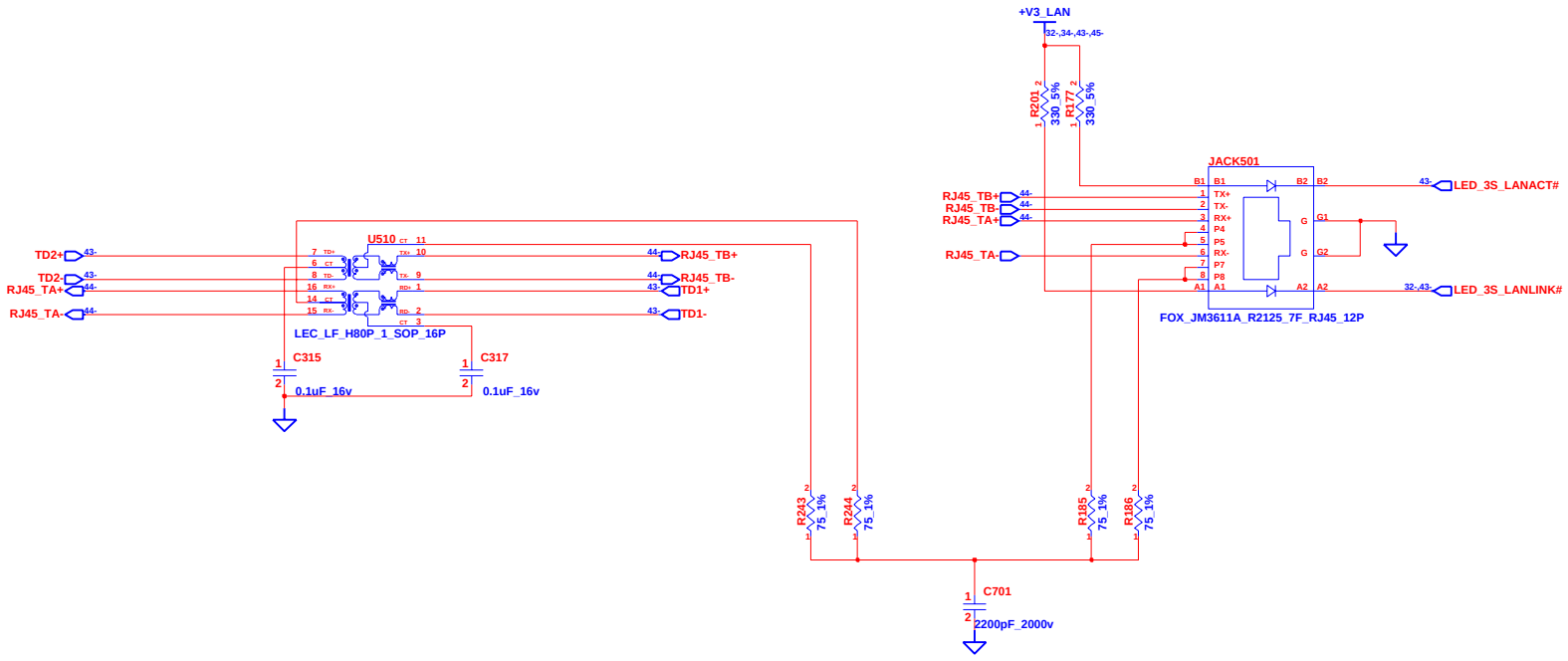


INVENTEC

TITLE DDD UMA
NIC 10/100- RJ45

| SIZE | CODE | DOC. NUMBER | REV |
|---|---|---|---|
| A3 | CS | Model_No | AX1 |

CHANGE by Smit 26-Mar-2007

SHEET 44 OF 48

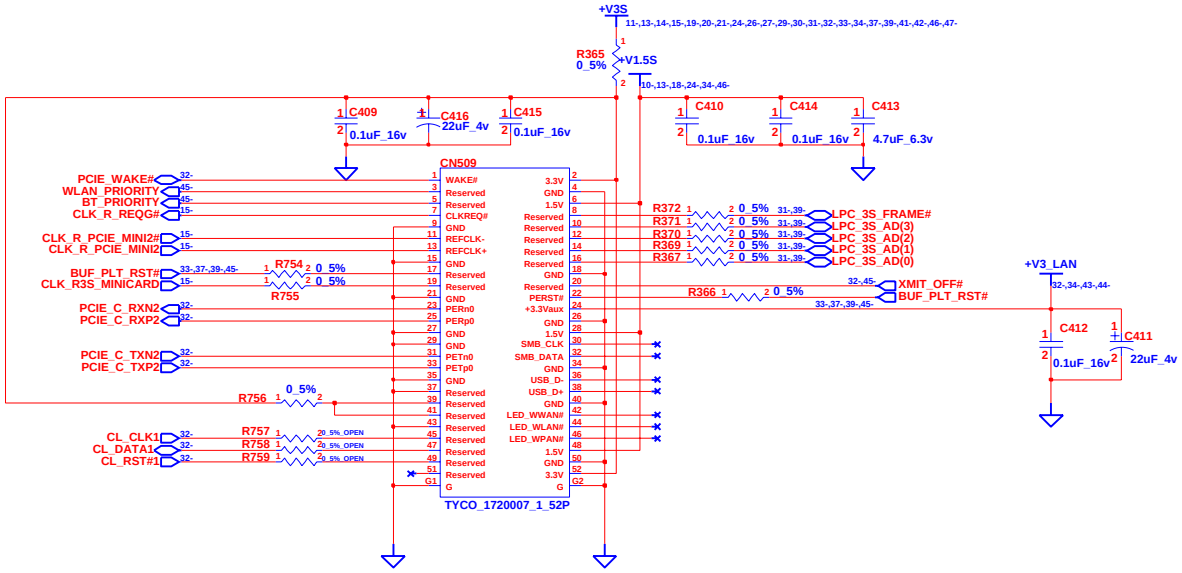


# WLAN CNTR

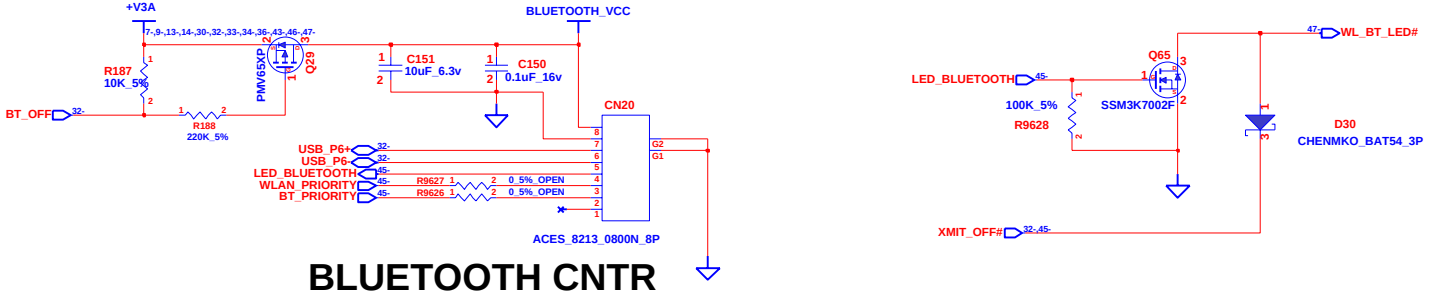


# BLUETOOTH CNTR

| | | | |
|---|---|---|---|
| INVENTEC | | | |
| TITLE DDD UMA MINICARD & BT CONN | | | |
| SIZE A3 | CODE CS | DOC. NUMBER Model_No | REV AX1 |
| CHANGE by Smit | 23-Mar-2007 | SHEET 45 OF 48 | |

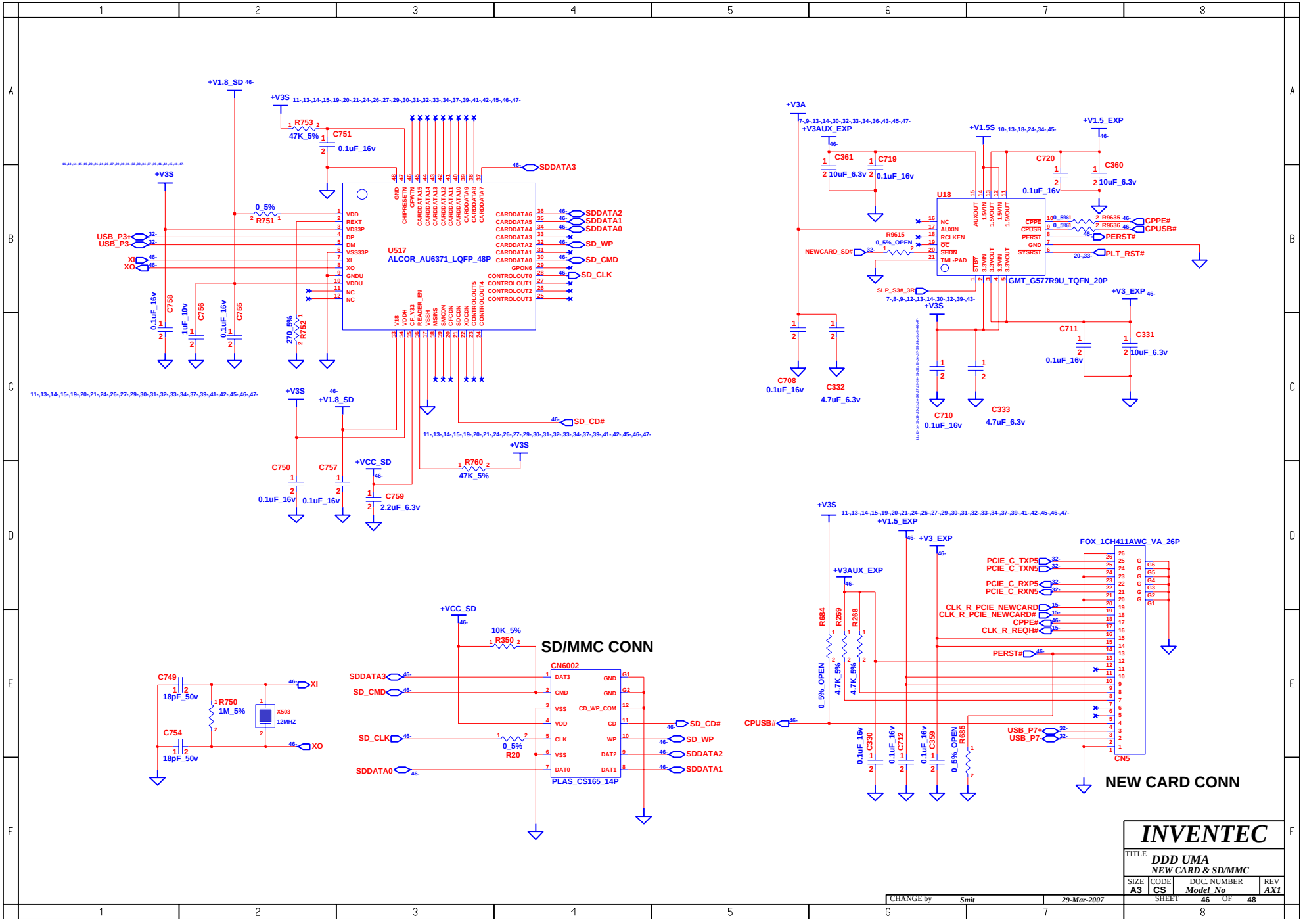
U517
ALCOR_AU6371_LQFP_48P
SD/MMC CONN
CN6002
PLAS_CS165_14P
U18
GMT_G577R9U_TQFN_20P
FOX_1CH411AWC_VA_26P
CN5
NEW CARD CONN
INVENTEC
TITLE
DDD UMA
NEW CARD & SD/MMC
SIZE A3
CODE CS
DOC. NUMBER Model_No
REV AX1
SHEET 46 OF 48
CHANGE by Smit
29-Mar-2007

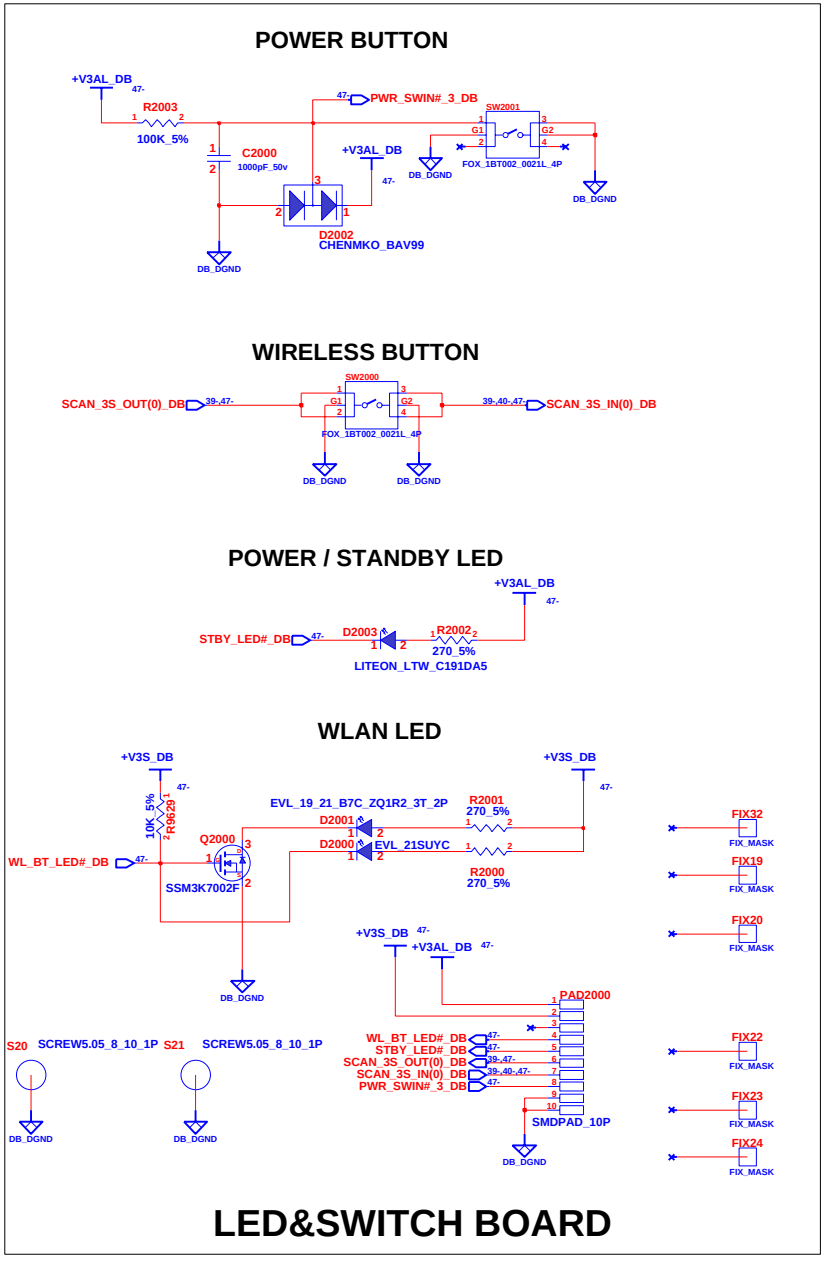


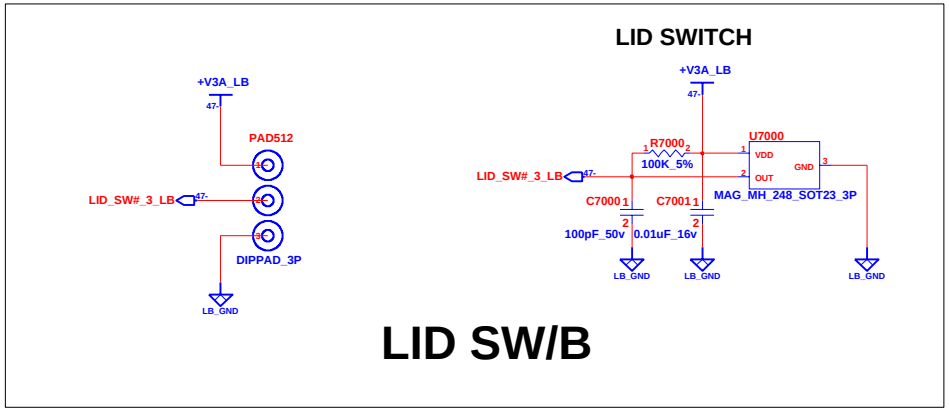


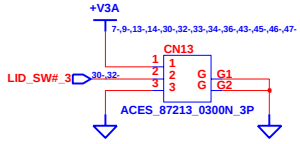


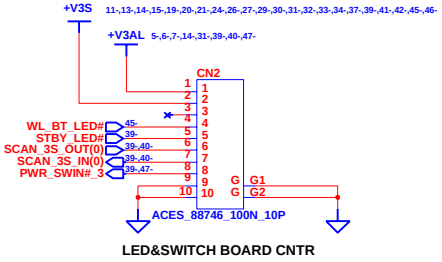


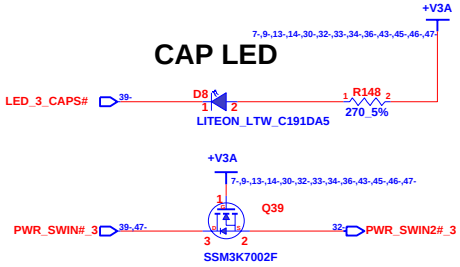


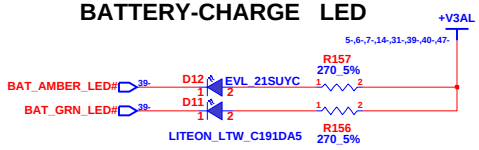


| | | | |
|---|---|---|---|
| INVENTEC | | | |
| TITLE DDD UMA BUTTON & LED | | | |
| SIZE A3 | CODE CS | DOC. NUMBER Model_No | REV AX1 |
| CHANGE by Smit | 23-Mar-2007 | SHEET 47 OF 48 | |
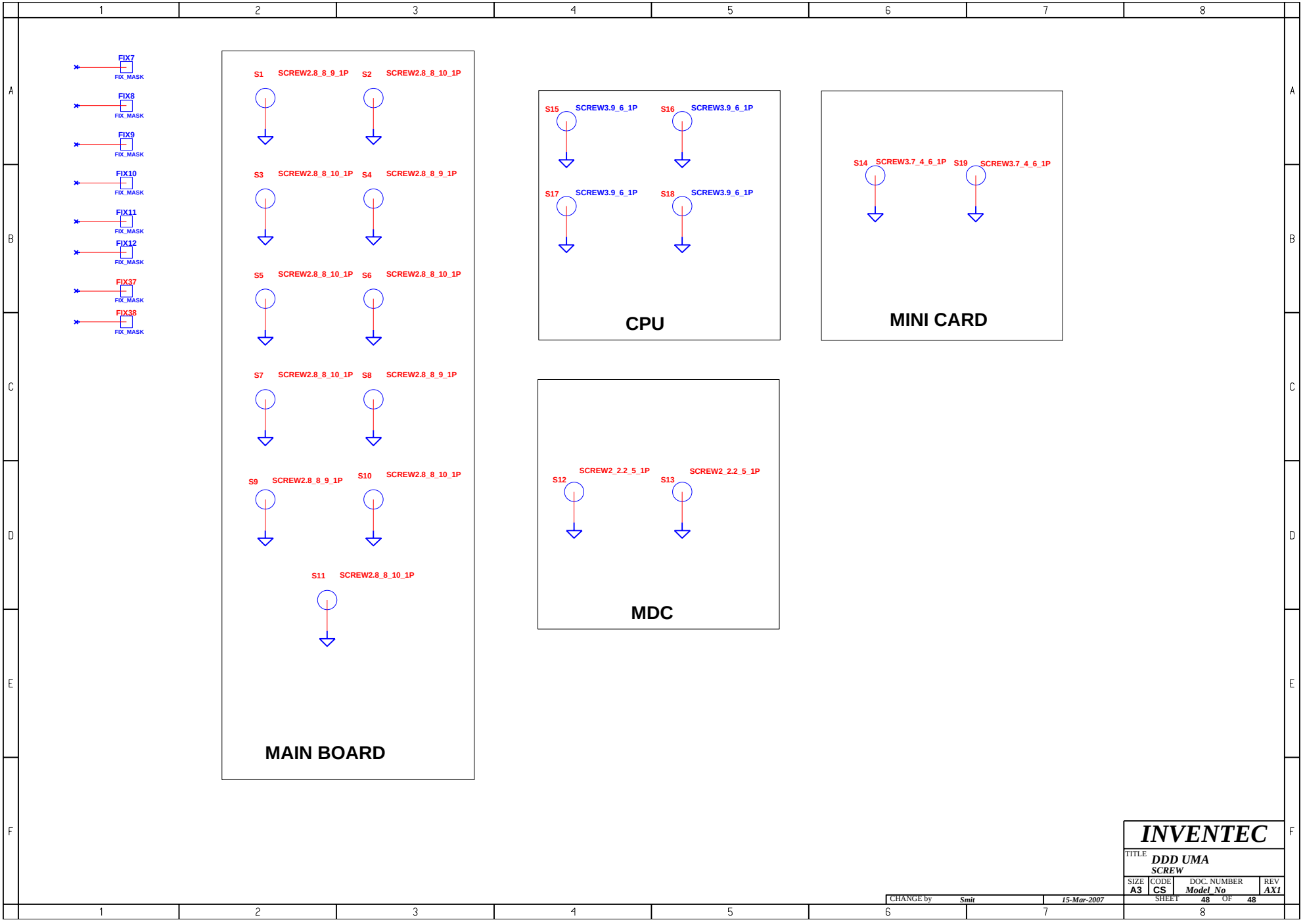
91修中华维修网 www.91xiu.com 91修--HTTP://WWW.91XIU.COM