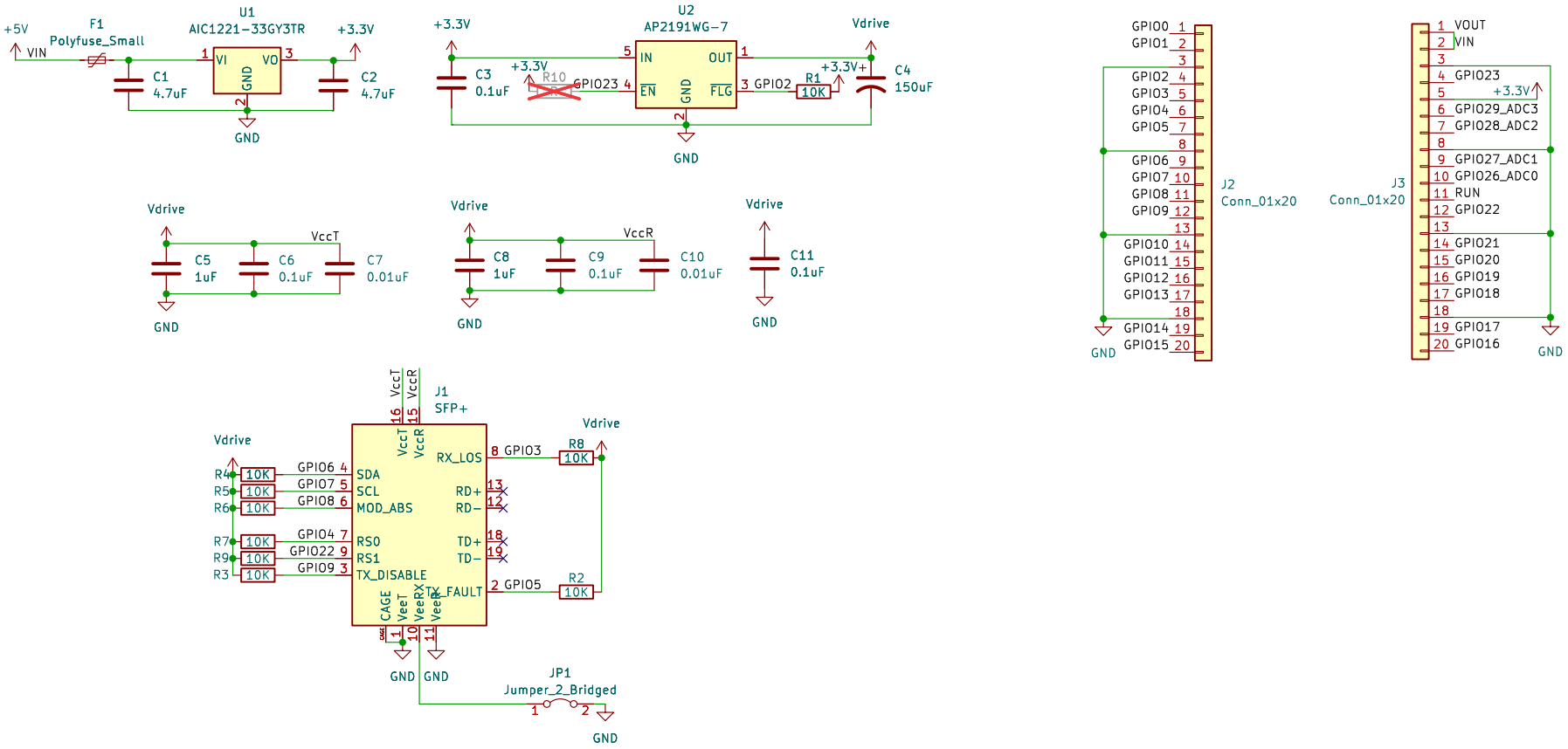

pon.wiki

Sheet: /

File: sfp-snoop.kicad_sch

Title: SFP Programmer

Size: A4	Date:	Rev:
KiCad E.D.A. kicad 7.0.7		Id: 1/1