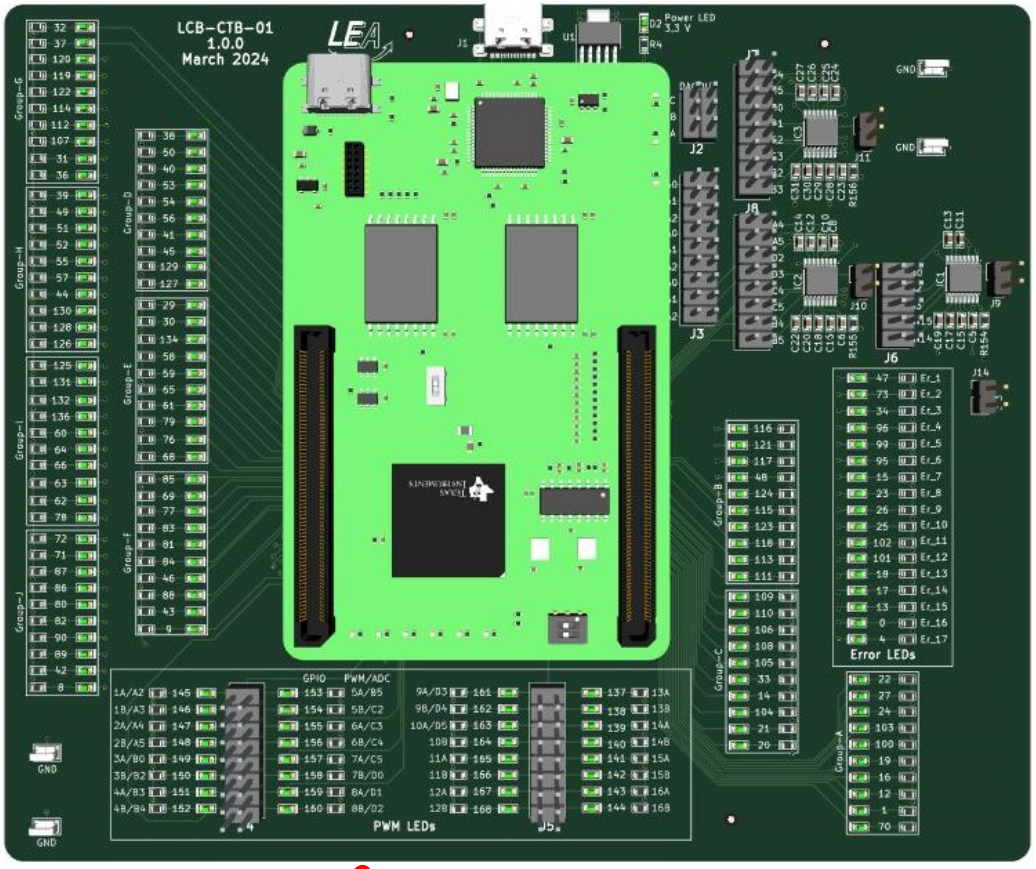

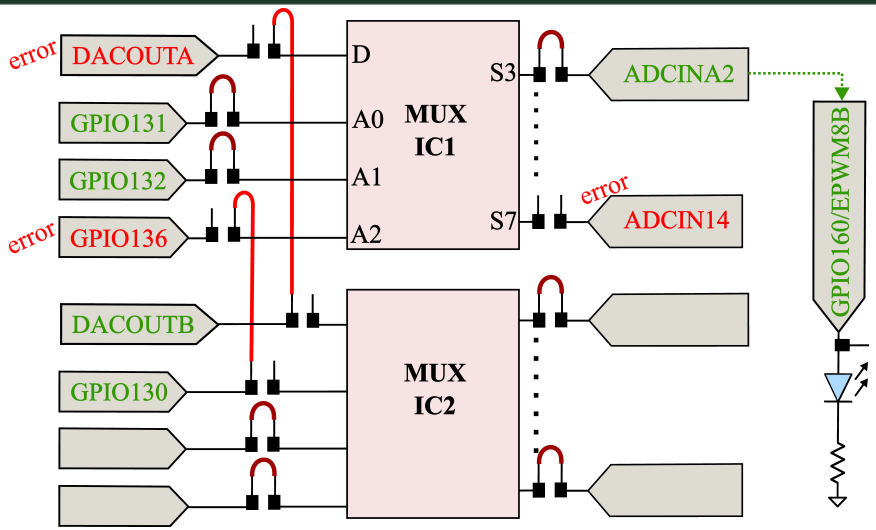

LEA Logo		Rubber Feet Set	ACCESSORY1	Jumper	ACCESSORY21
Fiducial medium		Rubber Feet Set	ACCESSORY2	Jumper	ACCESSORY22
Fiducial medium		Jumper	ACCESSORY3	Jumper	ACCESSORY23
Fiducial medium		Jumper	ACCESSORY4	Jumper	ACCESSORY24
Fiducial medium		Jumper	ACCESSORY5	Jumper	ACCESSORY25
		Jumper	ACCESSORY6	Jumper	ACCESSORY26
		Jumper	ACCESSORY7	Jumper	ACCESSORY27
		Jumper	ACCESSORY8	Jumper	ACCESSORY28
		Jumper	ACCESSORY9	Jumper	ACCESSORY29
		Jumper	ACCESSORY10	Jumper	ACCESSORY30
		Jumper	ACCESSORY11	Jumper	ACCESSORY31
		Jumper	ACCESSORY12	Jumper	ACCESSORY32
		Jumper	ACCESSORY13	Jumper	ACCESSORY33
		Jumper	ACCESSORY14	Jumper	ACCESSORY34
		Jumper	ACCESSORY15	Jumper	ACCESSORY35
		Jumper	ACCESSORY16	Jumper	ACCESSORY36
		Jumper	ACCESSORY17	Jumper	ACCESSORY37
		Jumper	ACCESSORY18	Jumper	ACCESSORY38
		Jumper	ACCESSORY19	Jumper	ACCESSORY39
		Jumper	ACCESSORY20	Jumper	ACCESSORY40

Power – Page 2

Datei: PowerSupply.kicad_sch

LCB – Page 3

Datei: LCB.kicad_sch

GPIO LEDs – Page 4

Datei: LED.kicad_sch

ADC MUX – Page 5

Datei: ADCINs.kicad_sch

PADERBORN UNIVERSITY DEPARTMENT OF POWER ELECTRONICS AND ELECTRICAL DRIVES

Sheet: /
File: LCB-CTB-01.kicad_sch

Title: LCB-CTB-01: Test Board

Size: A4	Date: 2024-03-02	**Rev: 1.0.0**
KiCad E.D.A. kicad 7.0.10		Id: 1/5

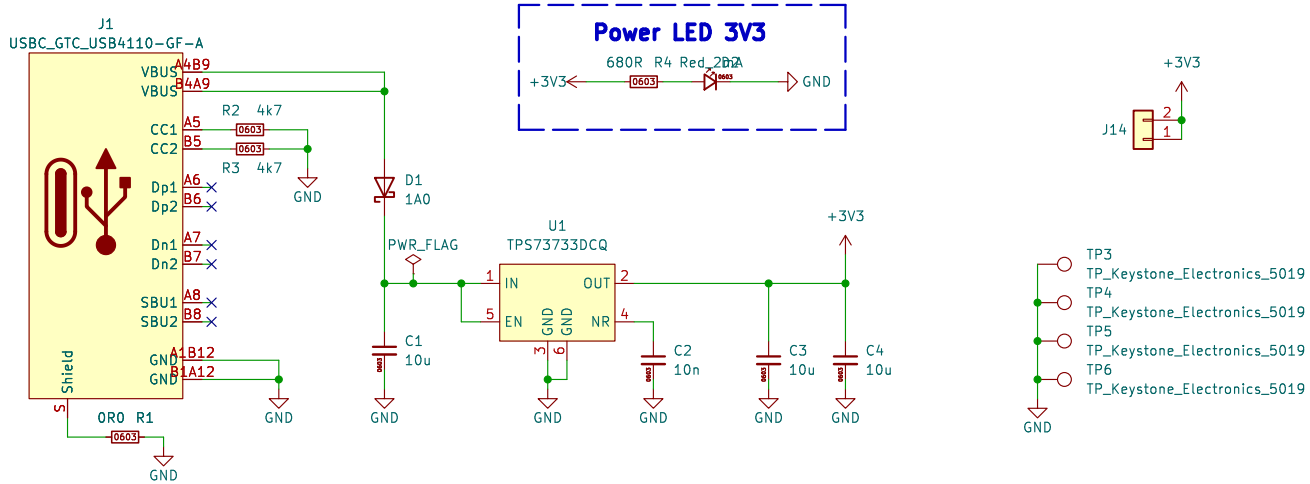

PADERBORN UNIVERSITY DEPARTMENT OF POWER ELECTRONICS AND ELECTRICAL DRIVES

Sheet: /Power – Page 2/
File: PowerSupply.kicad_sch

Title: LCB–CTB–01: Test Board

Size: A4	Date: 2024–03–02	**Rev: 1.0.0**
KiCad E.D.A. kicad 7.0.10		Id: 2/5

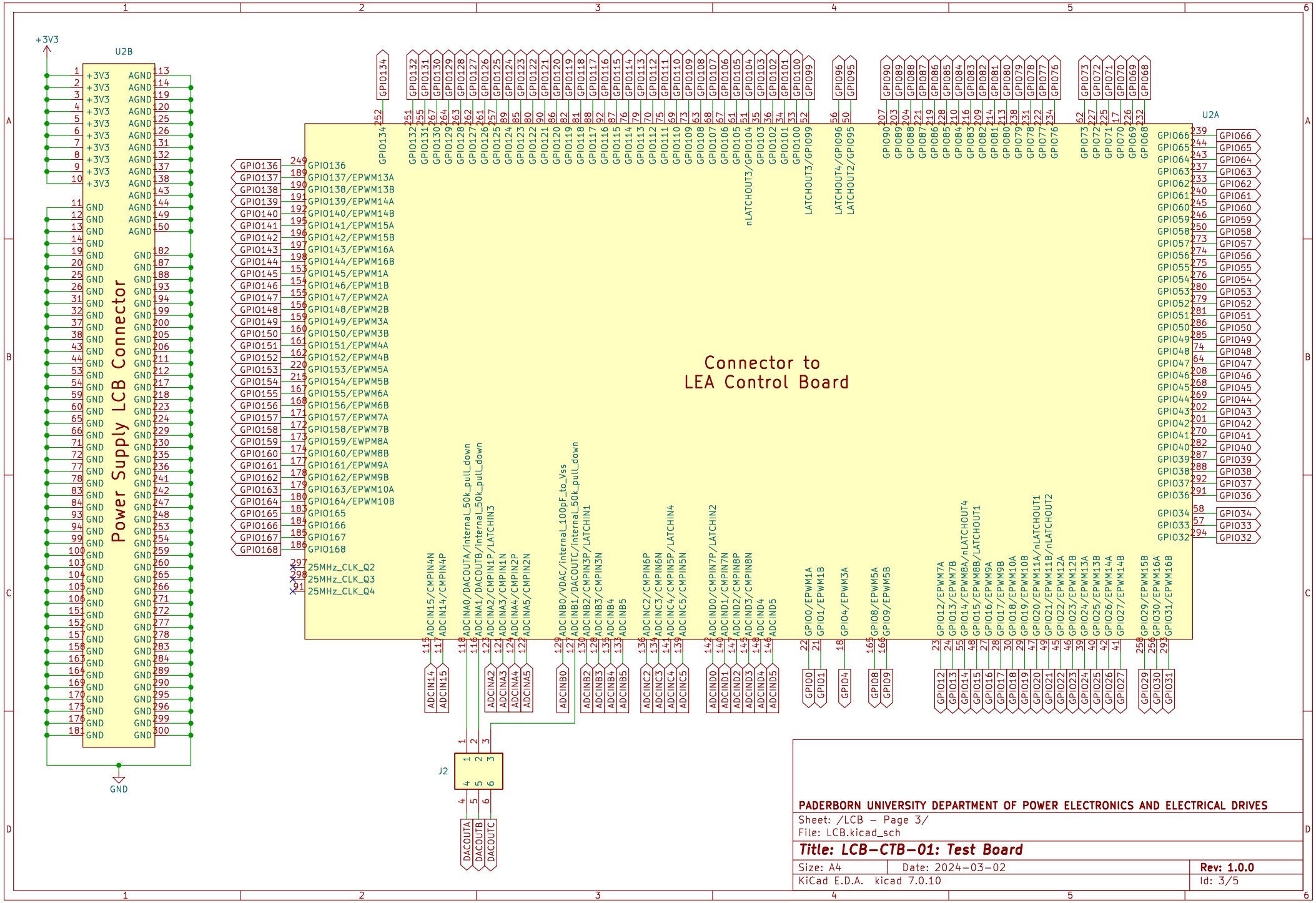

PADERBORN UNIVERSITY DEPARTMENT OF POWER ELECTRONICS AND ELECTRICAL DRIVES

Sheet: /LCB - Page 3/

File: LCB.kicad_sch

Title: LCB-CTB-01: Test Board

Size: A4	Date: 2024-03-02	Rev: 1.0.0
KiCad E.D.A. kicad 7.0.10		Id: 3/5

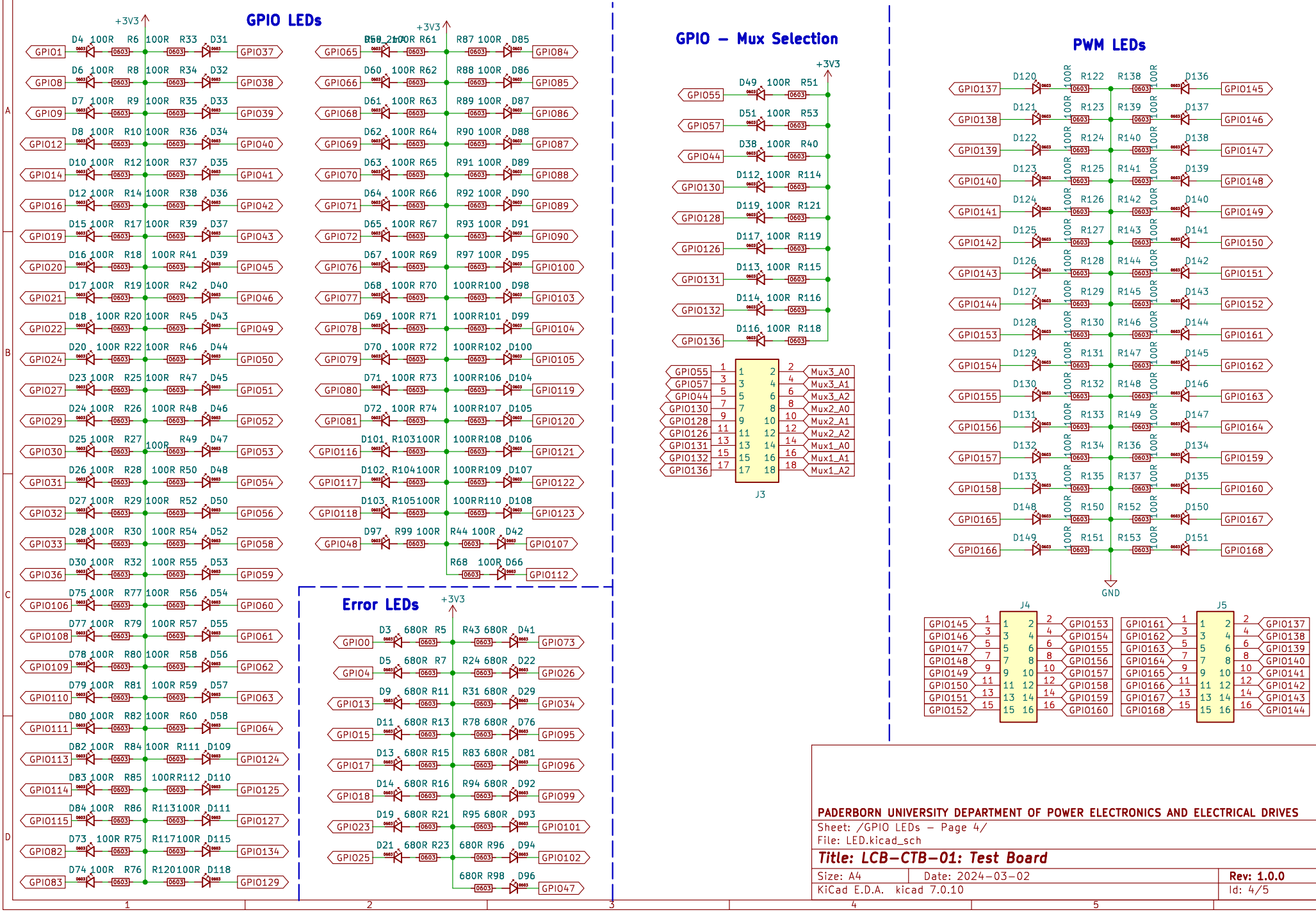

PADERBORN UNIVERSITY DEPARTMENT OF POWER ELECTRONICS AND ELECTRICAL DRIVES

Sheet: /GPIO LEDs – Page 4/
File: LED.kicad_sch

Title: LCB–CTB–01: Test Board

Size: A4	Date: 2024–03–02	**Rev: 1.0.0**
KiCad E.D.A. kicad 7.0.10		Id: 4/5

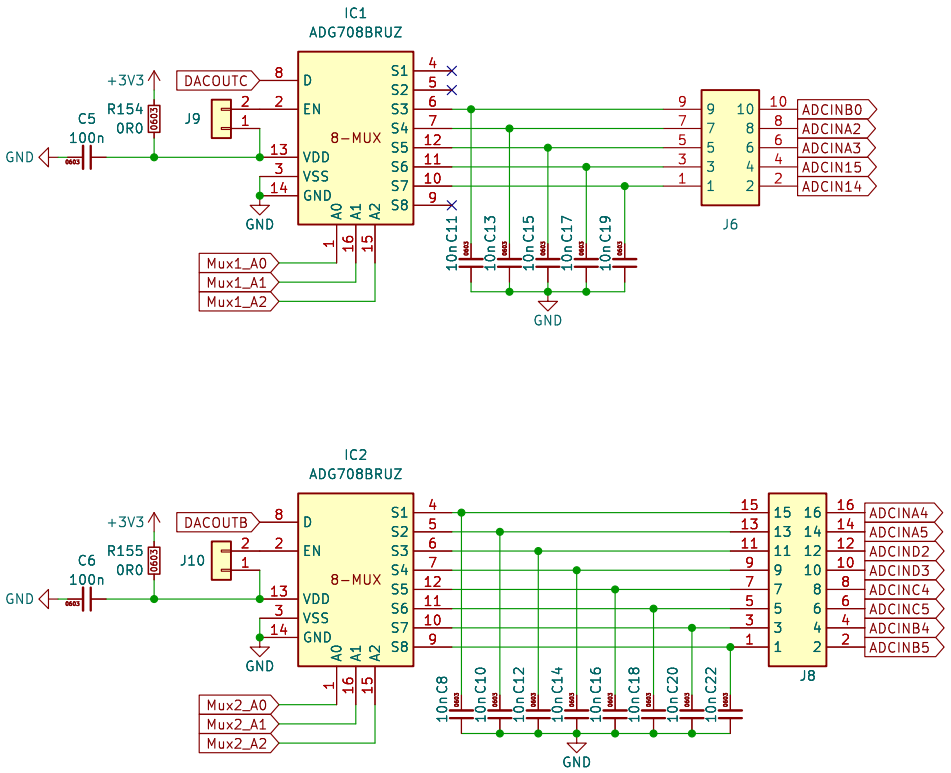

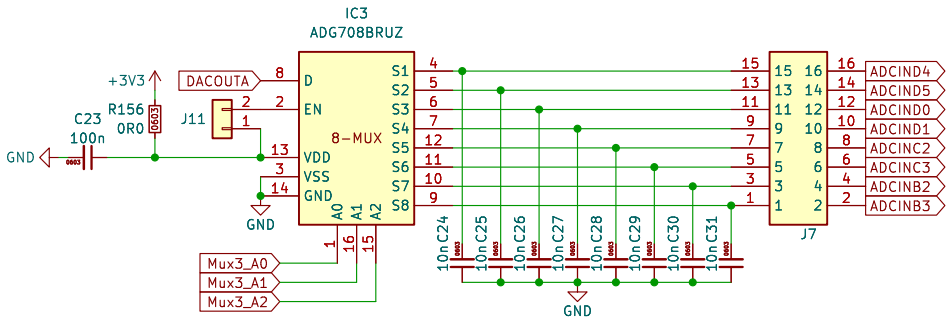

PADERBORN UNIVERSITY DEPARTMENT OF POWER ELECTRONICS AND ELECTRICAL DRIVES

Sheet: /ADC MUX – Page 5/
File: ADCINs.kicad_sch

Title: LCB–CTB–01: Test Board

Size: A4	Date: 2024–03–02	**Rev: 1.0.0**
KiCad E.D.A. kicad 7.0.10		Id: 5/5