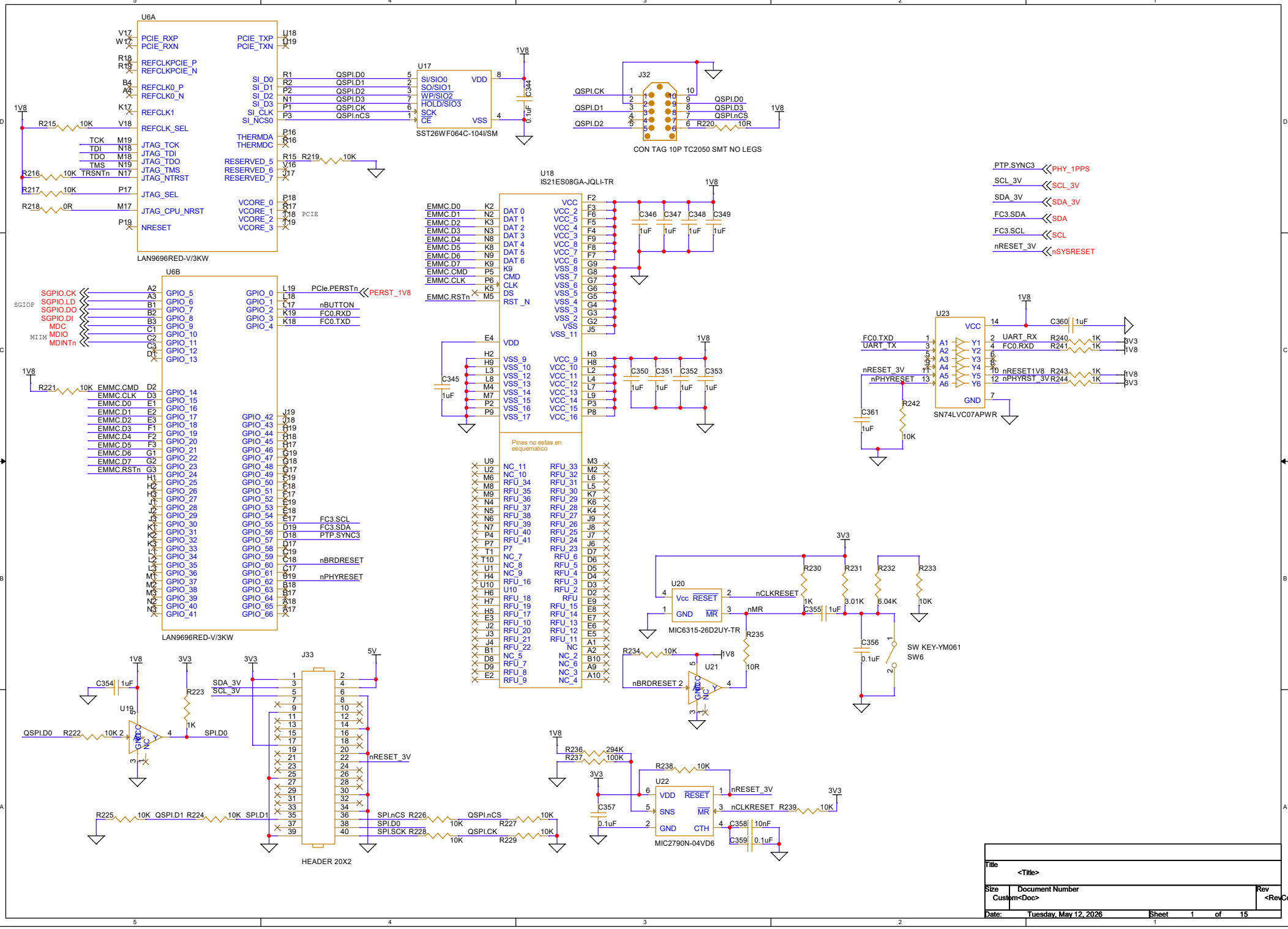
U6A
LAN9696RED-V/3KW
U6B
LAN9696RED-V/3KW
U17
SST26WF064C-104I/SM
J32
CON TAG 10P TC2050 SMT NO LEGS
U18
IS21ES08GA-JQLI-TR
Pines no estas en esquematico
U23
SN74LVC07APWR
U20
MIC6315-26D2UY-TR
U21
U19
J33
HEADER 20X2
U22
MIC2790N-04VD6
SW KEY-YM061
SW6
PTP.SYNC3
PHY_1PPS
SCL_3V
SCL_3V
SDA_3V
SDA_3V
FC3.SDA
SDA
FC3.SCL
SCL
nRESET_3V
nSYSRESET
Title
<Title>
Size
Custom
Document Number
<Doc>
Rev
<RevCo
Date:
Tuesday, May 12, 2026
Sheet
1
of
15

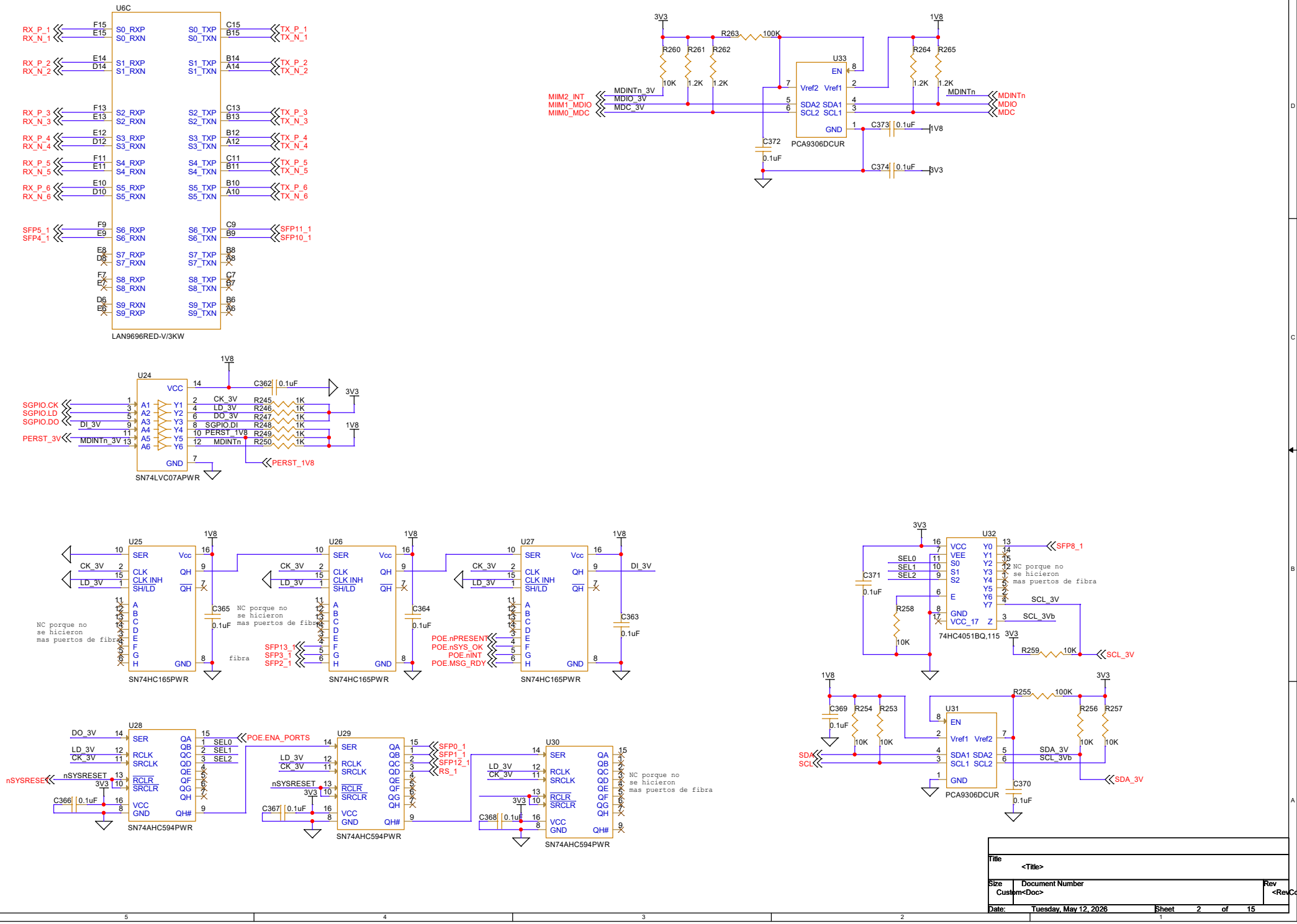

Title	<Title>	
Size Custom	Document Number <Doc>	Rev <RevCo
Date: Tuesday, May 12, 2026	Sheet 2 of 15	

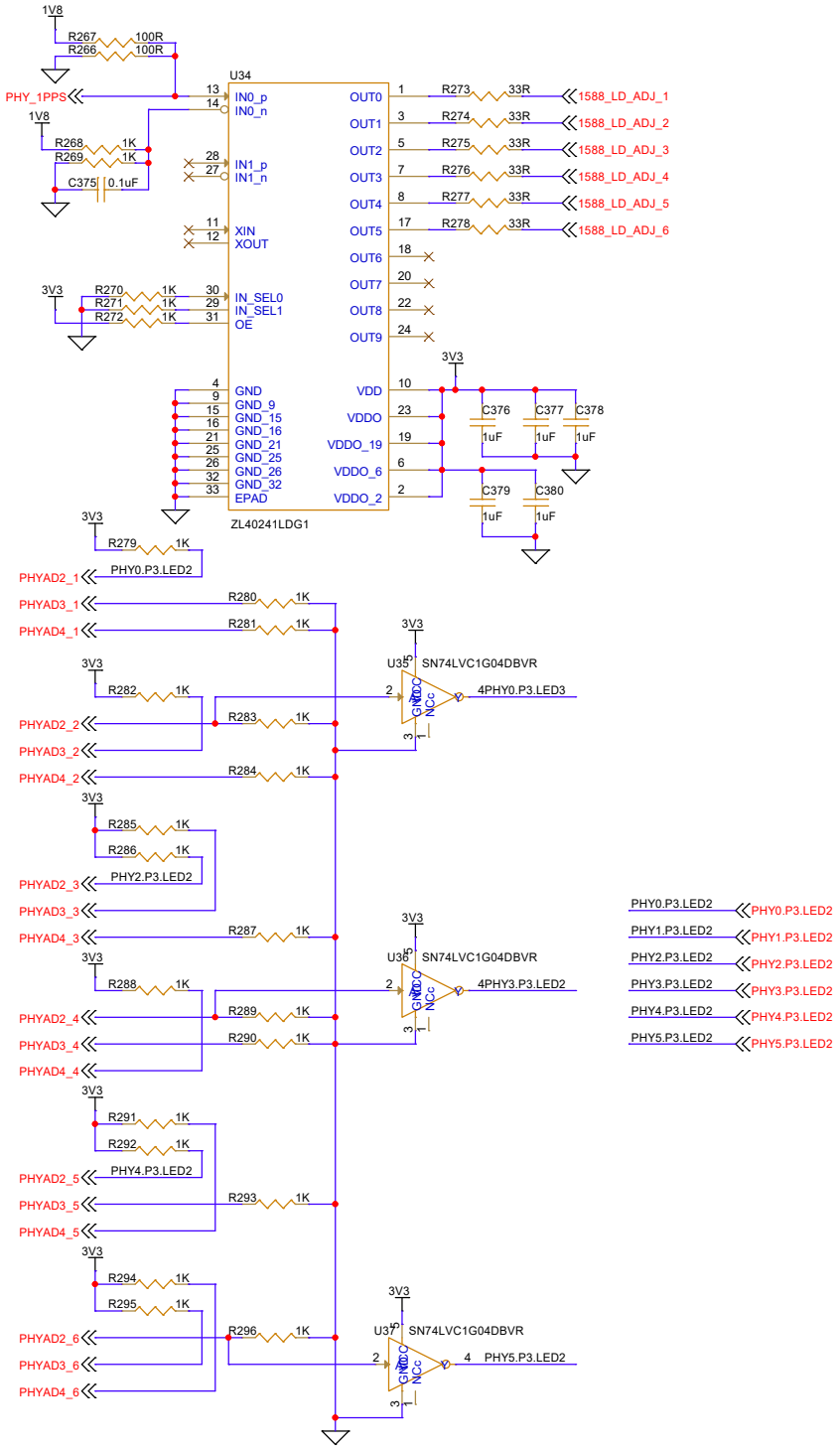

Title <Title>		
Size Custom	Document Number <Doc>	Rev <RevCo
Date: Tuesday, May 12, 2026	Sheet 3 of 15	

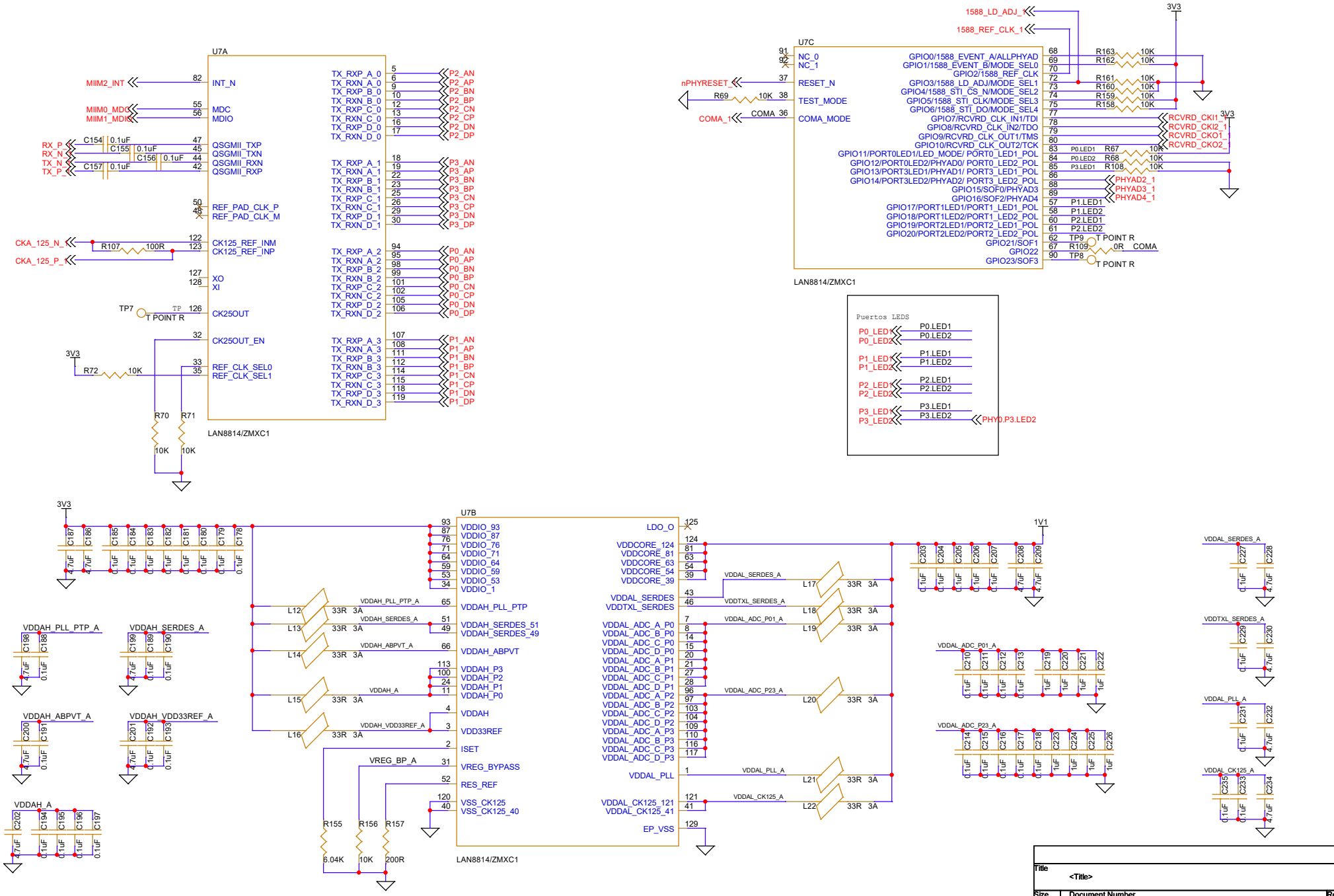

Title	<Title>		
Size	Document Number		Rev
Custom	<Doc>		<RevCo
Date:	Tuesday, May 12, 2026	Sheet 4 of 15	

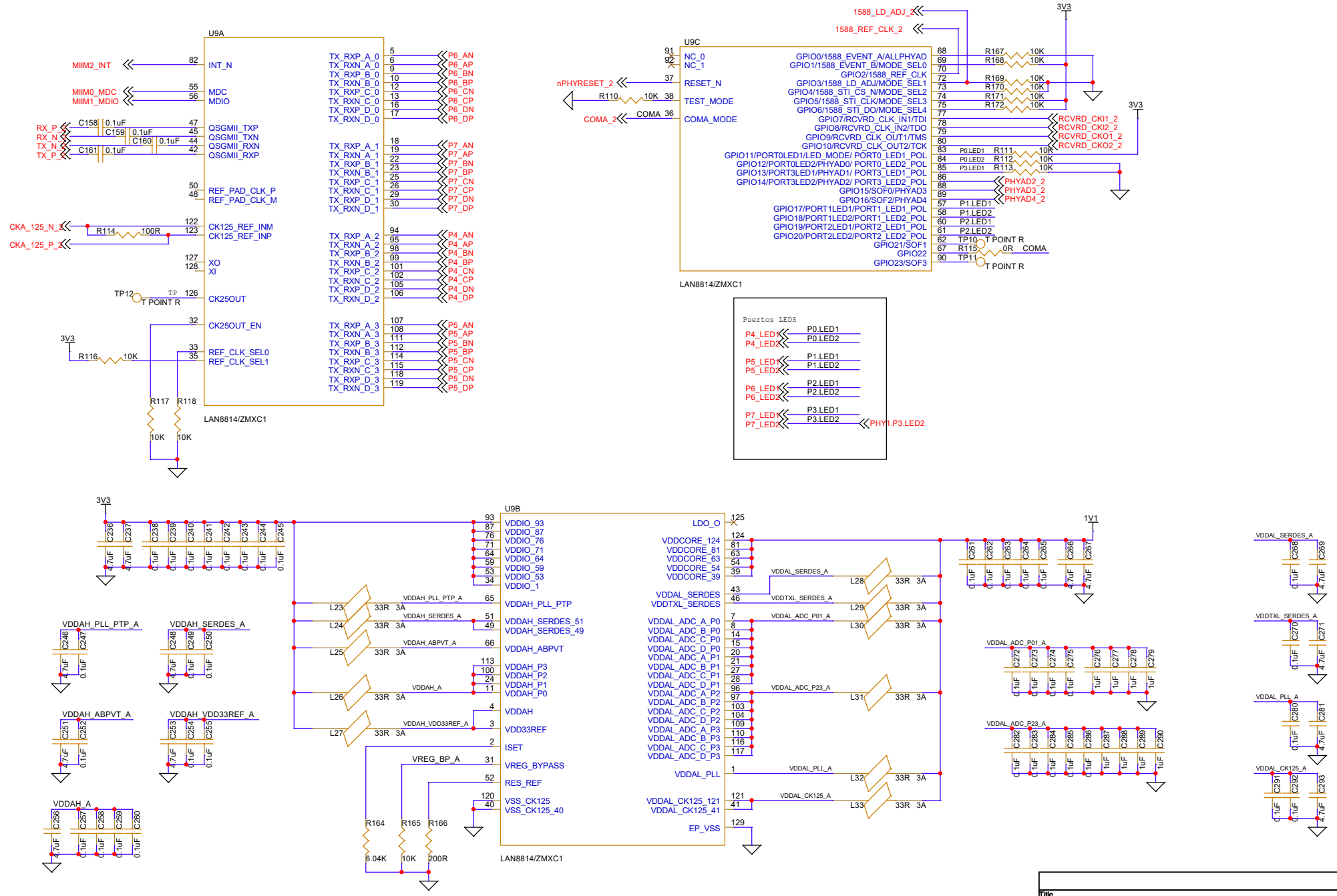
U9A
LAN8814/ZMXC1
U9C
LAN8814/ZMXC1
Puertos LEDS
U9B
LAN8814/ZMXC1
3V3
1V1
Title
<Title>
Size
Custom
Document Number
<Doc>
Rev
<RevCode>
Date:
Tuesday, May 12, 2026
Sheet
5
of
15

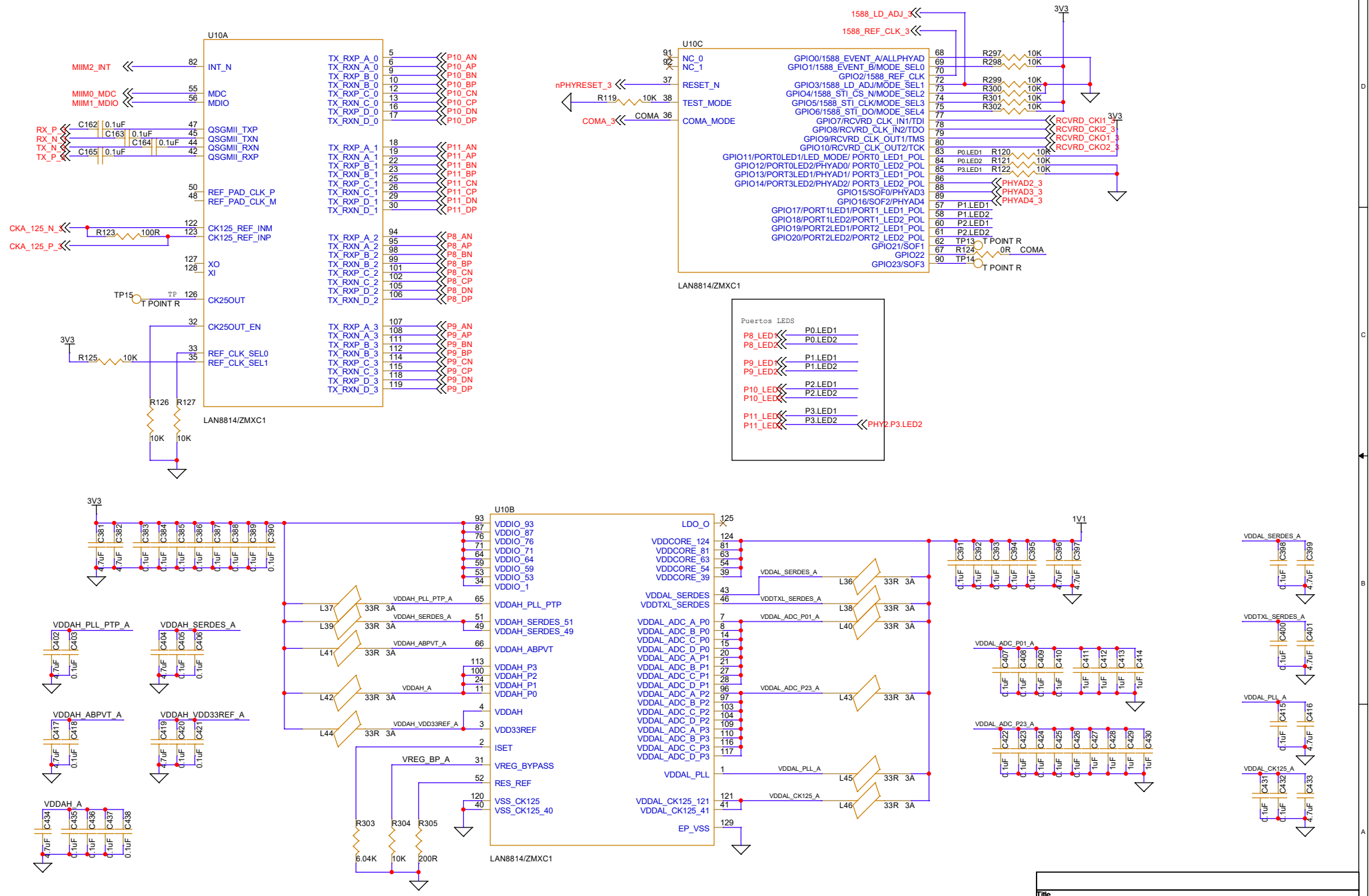
U10A
LAN8814/ZMXC1
U10C
LAN8814/ZMXC1
Puertos LEDS
U10B
LAN8814/ZMXC1
Title
<Title>
Size
Custom
Document Number
<Doc>
Rev
<RevCode>
Date: Tuesday, May 12, 2026
Sheet 6 of 15

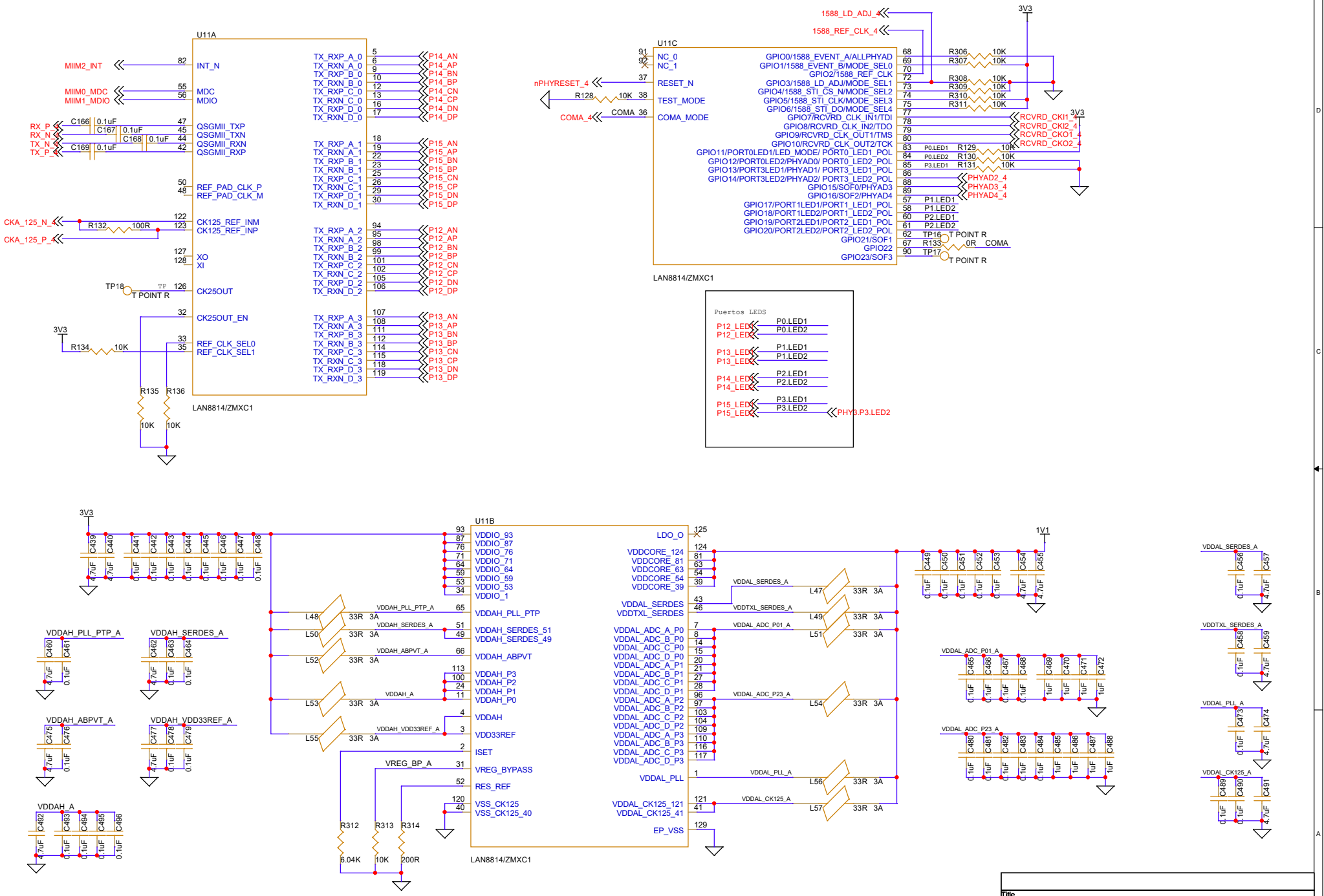
U11A
LAN8814/ZMXC1
U11C
LAN8814/ZMXC1
Puertos LEDS
U11B
LAN8814/ZMXC1
3V3
1V1
Title
<Title>
Size
Custom
Document Number
<Doc>
Rev
<RevCode>
Date: Tuesday, May 12, 2026
Sheet 7 of 15

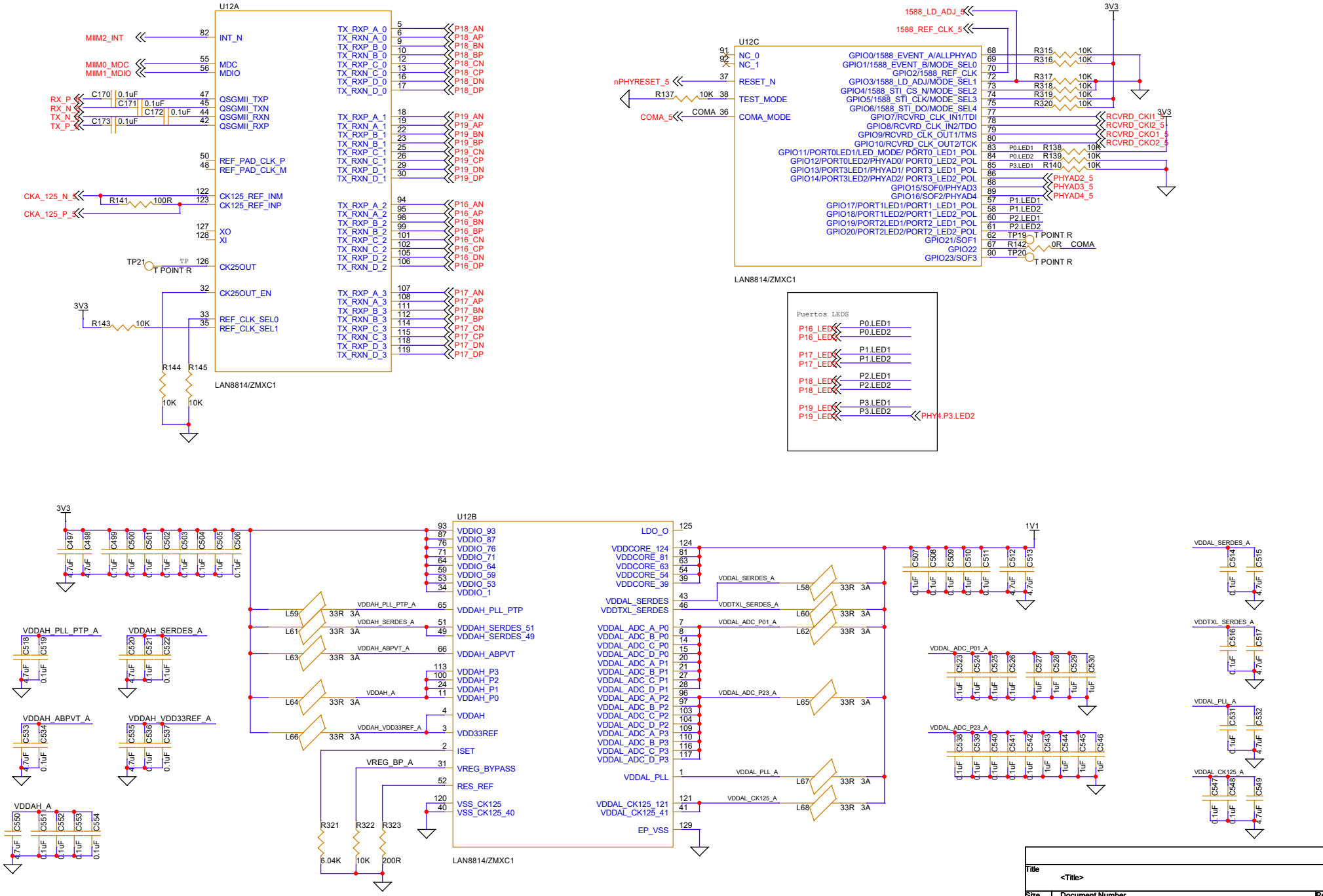
U12A
LAN8814/ZMXC1
U12C
LAN8814/ZMXC1
Puertos LEDS
U12B
LAN8814/ZMXC1
Title
<Title>
Size
Custom
Document Number
<Doc>
Rev
<RevCode>
Date: Tuesday, May 12, 2026
Sheet 8 of 15

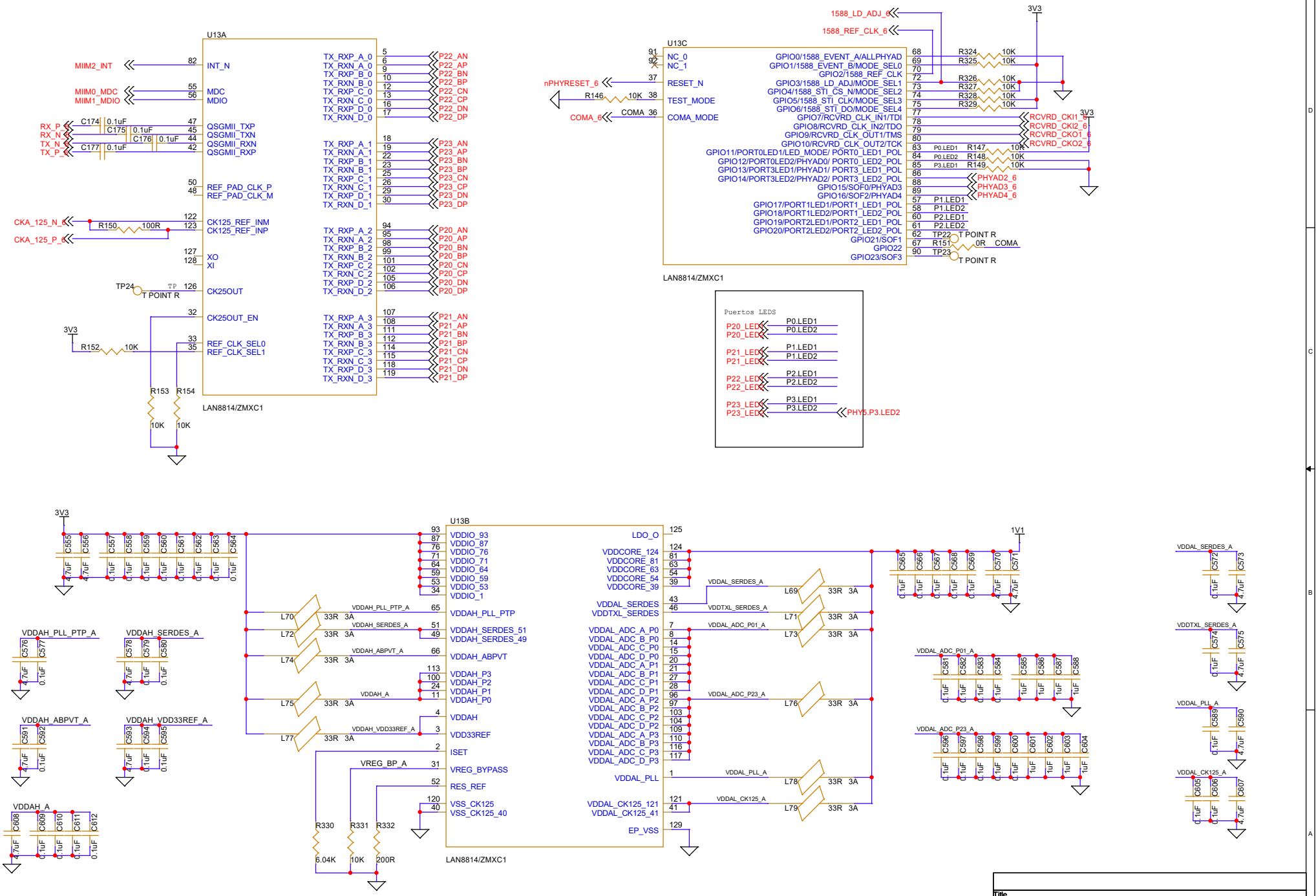
U13A
LAN8814/ZMXC1
U13C
LAN8814/ZMXC1
Puertos LEDS
U13B
LAN8814/ZMXC1
Title
<Title>
Size
Custom
Document Number
<Doc>
Rev
<RevCode>
Date: Tuesday, May 12, 2026
Sheet 9 of 15

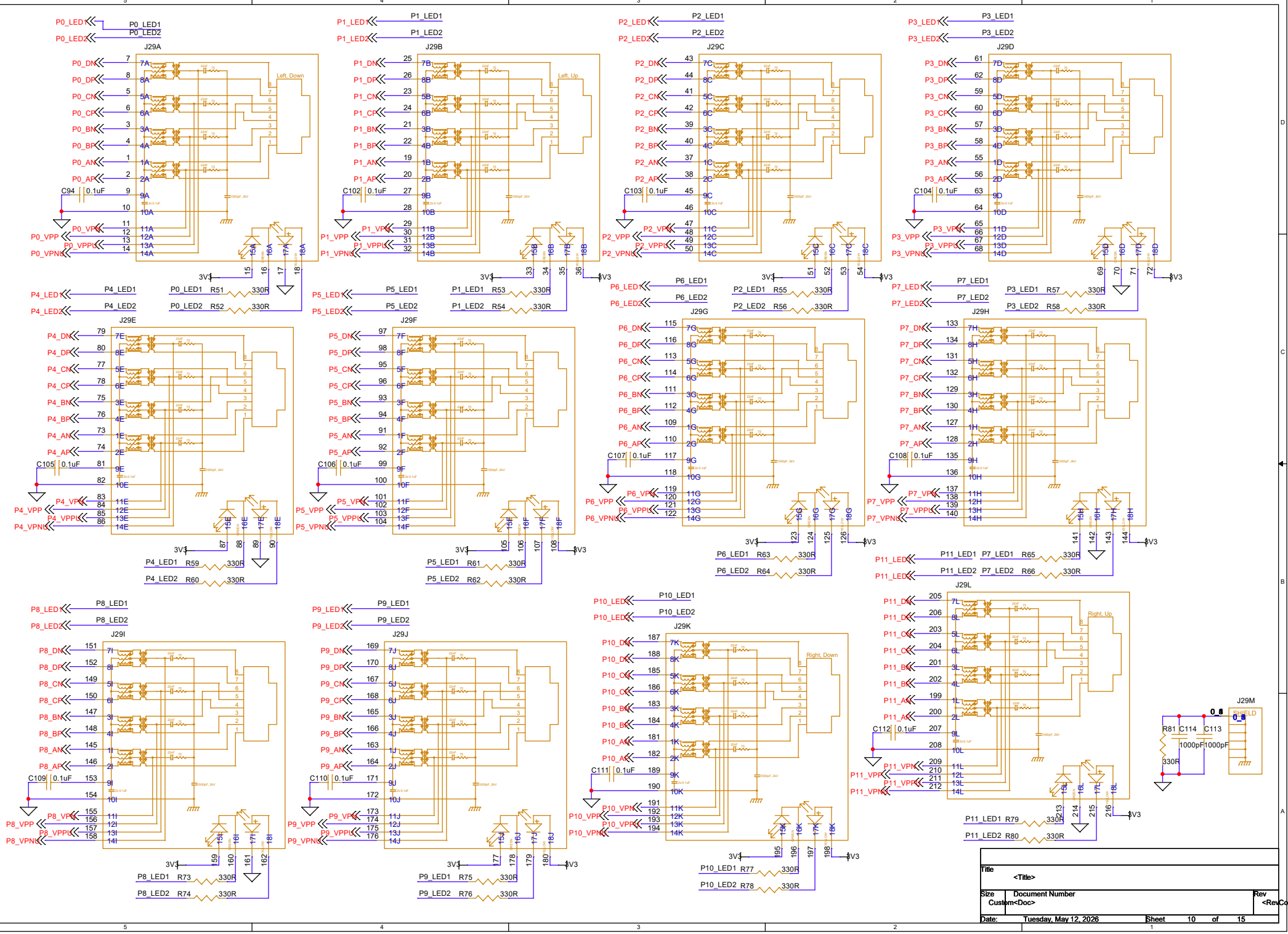

Title
<Title>

Size Custom | Document Number <Doc> | Rev <RevCo

Date: Tuesday, May 12, 2026 | Sheet 10 of 15

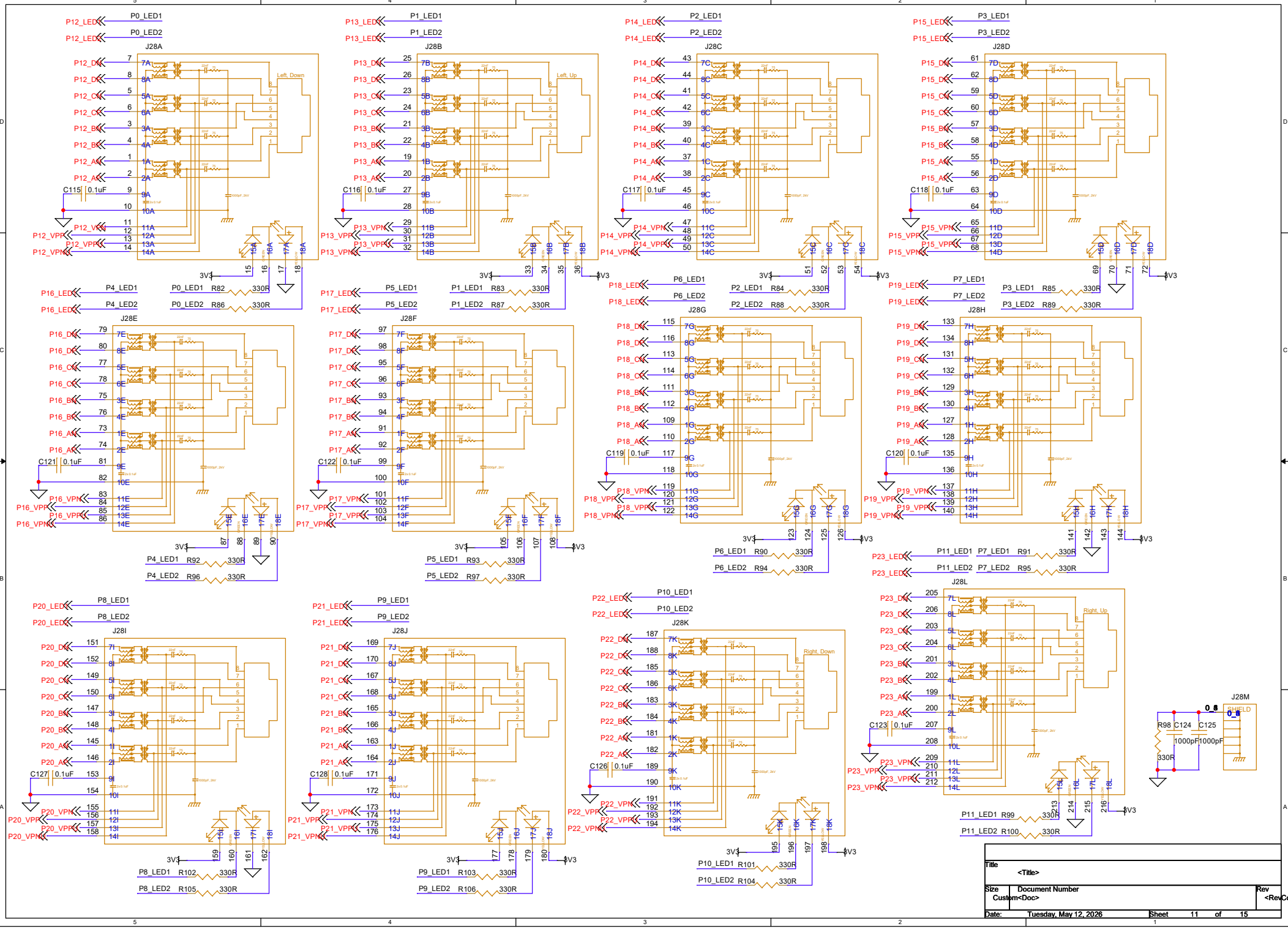

Title
<Title>

Size Custom | Document Number <Doc> | Rev <RevCo

Date: Tuesday, May 12, 2026 | Sheet 11 of 15

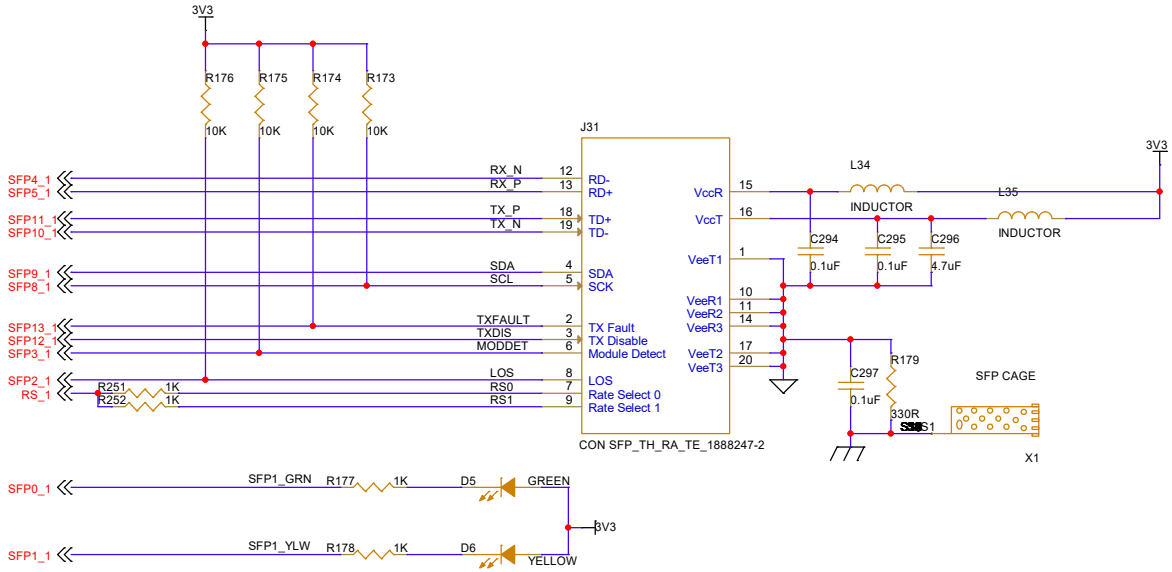

Title	<Title>	
Size	Document Number	Rev
Custom	<Doc>	<RevCo
Date:	Tuesday, May 12, 2026	Sheet 12 of 15

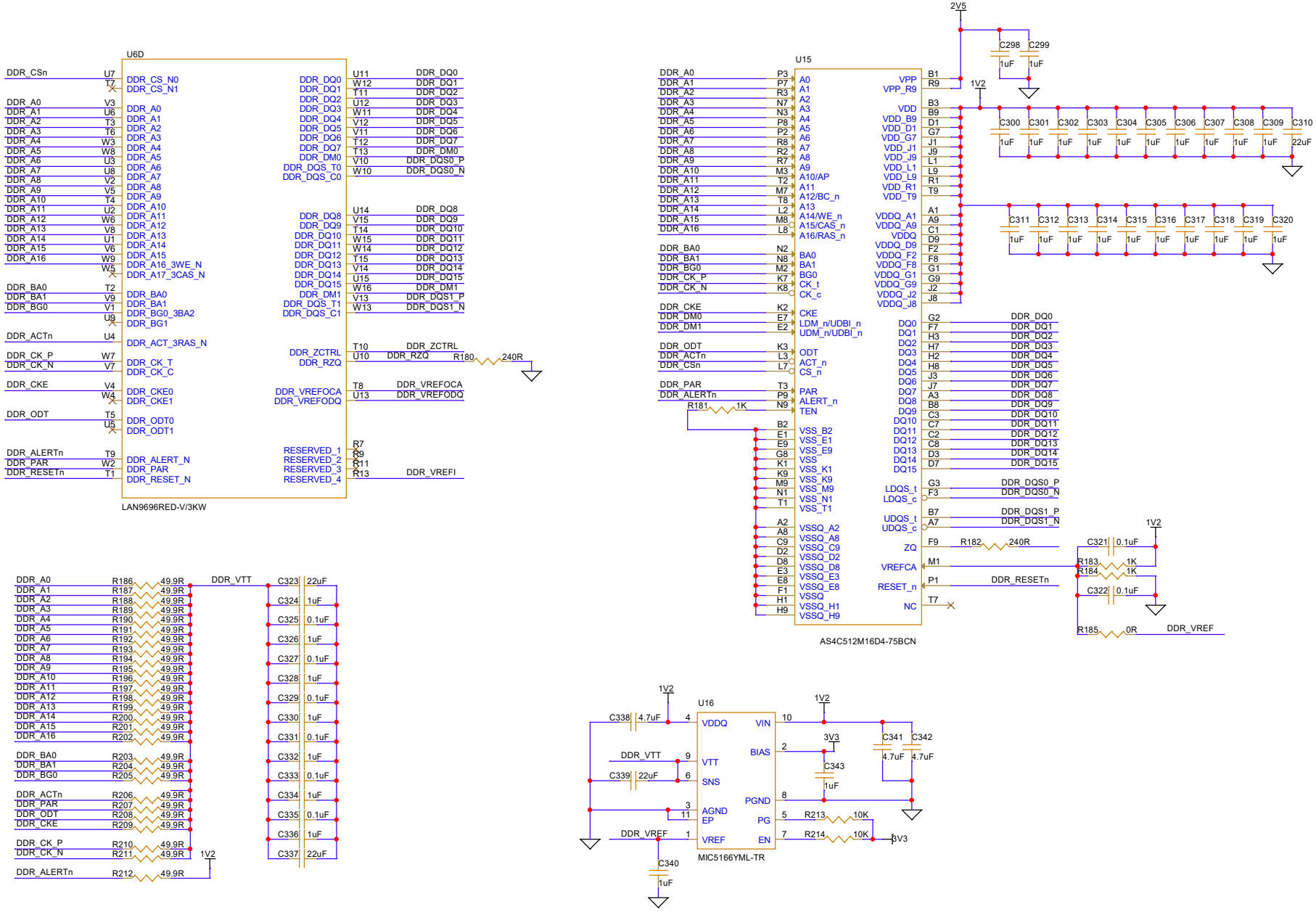

Title
<Title>

Size	Document Number	Rev
Custom	<Doc>	<RevCo

Date: Tuesday, May 12, 2026 Sheet 13 of 15

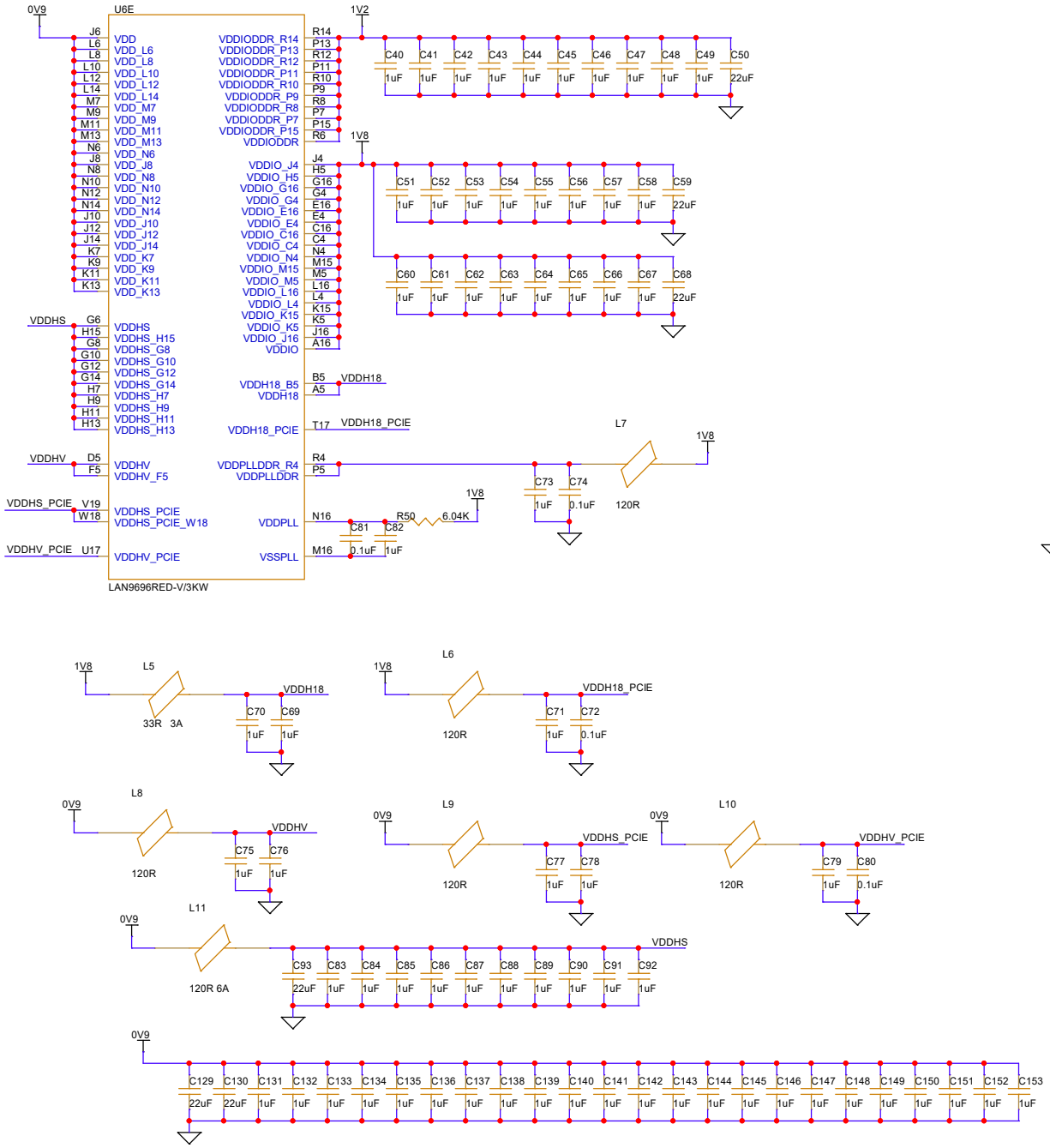

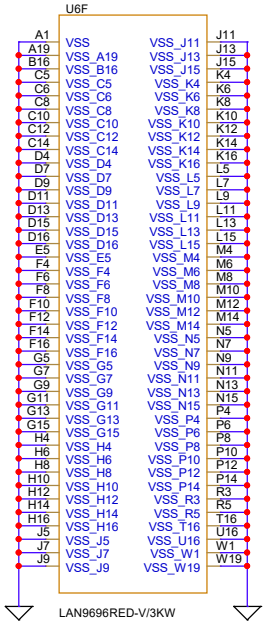

Title	<Title>		
Size	Document Number		Rev
Custom	<Doc>		<RevCo
Date:	Tuesday, May 12, 2026	Sheet 14 of 15	

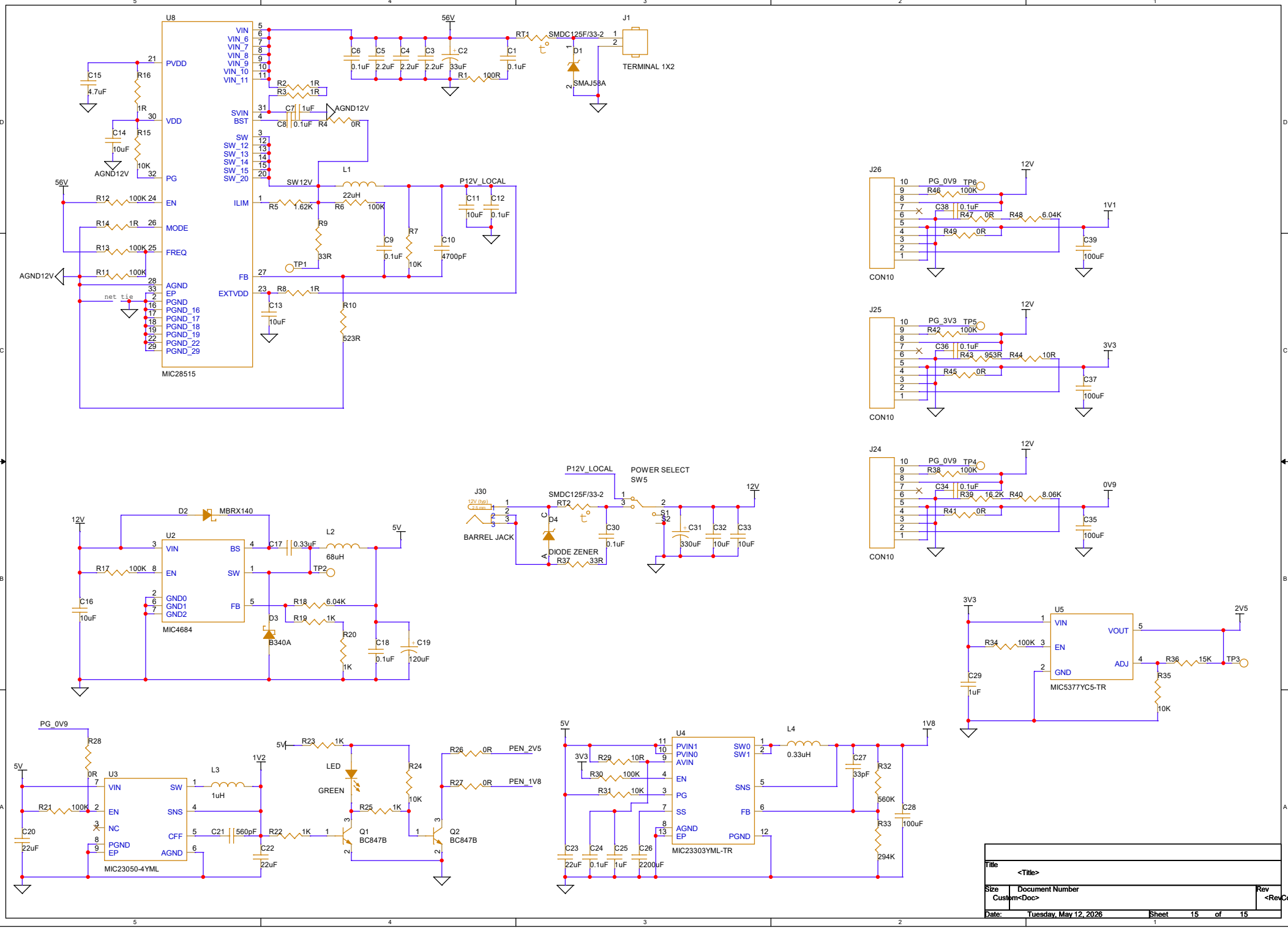

Title	<Title>
Size	Custom
Document Number	<Doc>
Rev	<RevCo
Date:	Tuesday, May 12, 2026
Sheet	15 of 15