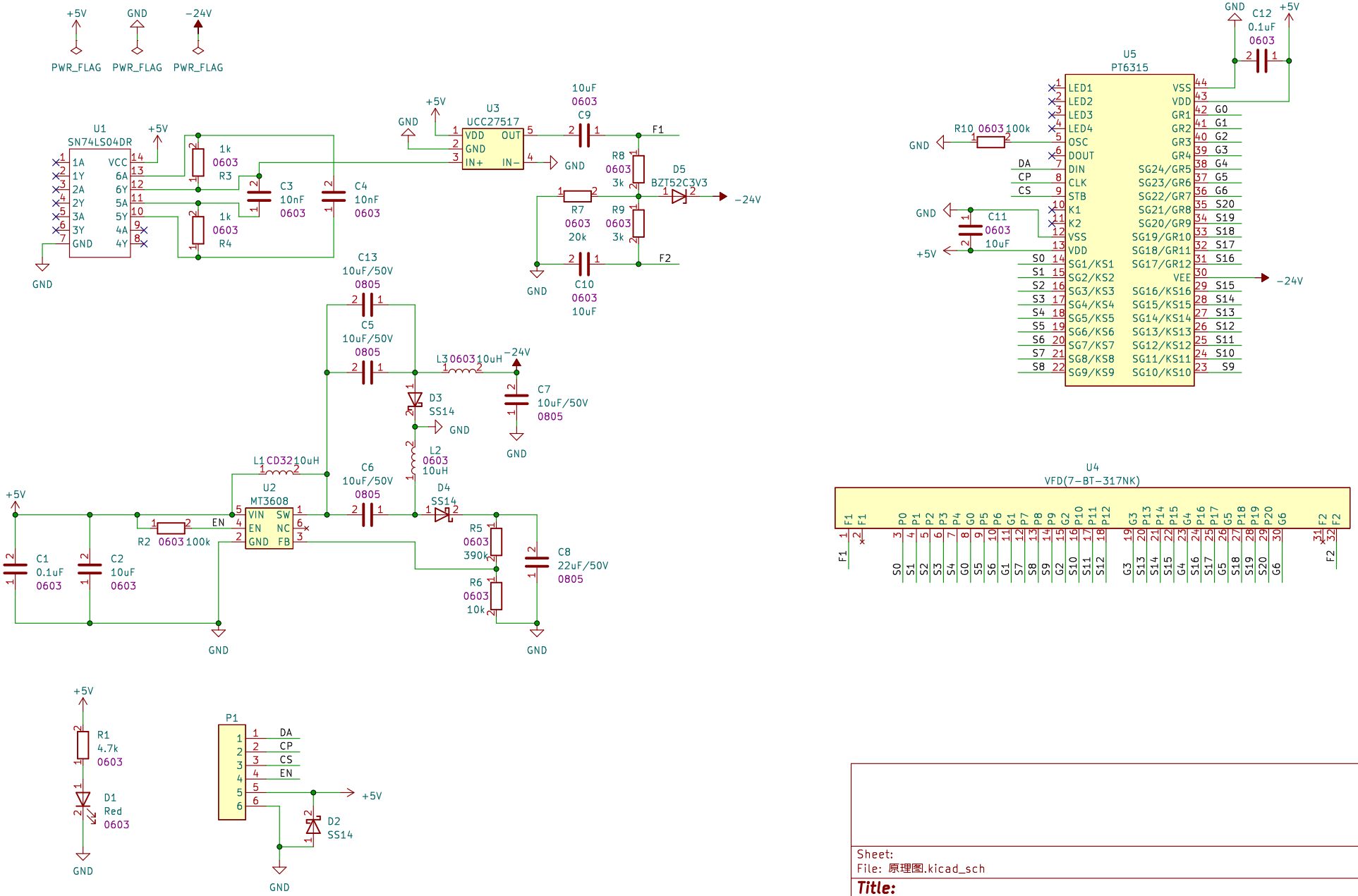

Sheet:
File: 原理图.kicad_sch

Title:

Size: A4	Date:	Rev:
KiCad E.D.A. eeschema 7.0.1		Id: 1/1