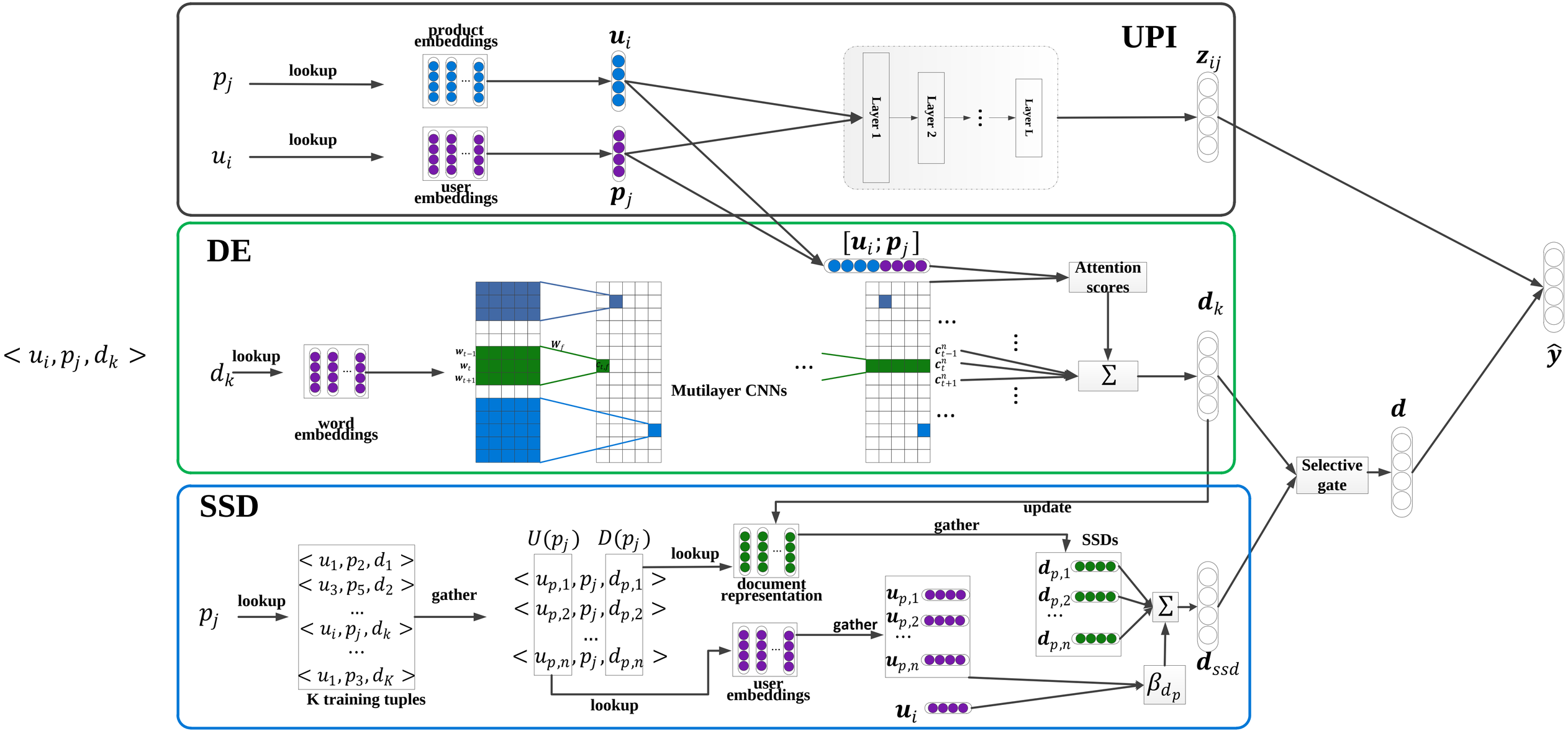
UPI
product embeddings
lookup
user embeddings
Layer 1
Layer 2
Layer L
DE
word embeddings
Mutilayer CNNs
Attention scores
SSD
K training tuples
gather
lookup
update
document representation
user embeddings
SSDs
Selective gate