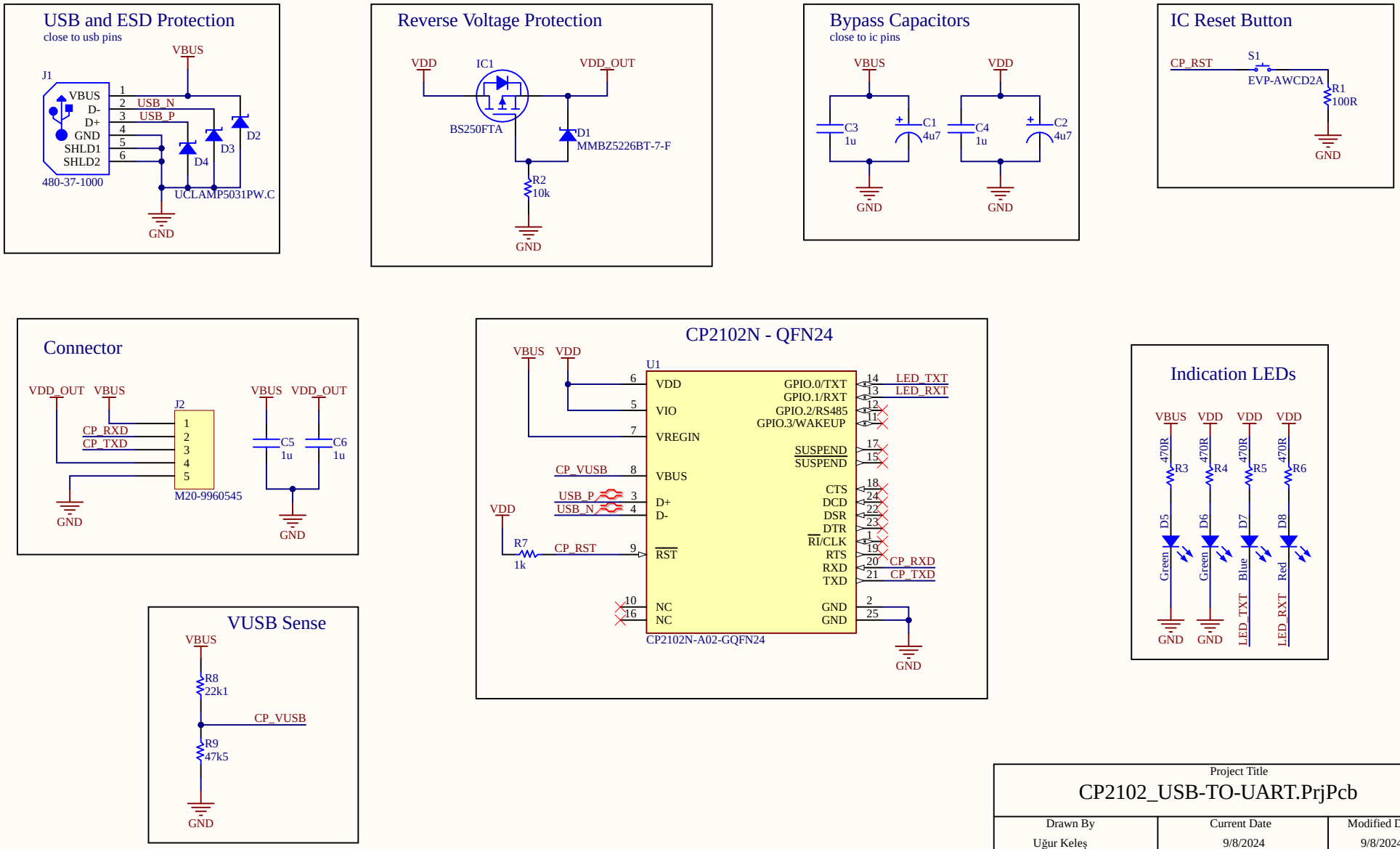

Project Title		
CP2102_USB-TO-UART.PrjPcb		
Drawn By	Current Date	Modified Date
Uğur Keleş	9/8/2024	9/8/2024
Sheet Name	Sheet Number / Sheet Total	Sheet Size
CP2102N_SCH.SchDoc	1 / 1	A4

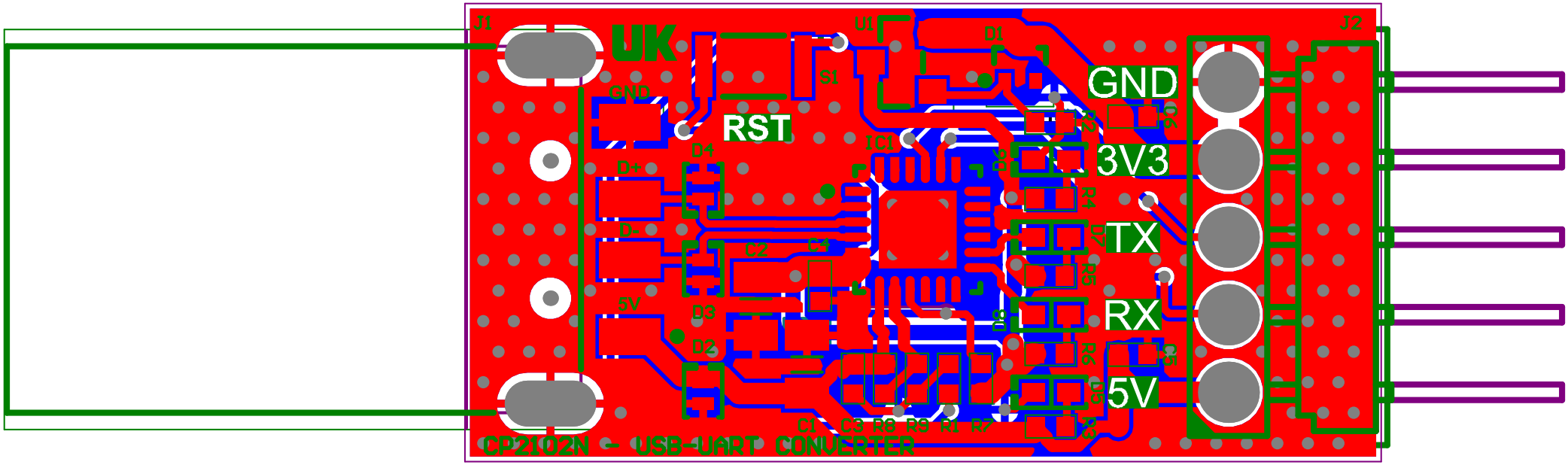
J1
UK
U1
J2
GND
RST
S1
D1
GND
3V3
TX
RX
5V
IC1
D4
D+
D-
5V
C2
C4
D3
D2
C1 C3 R8 R9 R1 R7
CP2102N - USB-UART CONVERTER