A DSP-based RMS/SINAD/THD+N audio meter with analog panel output.

Theory

But what is RMS voltage?

RMS (Root Mean Square) voltage is the effective value of an alternating current (AC) voltage, representing the equivalent direct current (DC) voltage that would produce the same heating effect in a resistor, making power calculations consistent and practical for AC circuits. RMS voltage is often called an “effective voltage”.

For sinusoidal tone:
VRMS=Vpeak/sqrt(2) approx.=0.707*Vpeak

For square wave:
VRMS = Vpeak

For sawtooth or a triangle signal,
VRMS = Vpeak/sqrt(3) approx.= 0.577

For noise, RMS voltage represents its average strength, calculated by squaring instantaneous noise values, averaging them over time (or frequency bandwidth), and then taking the square root: (formula)

For noise, RMS level is defined by bandwidth. Double the bandwidth, and RMS noise amplitude goes up by sqrt(2). Halve the bandwidth, and RMS noise drops by sqrt(2).
A tone doesn’t care about bandwidth. Noise lives inside it.

What is dbV?

The dBV (decibel-Volt) is a unit for measuring voltage levels, specifically referenced to 1 Volt (1 V), commonly used in consumer audio equipment, where 0 dBV equals 1 Volt. It's a logarithmic scale, so positive dBV means more than 1V, negative dBV means less, and it helps compare signal strengths conveniently.

Formula: 20*log10(V/1V)
In addition to dBV, dBmV uses 1 millivolt as a reference point (so 0 dBV = 60 dBmV), and dBuV uses 1 microvolt (so 0 dBV = 120 dBuV).
Examples:

Signal level	Comment
-10 dBV (0.316 V RMS)	Nominal audio signal level commonly used in consumer/home audio equipment
1.79 dBV (1.23 V RMS) = 4 dBu	Nominal signal level for the studio equipment. For the professional/studio equipment, they often use dBu units (referenced to 0.775 V instead of 1 V), so dBu = dBV + 2.21.

For conversion between V_{RMS}, V_{PEAK}, dBu and dBV, see the online calculator at Analog Devices website:
https://www.analog.com/en/resources/interactive-design-tools/dbconvert.html

What is a SINAD?

SINAD (Signal to Noise and Distortion) is a measurement that tells you how usable a signal is when noise and distortion are both trying to ruin it. SINAD is widely used in analog radio communications measurements.

Formula: SINAD(dB) = 20*log10((S+N+D)/(N+D))
Where S is the amplitude of a fundamental signal (usually, 1 kHz); N is noise and D is distortion.

In contrast, SINADR (Signal to Noise and Distortion Ratio), used in digital DAC/ADC measurements, has a slightly different formula:

SINADR(dB) =20*log10(S/(N+D))

Here is the relationship between SINAD and SINADR for common values:

SINAD	SINADR
6 dB	5.00 dB
10 dB	9.59 dB

12 dB	11.72 dB
5 dB	14.86 dB
20 dB	19.96 dB

Examples:

Signal	SINAD
Ideal sine wave	Infinitely large
Noisy or distorted signals	Lower values
Triangle wave	18.3 dB *
For the purpose of testing the communications receivers	12 dB is the most commonly used value, it corresponds to the level of the radio signal, which provides reliable reception of audio
Ideal 50% duty-cycle square wave	7.2 dB *
Sawtooth signal	4.1 dB *
Noise	0

* Real SINAD meters are bandwidth-limited (e.g., 3–25 kHz). Higher harmonics get filtered out, so a real meter may show a slightly higher SINAD.

What is the THD?

THD means Total Harmonic Distortion. It answers a very specific question: How much of the signal's energy is in harmonics instead of the fundamental (usually, 1 kHz)?

Formula: THD = (V2^2+V3^2,…)/V1
Where V1, V2, V3… are the amplitudes of corresponding harmonics.

However, it is more practical and more common between devices to measure THD+N (Total Harmonic Distortion Plus Noise), which gives very close results compared to just THD.
The THD is usually expressed in percent.

Examples:

Signal	THD
Ideal sine wave	0
Hi-fi amplifier	< 0.1%
Broadcasting FM receiver	< 1%
Radio communications receiver	< 10%
Triangle wave	12.1%
Pure square wave	48.3%
Sawtooth signal	80.3%

There is a simple relationship between the SINAD and THD:

$SINAD(dB) = -20*\log_{10}((THD+N) / 100\%)$

and

$THD+N = 10^{(-SINAD/20)} * 100\%$

SINAD	THD+N
0 dB	100%
5 dB	56.23%
10 dB	31.62%
15 dB	**17.78%**
20 dB	**10.00%**
25 dB	**5.62%**
30 dB	**3.16%**
35 dB	**1.78%**
40 dB	**1.00%**

How does the RMS/SINAD/THT+D meter work?

The heart of the device is ADAU1701, a SigmaDSP® 28/56-bit audio processor chip. It does all the analog digital jobs, without the need of an external general purpose micro controller.

RMS/SINAD/THD+N meter: the analog signal is digitized by the ADC (Analog-to-Digital Converter), running at 48 kHz sample rate. There are two RMS detector logical blocks in the circuit: the first one measures the unfiltered input audio, while the second one is connected to the output of the notch filter, which removes the 1 kHz component. In RMS measurement mode, only the first RMS detector is used, passing its output to the analog panel meter via the DAC. In SINAD measurement mode, output levels from the two RMS detectors are subtracted. In THD+D measurement mode, signal level is additionally shifted.

1 kHz signal generator: two DDS (Digital Signal Synthesizers) form both sine wave and square wave signals, which are fed to DACs (Digital-to-Analog Converters) through the level adjustment circuit.

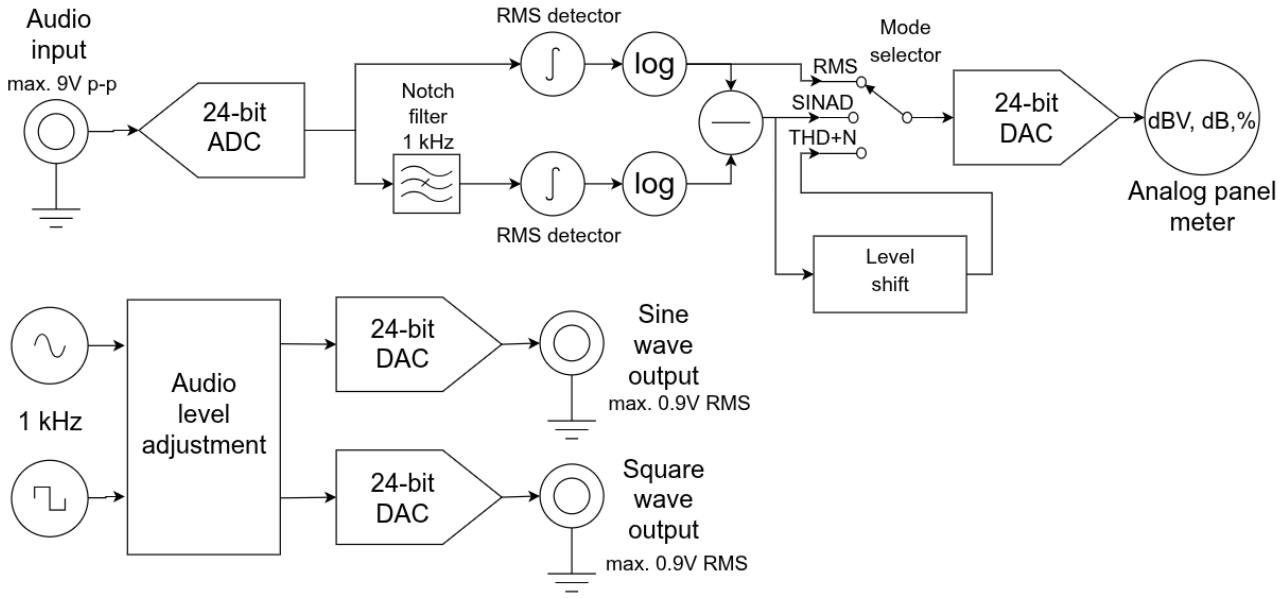

Specifications:

Input impedance: approx. 50 kOhm
Maximum audio input: 10 dBV (3.16V RMS, 9 V p-p)
Operating frequency for measuring SINAD, THD+N: 1 kHz +- 1 Hz
Audio bandwidth: 0.01 to 24 kHz

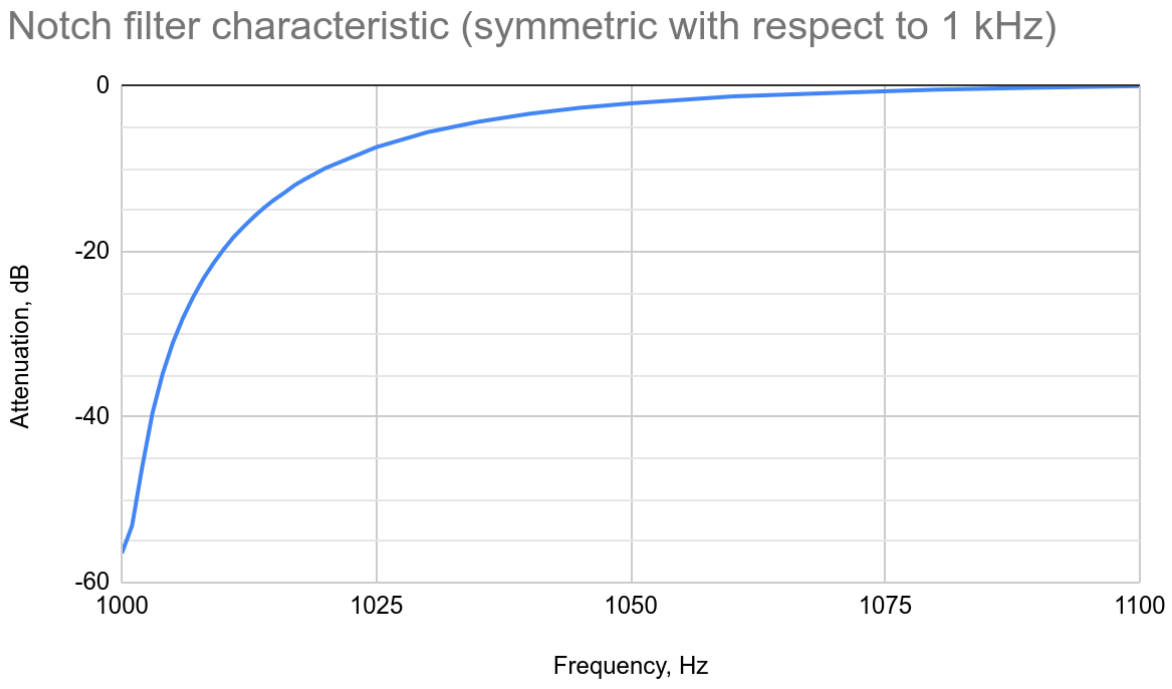

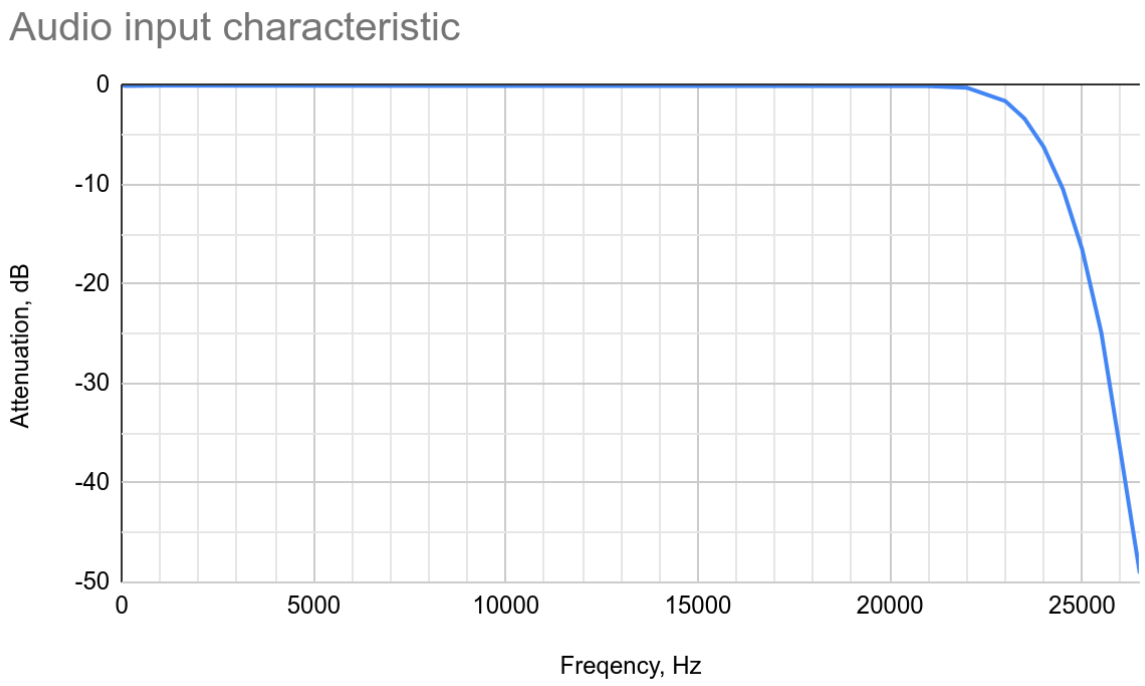

Measurement ranges:

Mode of operation	Condition	Lower limit	Higher limit
RMS	Sine wave at the	-40 dBV (0.1 V	10 dBV (3.16 V RMS, 9 V

measurement	input connector	RMS, 0.03 V p-p)	p-p)
SINAD measurement	Input signal level is -20 dBV (0.1 V RMS) or higher	0 dB	20 dB
THD+N measurement	Input signal level is -20 dBV (0.1 V RMS) or higher	1% (40 dB)	17.8% (15 dB)

Output signals:

Frequency	1 kHz +- 1 Hz
Sine wave and square wave outputs	0.9V RMS
THD of the sine wave	better than 0.1%
Amplitude adjustment for both sine and square wave outputs	0 to -40 dB, with 1 dB steps

Practice

Turning on the RST-meter

Once the device is turned on, the needle of the analog panel meter goes from zero to its maximum position for 4 seconds, so the user can make sure the panel meter is operating correctly.

Use the mode selection button to cycle between RMS IN, RMS OUT, SINAD and THD+N modes, indicated by corresponding LEDs.

To adjust the signal levels of the output test signals (both sine and square wave outputs) with 1 dB step, use the up and down buttons. In the RMS OUT mode, you will see the current output level on the panel meter. RMS levels at sine wave and square wave outputs are always equal.

Measurements of own output signals

By connecting test outputs (sine and square waves) to the input of the device, various test measurements may be performed:

Mode of operation	Audio input is connected to	Expected value

RMS IN	sine or square wave output with maximum output amplitude	-0.9 dBV (0.9 V RMS)
RMS IN	sine or square wave output; adjust output amplitude with up and down buttons	decreases down to -40 dBV (0.01 V RMS) with 1 dB steps
SINAD	sine wave output	maximum scale
SINAD	square wave output	slightly higher than 7.2 dB
THD+N	sine wave output	minimum scale
THD+N	square wave output	maximum scale

Connecting your device to the receiver output, please notice the following:

- The RST meter should be connected to the speaker/headphone output of the receiver so the signal path includes the full receiver circuit: de-emphasis, low pass filter and output audio amplifier.
- The audio output of the receiver should be loaded with nominal impedance of the speaker/headphone, such as 4, 8, 16 or 32 Ohm.
- The squelch should be turned off during the measurement.
- Do not connect your RST meter directly to the output of the FM discriminator: without the de-emphasis and the low-pass filtering, you may get readings which are a few dB off.

Practical measurement of the broadcasting FM receiver sensitivity using the quieting method.

The quieting method is widely used for testing the sensitivity of the broadcasting radio receivers. It requires an unmodulated carrier only (i.e. no AM or FM modulation required). The quieting factor is usually 20 dB (10 times), this is how quieter the output becomes when you put a radio signal at the input of the receiver.

1) Turn off your radio signal generator. Adjust the volume control so the needle is located at the right half of the scale, receiving noise.
2) Turn on your radio signal generator. Adjust the amplitude of the generator, so the meter shows 20 dB less (10 times quieter) than the previous reading.
3) The amplitude of the radio signal is now equal to the sensitivity of the receiver, according to the quieting method.

Practical measurement of communications receiver sensitivity using the SINAD method.

The SINAD method is usually used for FM communications receivers, requiring a radio carrier to be modulated (usually) with 1 kHz tone at 3 kHz deviation. The amplitude of the radio signal from the generator is adjusted so the SINAD becomes (most often) 12 dB at the output of the receiver. However, other numbers may be used, depending on the test procedure: Recommendation ITU-R SM.1840-0 suggests using deviations of 2.4 kHz for HF (8 kHz bandwidth) and 5 kHz for VHF/UHF (15 kHz bandwidth) at 20 dB SINAD, for testing radio monitoring receivers.

For SSB and CW receivers, an unmodulated carrier is used, so the audio tone at the output of the receiver is 1 kHz. The corresponding SINAD ratios are usually 10 dB and 3 dB. Please notice that the readings heavily depend on the receiver bandwidth, which is usually 2400 Hz (SSB) and 500 Hz (CW). Other numbers may be used in different test procedures, such as 2700 or 3000 Hz for SSB and 150 or 300 Hz for CW.

Fortunately, it is quite easy to re-calculate the required SINAD for these different bandwidths. In this case, the level of the 1 kHz is unchanged; only the noise power is changed.

Formula: $SINAD_2 = SINAD_1 + 10 \cdot \log_{10}(BW_1 / BW_2)$

SSB:

SINAD	Bandwidth
10 dB	2400 Hz
9.5 dB	2700 Hz
9 dB	3000 Hz

CW:

SINAD	Bandwidth
3 dB	500 Hz
5.2 dB	300 Hz
8 dB	150 Hz

For example, if the test procedure requires 10 dB SINAD within the 2400 Hz bandwidth, but your receiver can only be set to 3000 Hz bandwidth, use the value of 9 dB during testing.

For AM receivers, an AM-modulated signal is used with (usually) 1 kHz modulation frequency and a modulation index of 0.5 (50%). SINAD value of 12 dB should be achieved by adjusting the amplitude of the radio frequency generator.

References:

Measuring FM Receiver Sensitivity - https://www.repeater-builder.com/tech-info/receiver-sensitivity.html

Receiver Test Data - http://www.sherweng.com/table.html

Recommendation ITU-R SM.1840-0, Test procedure for measuring the sensitivity of radio monitoring receivers using analogue-modulated signals - https://www.itu.int/dms_pubrec/itu-r/rec/sm/R-REC-SM.1840-0-200712-I!!PDF-E.pdf