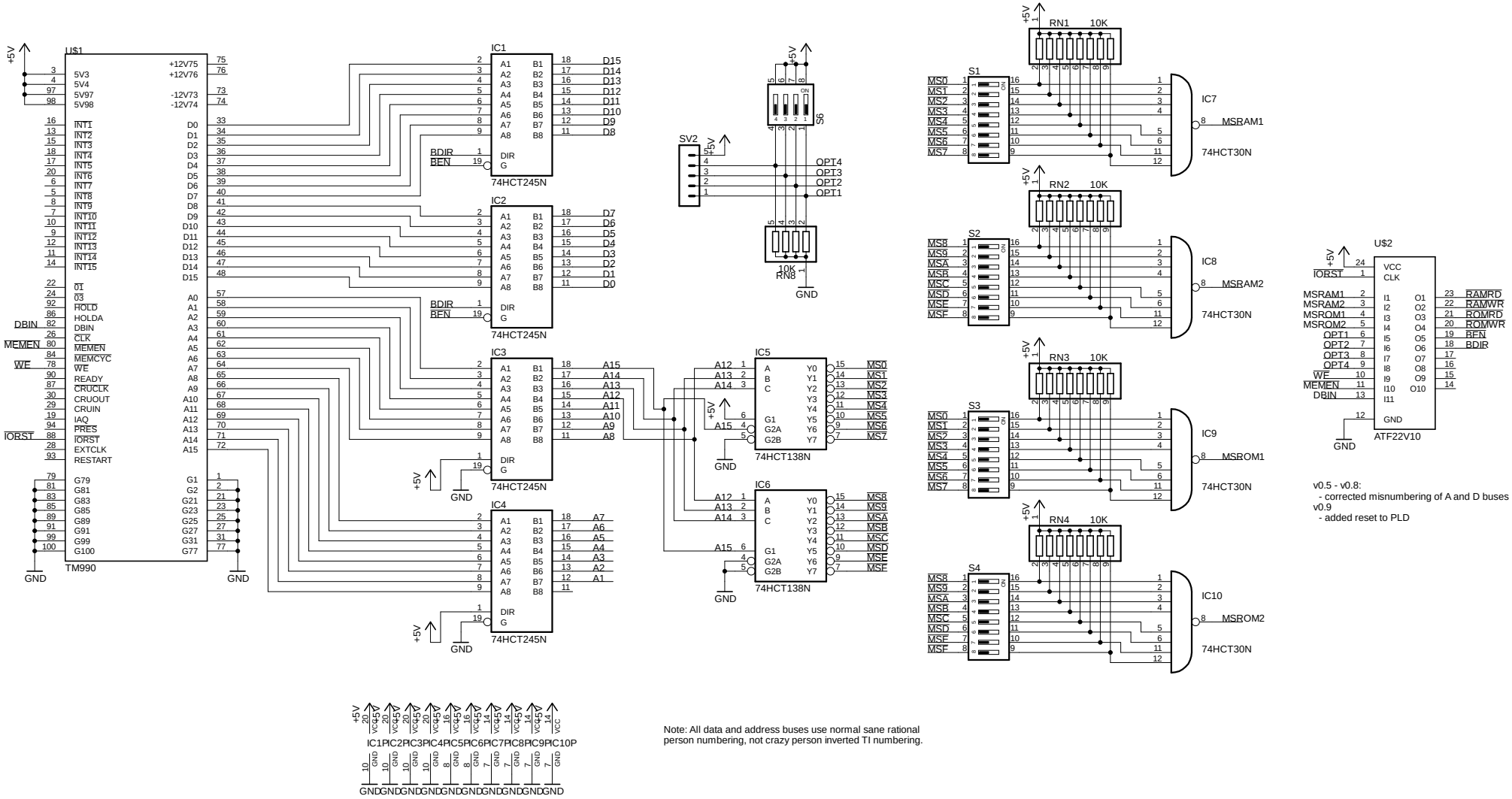
U$1
TM990
IC1
IC2
IC3
IC4
74HCT245N
IC5
IC6
74HCT138N
SV2
S6
RN8
10K
OPT4
OPT3
OPT2
OPT1
RN1
RN2
RN3
RN4
S1
S2
S3
S4
IC7
IC8
IC9
IC10
74HCT30N
MSRAM1
MSRAM2
MSROM1
MSROM2
U$2
ATF22V10
RAMRD
RAMWR
ROMRD
ROMWR
RFN
BDIR
v0.5 - v0.8:
- corrected misnumbering of A and D buses
v0.9
- added reset to PLD
Note: All data and address buses use normal sane rational person numbering, not crazy person inverted TI numbering.

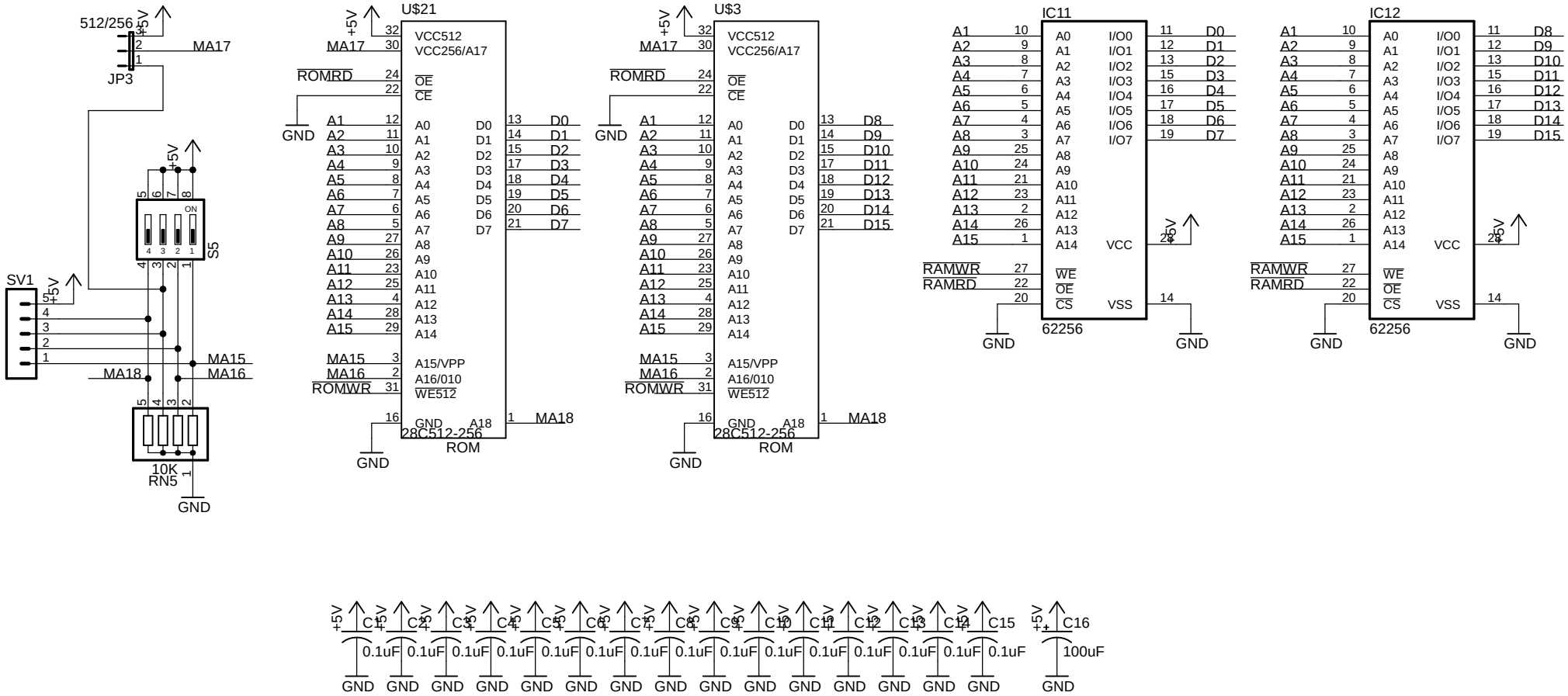
512/256
JP3
MA17
+5V
S5
ON
SV1
MA15
MA16
MA18
10K
RN5
GND
U$21
VCC512
VCC256/A17
ROMRD
OE
CE
A0
A1
A2
A3
A4
A5
A6
A7
A8
A9
A10
A11
A12
A13
A14
A15/VPP
A16/010
WE512
ROMWR
GND
A18
28C512-256
ROM
D0
D1
D2
D3
D4
D5
D6
D7
U$3
D8
D9
D10
D11
D12
D13
D14
D15
IC11
IC12
I/O0
I/O1
I/O2
I/O3
I/O4
I/O5
I/O6
I/O7
VCC
VSS
RAMWR
RAMRD
WE
CS
62256
C1
C2
C3
C4
C5
C6
C7
C8
C9
C10
C11
C12
C13
C14
C15
C16
0.1uF
100uF

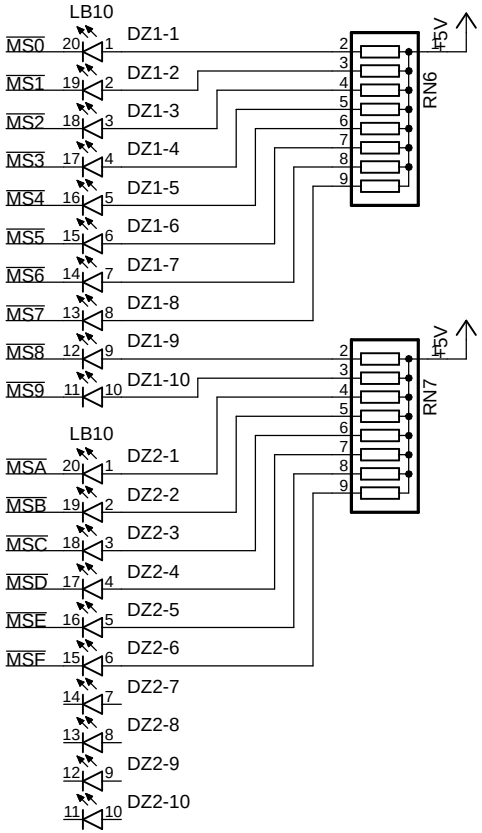
LB10
MS0
MS1
MS2
MS3
MS4
MS5
MS6
MS7
MS8
MS9
DZ1-1
DZ1-2
DZ1-3
DZ1-4
DZ1-5
DZ1-6
DZ1-7
DZ1-8
DZ1-9
DZ1-10
+5V
RN6
RN7
LB10
MSA
MSB
MSC
MSD
MSE
MSF
DZ2-1
DZ2-2
DZ2-3
DZ2-4
DZ2-5
DZ2-6
DZ2-7
DZ2-8
DZ2-9
DZ2-10