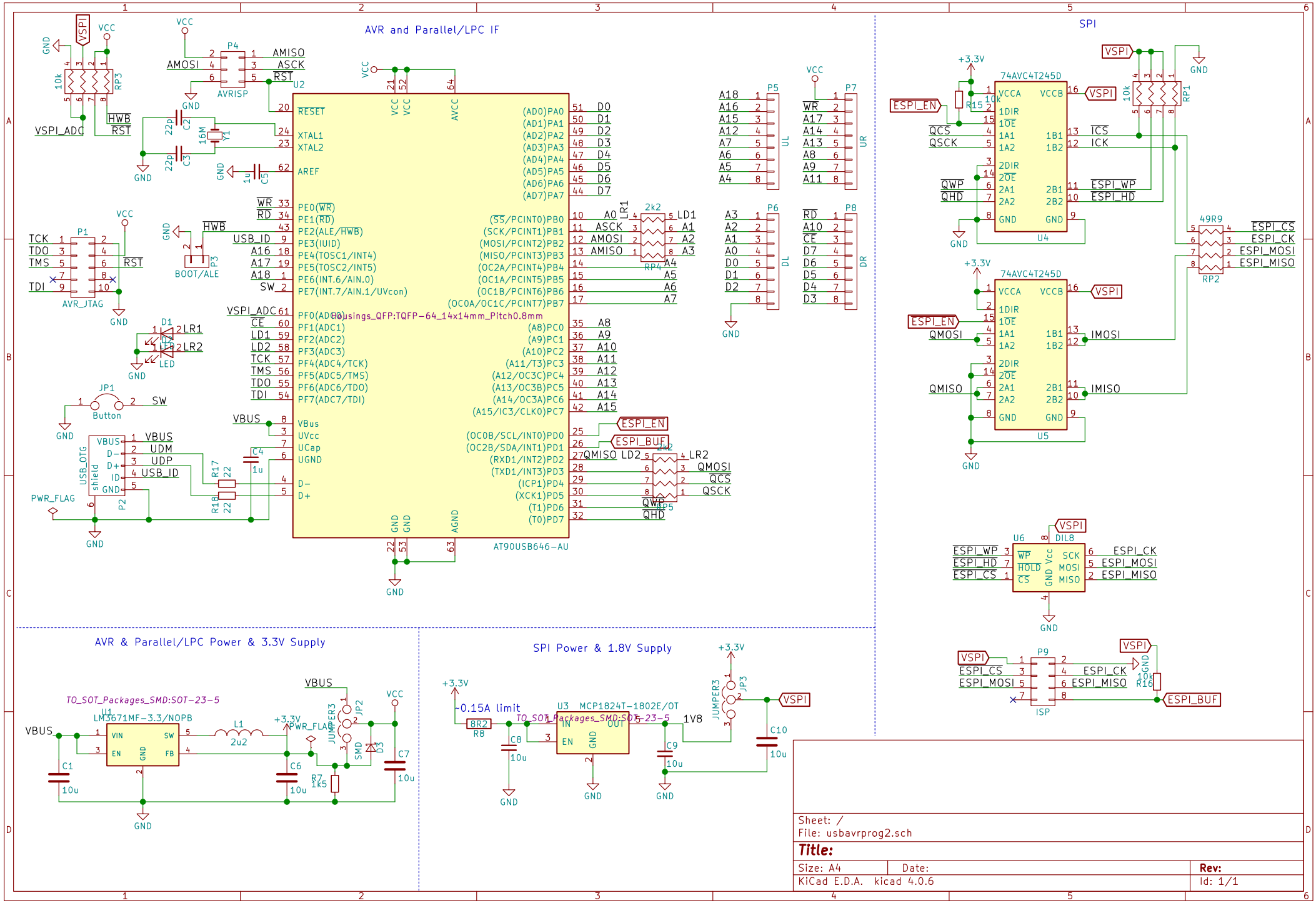
AVR and Parallel/LPC IF
SPI
AVR & Parallel/LPC Power & 3.3V Supply
SPI Power & 1.8V Supply
AT90USB646-AU
Housings_QFP:TQFP-64_14x14mm_Pitch0.8mm
74AVC4T245D
LM3671MF-3.3/NOPB
MCP1824T-1802E/OT
TO_SOT_Packages_SMD:SOT-23-5
~0.15A limit
Sheet: /
File: usbavrprog2.sch
Title:
Size: A4
Date:
Rev:
KiCad E.D.A. kicad 4.0.6
Id: 1/1