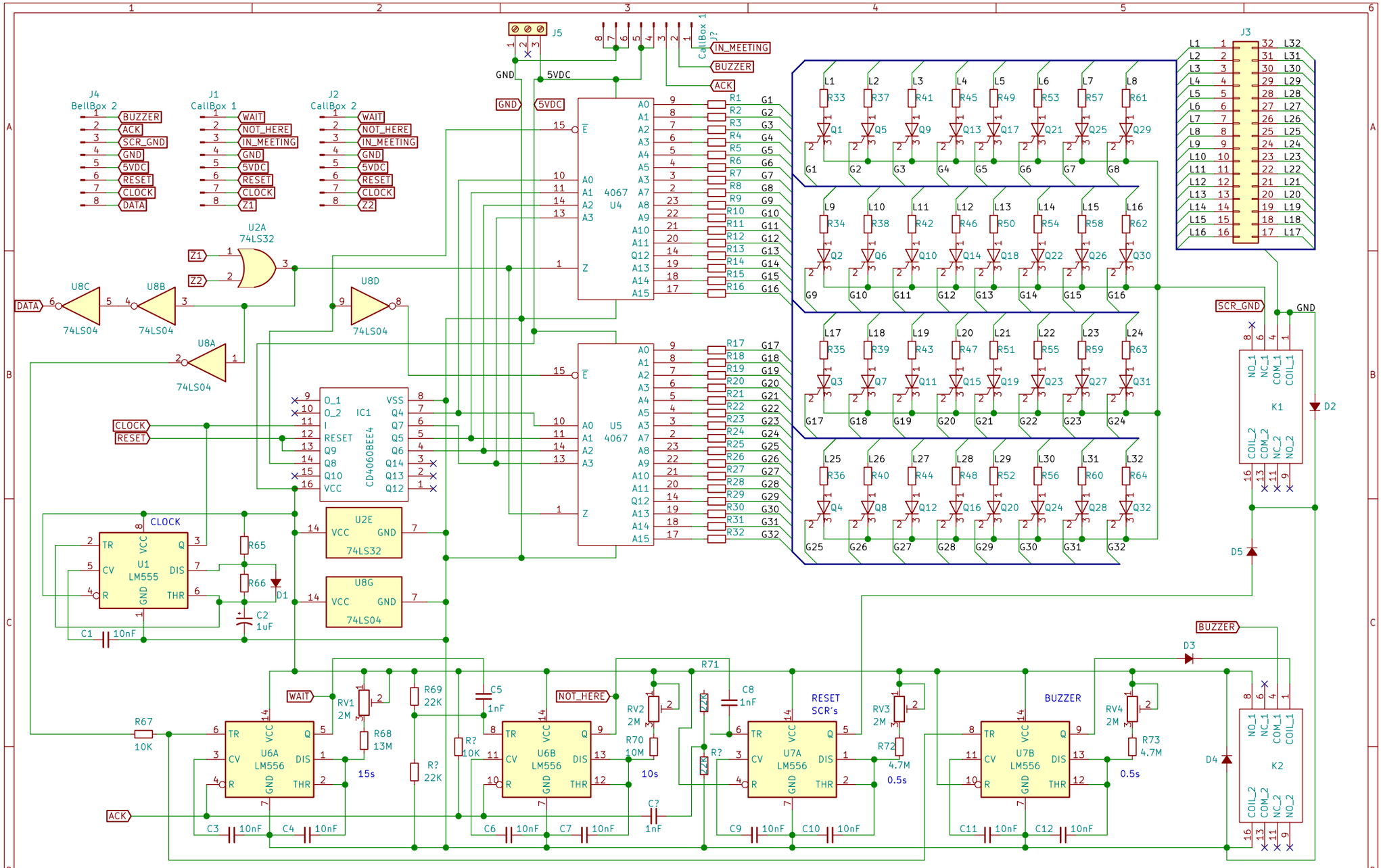

Receives both multiplexed data, adds them then Demultiplexes Data
Locally latches SCR's with 555 timer With Relay to Unlatch

Royal Australian Navy

Sheet: /
File: BellBox_Master.sch

Title: BellBox_Master

Size: User	Date:	**Rev:**
KiCad E.D.A. kicad (5.1.2)-2		Id: 1/1