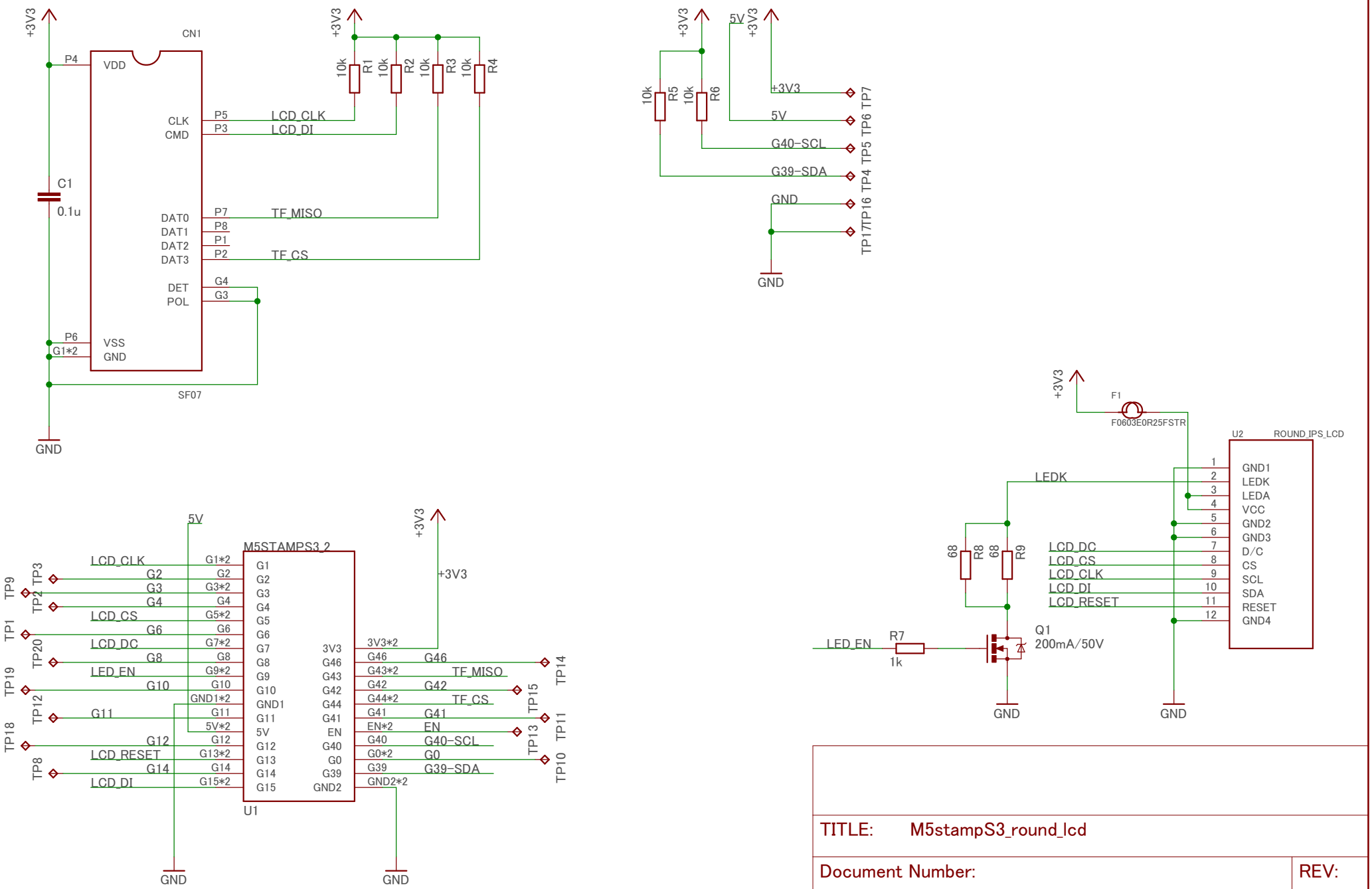

TITLE:	M5stampS3_round_lcd
Document Number:	REV:
Date: 2023/02/15 23:08	Sheet: 1/1