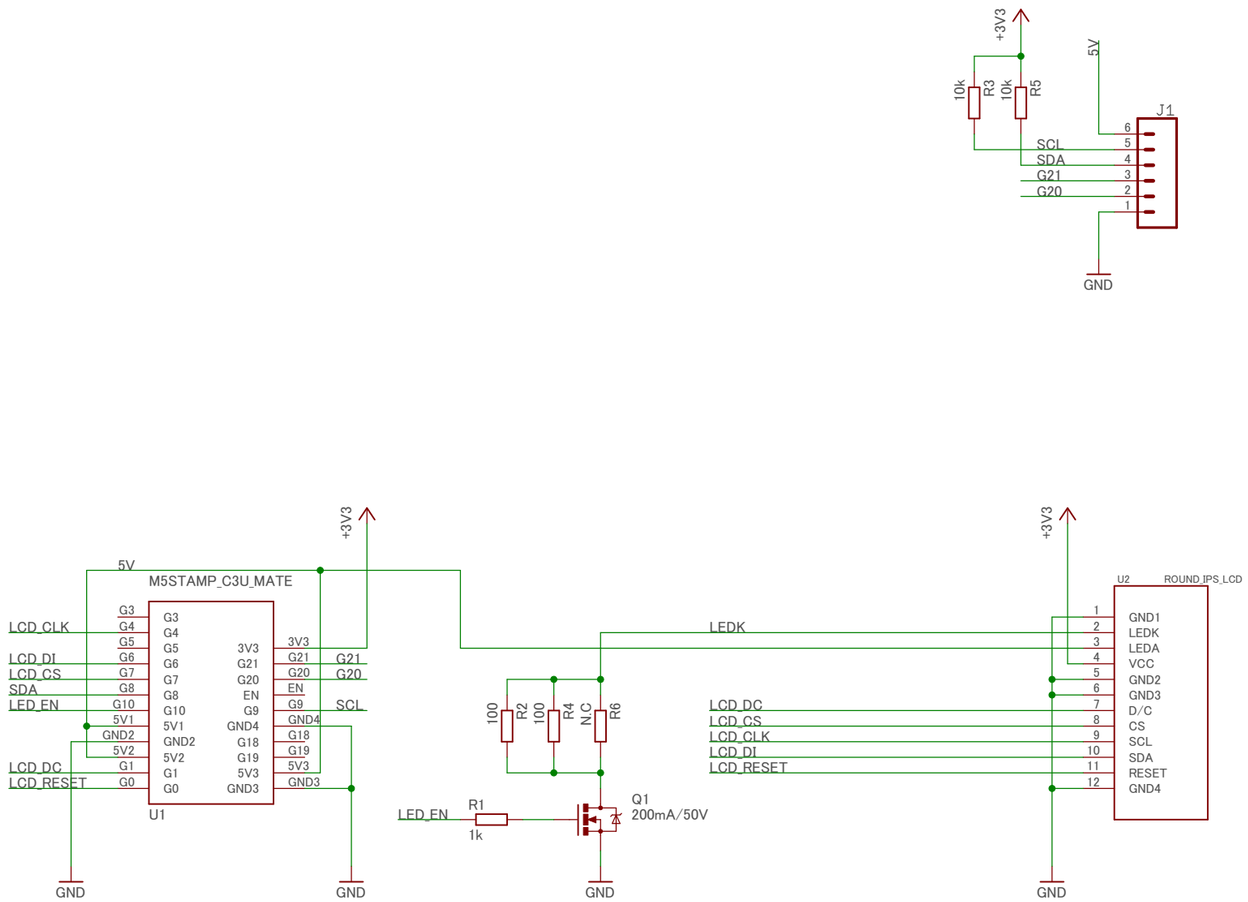

Title:	M5stamp_round_lcd
Version:	
2022/04/06 21:41	
Drawn By:	1/1