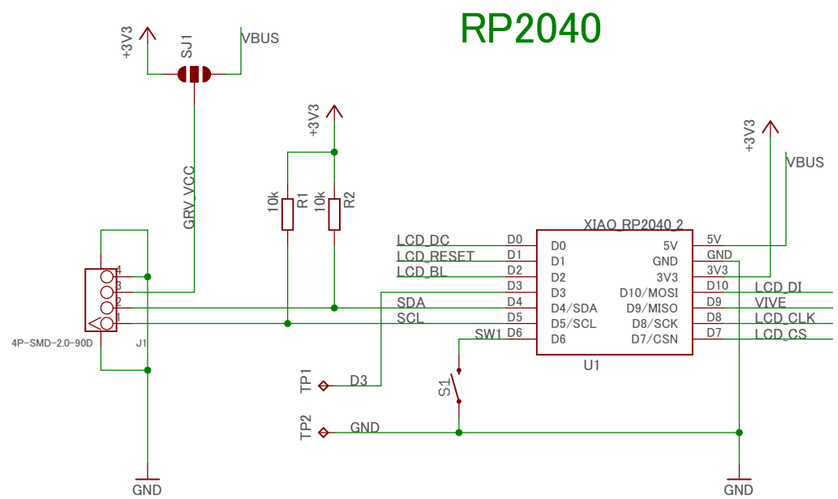

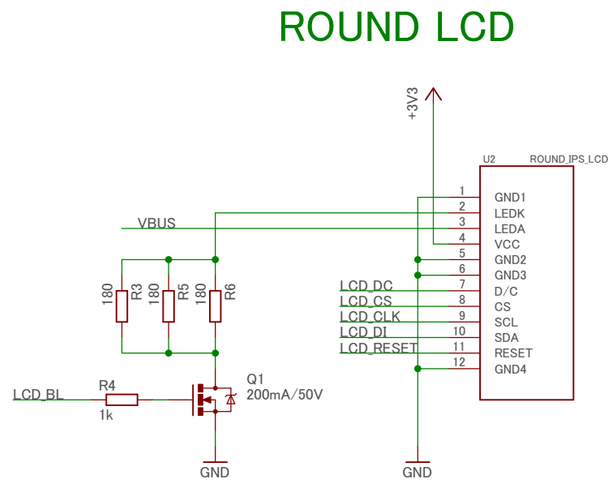

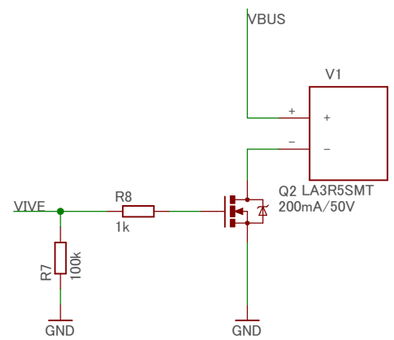

Title: xiao_rp2040_round_lcd	
Version:	
2022/06/26 10:22	
Drawn By:	1/1