SEQN: 22384 / T7 / EJAC FROM: SP	Ply: 1 Qty: 28 Wgt: 18.2 lbs	**Job Number:** B26168 Zehr **Truss Label:** T7	DRW: ... / ... 09/21/2023

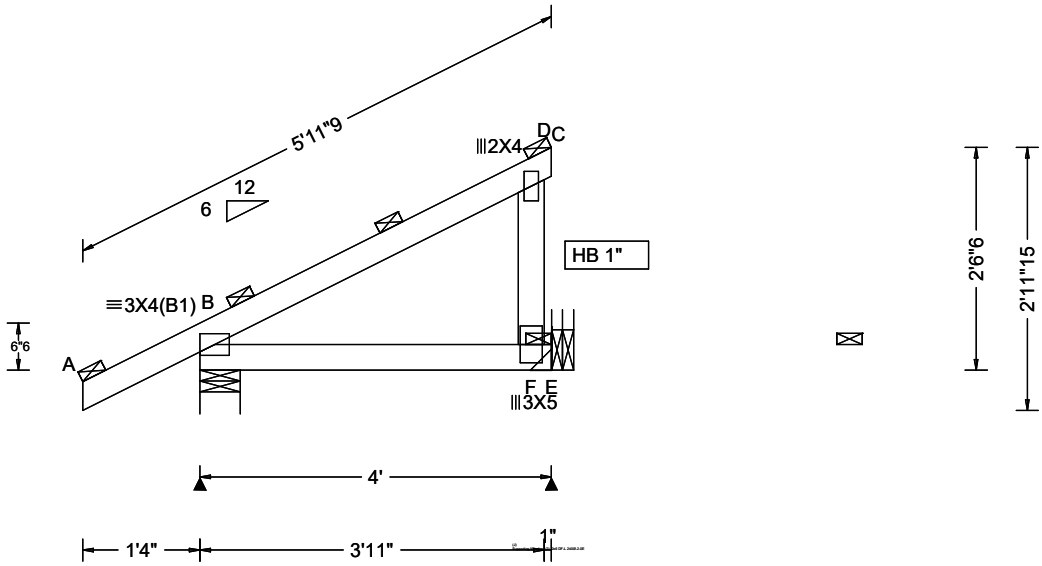

Loading Criteria (psf)
TCLL: 25.00
TCDL: 7.00
BCLL: 0.00
BCDL: 10.00
Des Ld: 42.00
NCBCLL: 10.00
Soffit: 2.00
Load Duration: 1.15
Spacing: 24.0 "

Wind Criteria
Wind Std: ASCE 7-16
Speed: 115 mph
Enclosure: Closed
Risk Category: II
EXP: C Kzt: NA
Mean Height: 15.00 ft
TCDL: 4.0 psf
BCDL: 6.0 psf
MWFRS Parallel Dist: 0 to h/2
C&C Dist a: 3.00 ft
Loc. from endwall: Any
GCpi: 0.18
Wind Duration: 1.33

Snow Criteria (Pg,Pf in PSF)
Pg: 25.0 Ct: 1.1 CAT: II
Pf: 19.2 Ce: 1.0
Lu: - Cs: 1.00
Snow Duration: 1.15

Building Code:
IRC 2021
TPI Std: 2014
Rep Fac: Yes
FT/RT:20(0)/10(0)
Plate Type(s):
WAVE

Defl/CSI Criteria
PP Deflection in loc L/defl L/#
VERT(LL): NA
VERT(CL): NA
HORZ(LL): 0.001 B - -
HORZ(TL): 0.002 B - -
Creep Factor: 2.0
Max TC CSI: 0.155
Max BC CSI: 0.085
Max Web CSI: 0.062
Mfg Specified Camber:

VIEW Ver: 23.01.00A.0426.17

▲ Maximum Reactions (lbs)

	Gravity			Non-Gravity		
Loc	R+	/ R-	/ Rh	/ Rw	/ U	/ RL
B	283	/-	/-	/150	/17	/69
E	153	/-	/-	/87	/26	/-

Wind reactions based on MWFRS
B Brg Wid = 5.5 Min Req = 1.5 (Truss)
E Brg Wid = - Min Req = -
Bearing B is a rigid surface.

Maximum Top Chord Forces Per Ply (lbs)

Chords	Tens.	Comp.	Chords	Tens.	Comp.
A - B	42	0	C - D	0	-2
B - C	40	-78			

Maximum Bot Chord Forces Per Ply (lbs)

Chords	Tens.	Comp.	Chords	Tens.	Comp.
B - F	8	-8	F - E	0	0

Maximum Web Forces Per Ply (lbs)

Webs	Tens.	Comp.
C - F	157	-111

Lumber

Top chord: 2x4 :DF-L #1&Bet. + DF-L 1800f-1.6E:;
Bot chord: 2x4 :DF-L #1&Bet. + DF-L 1800f-1.6E:;
Webs: 2x4 DF-L(N) #1/#2;

Purlins

In lieu of structural panels or rigid ceiling use purlins to laterally brace chords as follows:

Chord	Spacing(in oc)	Start(ft)	End(ft)
TC	24	-1.33	4.00
BC	46	0.17	4.00

Apply purlins to any chords above or below fillers at 24" OC unless shown otherwise above.

Hangers / Ties

(J) Hanger Support Required, by others

Loading

Bottom chord checked for 10.00 psf non-concurrent live load.

Wind

Wind loads based on MWFRS with additional C&C member design.

Right end vertical not exposed to wind pressure.

Wind loading based on both gable and hip roof types.

****WARNING**** READ AND FOLLOW ALL NOTES ON THIS DRAWING!
****IMPORTANT**** FURNISH THIS DRAWING TO ALL CONTRACTORS INCLUDING THE INSTALLERS

Trusses require extreme care in fabricating, handling, shipping, installing and bracing. Refer to and follow the latest edition of BCSI (Building Component Safety Information, by TPI and SBCA) for safety practices prior to performing these functions. Installers shall provide temporary bracing per BCSI. Unless noted otherwise, top chord shall have properly attached structural sheathing and bottom chord shall have a properly attached rigid ceiling. Locations shown for permanent lateral restraint of webs shall have continuous lateral restraint (CLR), installed with diagonal bracing installed on the CLR per BCSI sections B3, B7, or B10, as applicable. Apply plates to each face of truss and position as shown above and on the Joint Details, unless noted otherwise. Refer to drawings 160A-Z for standard plate positions. Refer to job's General Notes page for additional information.

Alpine, a division of ITW Building Components Group Inc. shall not be responsible for any deviation from this drawing, any failure to build the truss in conformance with ANSI/TPI 1, or for handling, shipping, installation and bracing of trusses. A seal on this drawing or cover page listing this drawing, indicates acceptance of professional engineering responsibility solely for the design shown. The suitability and use of this drawing for any structure is the responsibility of the Building Designer per ANSI/TPI 1 Sec.2.

For more information see these web sites: Alpine: alpineitw.com; TPI: tpinst.org; SBCA: sbcacomponents.com; ICC: iccsafe.org; AWC: awc.org

SEQN: 22325 / T4 / JACK FROM: SP	Ply: 1 Qty: 10 Wgt: 8.4 lbs	**Job Number:** B26168 Zehr **Truss Label:** CJ2	DRW: ... / ... 09/21/2023

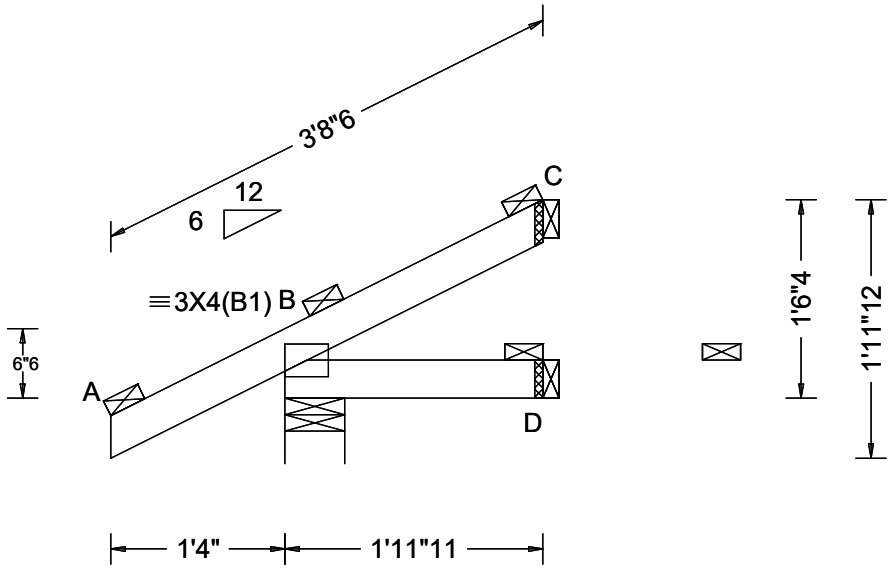

Loading Criteria (psf)

TCLL: 25.00
TCDL: 7.00
BCLL: 0.00
BCDL: 10.00
Des Ld: 42.00
NCBCLL: 10.00
Soffit: 2.00
Load Duration: 1.15
Spacing: 24.0 "

Wind Criteria

Wind Std: ASCE 7-16
Speed: 115 mph
Enclosure: Closed
Risk Category: II
EXP: C Kzt: NA
Mean Height: 15.00 ft
TCDL: 4.0 psf
BCDL: 6.0 psf
MWFRS Parallel Dist: 0 to h/2
C&C Dist a: 3.00 ft
Loc. from endwall: Any
GCpi: 0.18
Wind Duration: 1.33

Snow Criteria (Pg,Pf in PSF)

Pg: 25.0 Ct: 1.1 CAT: II
Pf: 19.2 Ce: 1.0
Lu: - Cs: 1.00
Snow Duration: 1.15

Building Code:
IRC 2021
TPI Std: 2014
Rep Fac: Yes
FT/RT:20(0)/10(0)
Plate Type(s):
WAVE

Defl/CSI Criteria

PP Deflection in	loc	L/defl	L/#
VERT(LL): NA			
VERT(CL): NA			
HORZ(LL): -0.001	C	-	-
HORZ(TL): 0.001	C	-	-

Creep Factor: 2.0
Max TC CSI: 0.109
Max BC CSI: 0.018
Max Web CSI: 0.000
Mfg Specified Camber:

VIEW Ver: 23.01.00A.0426.17

▲ Maximum Reactions (lbs)

	Gravity			Non-Gravity		
Loc	R+	/ R-	/ Rh	/ Rw	/ U	/ RL
B	219	/-	/-	/119	/22	/41
D	35	/-	/-	/18	/-	/-
C	30	/-	/-	/15	/18	/-

Wind reactions based on MWFRS
B Brg Wid = 5.5 Min Req = 1.5 (Truss)
D Brg Wid = 1.5 Min Req = -
C Brg Wid = 1.5 Min Req = -
Bearing B is a rigid surface.

Maximum Top Chord Forces Per Ply (lbs)

Chords	Tens.	Comp.	Chords	Tens.	Comp.
A - B	42	0	B - C	14	-41

Maximum Bot Chord Forces Per Ply (lbs)

Chords	Tens.	Comp.
B - D	0	0

Lumber

Top chord: 2x4 :DF-L #1&Bet. + DF-L 1800f-1.6E:;
Bot chord: 2x4 :DF-L #1&Bet. + DF-L 1800f-1.6E:;

Purlins

In lieu of structural panels or rigid ceiling use purlins to laterally brace chords as follows:

Chord	Spacing(in oc)	Start(ft)	End(ft)
TC	24	-1.33	1.97
BC	22	0.17	1.97

Apply purlins to any chords above or below fillers at 24" OC unless shown otherwise above.

Loading

Bottom chord checked for 10.00 psf non-concurrent live load.

Wind

Wind loads based on MWFRS with additional C&C member design.

Wind loading based on both gable and hip roof types.

****WARNING**** READ AND FOLLOW ALL NOTES ON THIS DRAWING!
****IMPORTANT**** FURNISH THIS DRAWING TO ALL CONTRACTORS INCLUDING THE INSTALLERS

Trusses require extreme care in fabricating, handling, shipping, installing and bracing. Refer to and follow the latest edition of BCSI (Building Component Safety Information, by TPI and SBCA) for safety practices prior to performing these functions. Installers shall provide temporary bracing per BCSI. Unless noted otherwise, top chord shall have properly attached structural sheathing and bottom chord shall have a properly attached rigid ceiling. Locations shown for permanent lateral restraint of webs shall have continuous lateral restraint (CLR), installed with diagonal bracing installed on the CLR per BCSI sections B3, B7, or B10, as applicable. Apply plates to each face of truss and position as shown above and on the Joint Details, unless noted otherwise. Refer to drawings 160A-Z for standard plate positions. Refer to job's General Notes page for additional information.

Alpine, a division of ITW Building Components Group Inc. shall not be responsible for any deviation from this drawing, any failure to build the truss in conformance with ANSI/TPI 1, or for handling, shipping, installation and bracing of trusses. A seal on this drawing or cover page listing this drawing, indicates acceptance of professional engineering responsibility solely for the design shown. The suitability and use of this drawing for any structure is the responsibility of the Building Designer per ANSI/TPI 1 Sec.2.

For more information see these web sites: Alpine: alpineitw.com; TPI: tpinst.org; SBCA: sbcacomponents.com; ICC: iccsafe.org; AWC: awc.org

SEQN: 22333 / T3 / MONO FROM: SP	Ply: 2 Qty: 1 Wgt: 30.8 lbs	**Job Number:** B26168 Zehr **Truss Label:** MG2	DRW: ... / ... 09/21/2023

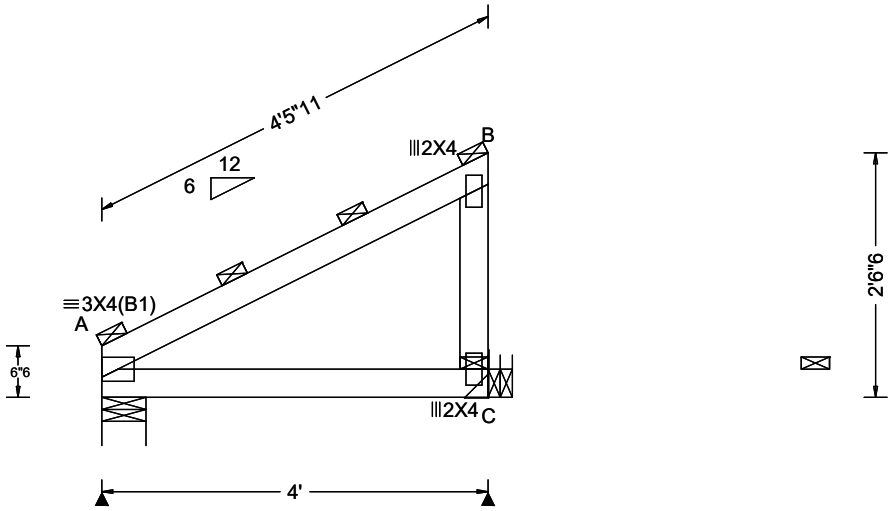

Loading Criteria (psf)
TCLL: 25.00
TCDL: 7.00
BCLL: 0.00
BCDL: 10.00
Des Ld: 42.00
NCBCLL: 0.00
Soffit: 2.00
Load Duration: 1.15
Spacing: 24.0 "

Wind Criteria
Wind Std: ASCE 7-16
Speed: 115 mph
Enclosure: Closed
Risk Category: II
EXP: C Kzt: NA
Mean Height: 15.00 ft
TCDL: 4.0 psf
BCDL: 6.0 psf
MWFRS Parallel Dist: 0 to h/2
C&C Dist a: 3.00 ft
Loc. from endwall: Any
GCpi: 0.18
Wind Duration: 1.33

Snow Criteria (Pg,Pf in PSF)
Pg: 25.0 Ct: 1.1 CAT: II
Pf: 19.2 Ce: 1.0
Lu: - Cs: 1.00
Snow Duration: 1.15

Building Code:
IRC 2021
TPI Std: 2014
Rep Fac: Varies by Ld Case
FT/RT:20(0)/10(0)
Plate Type(s):
WAVE

Defl/CSI Criteria
PP Deflection in loc L/defl L/#
VERT(LL): NA
VERT(CL): NA
HORZ(LL): -0.008 A - -
HORZ(TL): 0.013 A - -
Creep Factor: 2.0
Max TC CSI: 0.282
Max BC CSI: 0.841
Max Web CSI: 0.164
Mfg Specified Camber:

VIEW Ver: 23.01.00A.0426.17

▲Maximum Reactions (lbs)

	Gravity			Non-Gravity		
Loc	R+	/ R-	/ Rh	/ Rw	/ U	/ RL
A	1333	/-	/-	/-	/117	/-
C	1252	/-	/-	/-	/110	/-

Wind reactions based on MWFRS
A Brg Wid = 5.5 Min Req = 1.5 (Truss)
C Brg Wid = - Min Req = -
Bearing A is a rigid surface.

Maximum Top Chord Forces Per Ply (lbs)

Chords	Tens.	Comp.
A - B	18	-61

Maximum Bot Chord Forces Per Ply (lbs)

Chords	Tens.	Comp.
A - C	45	-4

Maximum Web Forces Per Ply (lbs)

Webs	Tens.	Comp.
B - C	18	-80

Lumber
Top chord: 2x4 :DF-L #1&Bet. + DF-L 1800f-1.6E:;
Bot chord: 2x4 :DF-L #1&Bet. + DF-L 1800f-1.6E:;
Webs: 2x4 DF-L(N) #1/#2;

Nailnote
Nail Schedule:0.128"x3", min. nails
Top Chord: 1 Row @12.00" o.c.
Bot Chord: 1 Row @ 2.25" o.c.
Webs : 1 Row @ 4" o.c.
Use equal spacing between rows and stagger nails in each row to avoid splitting.

Special Loads
------(Lumber Dur.Fac.=1.15 / Plate Dur.Fac.=1.15)
TC: From 66 plf at 0.00 to 66 plf at 4.00
BC: From 10 plf at 0.00 to 10 plf at 4.00
BC: 1141 lb Conc. Load at 0.98, 2.98

Purlins
In lieu of structural panels or rigid ceiling use purlins to laterally brace chords as follows:

Chord	Spacing(in oc)	Start(ft)	End(ft)
TC	24	0.10	4.00
BC	46	0.17	4.00

Apply purlins to any chords above or below fillers at 24" OC unless shown otherwise above.

Hangers / Ties
(J) Hanger Support Required, by others

Wind
Wind loads and reactions based on MWFRS.
Right end vertical not exposed to wind pressure.
Wind loading based on both gable and hip roof types.

****WARNING**** READ AND FOLLOW ALL NOTES ON THIS DRAWING!
****IMPORTANT**** FURNISH THIS DRAWING TO ALL CONTRACTORS INCLUDING THE INSTALLERS

Trusses require extreme care in fabricating, handling, shipping, installing and bracing. Refer to and follow the latest edition of BCSI (Building Component Safety Information, by TPI and SBCA) for safety practices prior to performing these functions. Installers shall provide temporary bracing per BCSI. Unless noted otherwise, top chord shall have properly attached structural sheathing and bottom chord shall have a properly attached rigid ceiling. Locations shown for permanent lateral restraint of webs shall have continuous lateral restraint (CLR), installed with diagonal bracing installed on the CLR per BCSI sections B3, B7, or B10, as applicable. Apply plates to each face of truss and position as shown above and on the Joint Details, unless noted otherwise. Refer to drawings 160A-Z for standard plate positions. Refer to job's General Notes page for additional information.
Alpine, a division of ITW Building Components Group Inc. shall not be responsible for any deviation from this drawing, any failure to build the truss in conformance with ANSI/TPI 1, or for handling, shipping, installation and bracing of trusses. A seal on this drawing or cover page listing this drawing, indicates acceptance of professional engineering responsibility solely for the design shown. The suitability and use of this drawing for any structure is the responsibility of the Building Designer per ANSI/TPI 1 Sec.2.
For more information see these web sites: Alpine: alpineitw.com; TPI: tpinst.org; SBCA: sbcacomponents.com; ICC: iccsafe.org; AWC: awc.org

SEQN: 22372 / T6 / HIP_ FROM: SP	Ply: 1 Qty: 1 Wgt: 29.4 lbs	**Job Number:** B26168 Zehr **Truss Label:** T6	DRW: ... / ... 09/21/2023

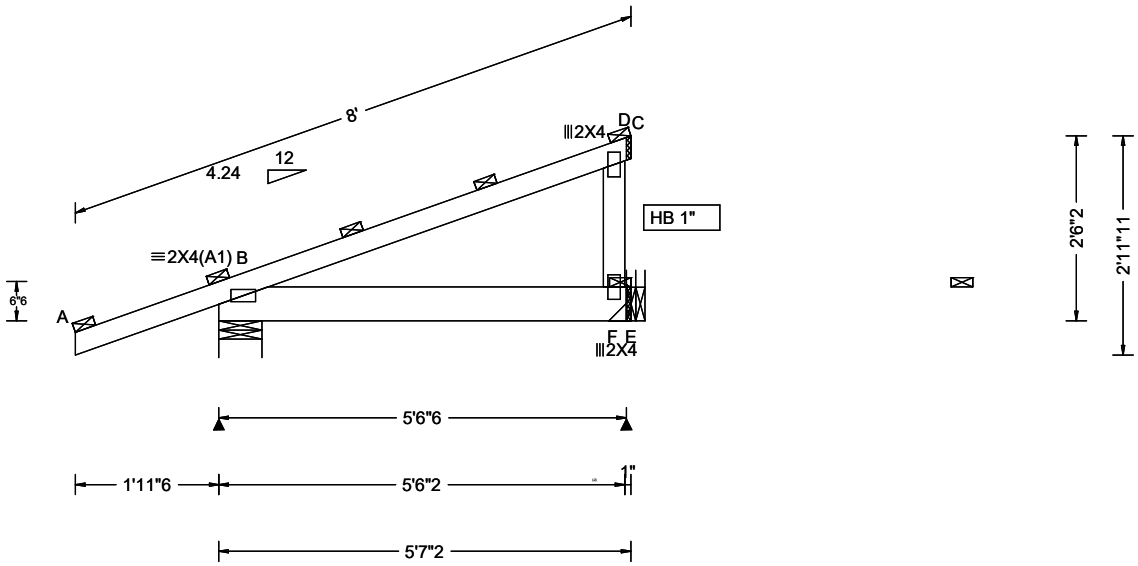

Loading Criteria (psf)
TCLL: 25.00
TCDL: 7.00
BCLL: 0.00
BCDL: 10.00
Des Ld: 42.00
NCBCLL: 10.00
Soffit: 2.00
Load Duration: 1.15
Spacing: 24.0 "

Wind Criteria
Wind Std: ASCE 7-16
Speed: 115 mph
Enclosure: Closed
Risk Category: II
EXP: C Kzt: NA
Mean Height: 15.00 ft
TCDL: 4.0 psf
BCDL: 6.0 psf
MWFRS Parallel Dist: 0 to h/2
C&C Dist a: 3.00 ft
Loc. from endwall: Any
GCpi: 0.18
Wind Duration: 1.33

Snow Criteria (Pg,Pf in PSF)
Pg: 25.0 Ct: 1.1 CAT: II
Pf: 19.2 Ce: 1.0
Lu: - Cs: 1.00
Snow Duration: 1.15

Building Code:
IRC 2021
TPI Std: 2014
Rep Fac: Varies by Ld Case
FT/RT:20(0)/10(0)
Plate Type(s):
WAVE

Defl/CSI Criteria
PP Deflection in loc L/defl L/#
VERT(LL): NA
VERT(CL): NA
HORZ(LL): 0.002 B - -
HORZ(TL): 0.003 B - -
Creep Factor: 2.0
Max TC CSI: 0.166
Max BC CSI: 0.055
Max Web CSI: 0.041
Mfg Specified Camber:

VIEW Ver: 23.01.00A.0426.17

▲ Maximum Reactions (lbs)

	Gravity			Non-Gravity		
Loc	R+	/ R-	/ Rh	/ Rw	/ U	/ RL
B	343	/-	/-	/-	/25	/-
F	178	/-	/-	/-	/1	/-

Wind reactions based on MWFRS
B Brg Wid = 7.0 Min Req = 1.5 (Truss)
F Brg Wid = - Min Req = -
Bearing B is a rigid surface.

Maximum Top Chord Forces Per Ply (lbs)

Chords	Tens.	Comp.	Chords	Tens.	Comp.
A - B	37	- 6	C - D	0	- 1
B - C	26	- 61			

Maximum Bot Chord Forces Per Ply (lbs)

Chords	Tens.	Comp.	Chords	Tens.	Comp.
B - F	11	- 1	F - E	0	0

Maximum Web Forces Per Ply (lbs)

Webs	Tens.	Comp.
C - F	9	- 114

Lumber
Top chord: 2x4 :DF-L #1&Bet. + DF-L 1800f-1.6E:;
Bot chord: 2x6 DF-L 2400f-2.0E;
Webs: 2x4 DF-L(N) #1/#2;

Special Loads
------(Lumber Dur.Fac.=1.15 / Plate Dur.Fac.=1.15)

TC: From	-0 plf at	-1.95 to	65 plf at	0.00
TC: From	2 plf at	0.00 to	2 plf at	5.59
BC: From	0 plf at	-1.95 to	4 plf at	0.00
BC: From	2 plf at	0.00 to	2 plf at	5.53

TC: 61 lb Conc. Load at 2.79
BC: 69 lb Conc. Load at 2.79

Purlins
In lieu of structural panels or rigid ceiling use purlins to laterally brace chords as follows:

Chord	Spacing(in oc)	Start(ft)	End(ft)
TC	24	-1.95	5.59
BC	65	0.15	5.59

Apply purlins to any chords above or below fillers at 24" OC unless shown otherwise above.

Hangers / Ties
(J) Hanger Support Required, by others

Loading
Bottom chord checked for 10.00 psf non-concurrent live load.

Wind
Wind loads and reactions based on MWFRS.
Right end vertical not exposed to wind pressure.
Wind loading based on both gable and hip roof types.

****WARNING**** READ AND FOLLOW ALL NOTES ON THIS DRAWING!
****IMPORTANT**** FURNISH THIS DRAWING TO ALL CONTRACTORS INCLUDING THE INSTALLERS

Trusses require extreme care in fabricating, handling, shipping, installing and bracing. Refer to and follow the latest edition of BCSI (Building Component Safety Information, by TPI and SBCA) for safety practices prior to performing these functions. Installers shall provide temporary bracing per BCSI. Unless noted otherwise, top chord shall have properly attached structural sheathing and bottom chord shall have a properly attached rigid ceiling. Locations shown for permanent lateral restraint of webs shall have continuous lateral restraint (CLR), installed with diagonal bracing installed on the CLR per BCSI sections B3, B7, or B10, as applicable. Apply plates to each face of truss and position as shown above and on the Joint Details, unless noted otherwise. Refer to drawings 160A-Z for standard plate positions. Refer to job's General Notes page for additional information.
Alpine, a division of ITW Building Components Group Inc. shall not be responsible for any deviation from this drawing, any failure to build the truss in conformance with ANSI/TPI 1, or for handling, shipping, installation and bracing of trusses. A seal on this drawing or cover page listing this drawing, indicates acceptance of professional engineering responsibility solely for the design shown. The suitability and use of this drawing for any structure is the responsibility of the Building Designer per ANSI/TPI 1 Sec.2.
For more information see these web sites: Alpine: alpineitw.com; TPI: tpinst.org; SBCA: sbcacomponents.com; ICC: iccsafe.org; AWC: awc.org

SEQN: 22374 / T13 / HIP_ FROM: SP	Ply: 1 Qty: 4 Wgt: 25.2 lbs	**Job Number:** B26168 Zehr **Truss Label:** T13	DRW: ... / ... 09/21/2023

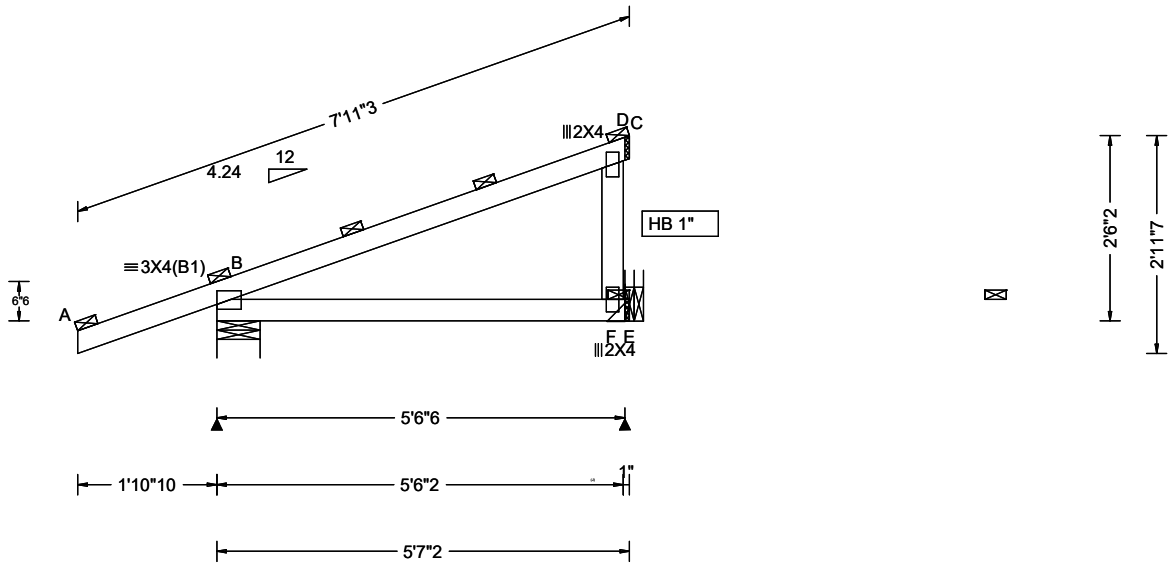

Loading Criteria (psf)
TCLL: 25.00
TCDL: 7.00
BCLL: 0.00
BCDL: 10.00
Des Ld: 42.00
NCBCLL: 10.00
Soffit: 2.00
Load Duration: 1.15
Spacing: 24.0 "

Wind Criteria
Wind Std: ASCE 7-16
Speed: 115 mph
Enclosure: Closed
Risk Category: II
EXP: C Kzt: NA
Mean Height: 15.00 ft
TCDL: 4.0 psf
BCDL: 6.0 psf
MWFRS Parallel Dist: 0 to h/2
C&C Dist a: 3.00 ft
Loc. from endwall: Any
GCpi: 0.18
Wind Duration: 1.33

Snow Criteria (Pg,Pf in PSF)
Pg: 25.0 Ct: 1.1 CAT: II
Pf: 19.2 Ce: 1.0
Lu: - Cs: 1.00
Snow Duration: 1.15

Building Code:
IRC 2021
TPI Std: 2014
Rep Fac: Varies by Ld Case
FT/RT:20(0)/10(0)
Plate Type(s):
WAVE

Defl/CSI Criteria
PP Deflection in loc L/defl L/#
VERT(LL): NA
VERT(CL): NA
HORZ(LL): 0.002 B - -
HORZ(TL): 0.004 B - -
Creep Factor: 2.0
Max TC CSI: 0.208
Max BC CSI: 0.172
Max Web CSI: 0.057
Mfg Specified Camber:

VIEW Ver: 23.01.00A.0426.17

▲ Maximum Reactions (lbs)

	Gravity			Non-Gravity		
Loc	R+	/ R-	/ Rh	/ Rw	/ U	/ RL
B	335	/-	/-	/-	/24	/-
F	183	/-	/-	/-	/2	/-

Wind reactions based on MWFRS
B Brg Wid = 7.0 Min Req = 1.5 (Truss)
F Brg Wid = - Min Req = -
Bearing B is a rigid surface.

Maximum Top Chord Forces Per Ply (lbs)

Chords	Tens.	Comp.	Chords	Tens.	Comp.
A - B	36	- 6	C - D	0	- 1
B - C	23	- 72			

Maximum Bot Chord Forces Per Ply (lbs)

Chords	Tens.	Comp.	Chords	Tens.	Comp.
B - F	18	- 1	F - E	0	0

Maximum Web Forces Per Ply (lbs)

Webs	Tens.	Comp.
C - F	11	- 126

Lumber
Top chord: 2x4 :DF-L #1&Bet. + DF-L 1800f-1.6E:;
Bot chord: 2x4 :DF-L #1&Bet. + DF-L 1800f-1.6E:;
Webs: 2x4 DF-L(N) #1/#2;

Special Loads
------(Lumber Dur.Fac.=1.15 / Plate Dur.Fac.=1.15)

TC: From	-0 plf at	-1.89 to	65 plf at	0.00
TC: From	2 plf at	0.00 to	2 plf at	5.59
BC: From	0 plf at	-1.89 to	4 plf at	0.00
BC: From	2 plf at	0.00 to	2 plf at	5.53

TC: 61 lb Conc. Load at 2.79
BC: 69 lb Conc. Load at 2.79

Purlins
In lieu of structural panels or rigid ceiling use purlins to laterally brace chords as follows:

Chord	Spacing(in oc)	Start(ft)	End(ft)
TC	24	-1.89	5.59
BC	65	0.19	5.59

Apply purlins to any chords above or below fillers at 24" OC unless shown otherwise above.

Hangers / Ties
(J) Hanger Support Required, by others

Loading
Bottom chord checked for 10.00 psf non-concurrent live load.

Wind
Wind loads and reactions based on MWFRS.
Right end vertical not exposed to wind pressure.
Wind loading based on both gable and hip roof types.

****WARNING**** READ AND FOLLOW ALL NOTES ON THIS DRAWING!
****IMPORTANT**** FURNISH THIS DRAWING TO ALL CONTRACTORS INCLUDING THE INSTALLERS

Trusses require extreme care in fabricating, handling, shipping, installing and bracing. Refer to and follow the latest edition of BCSI (Building Component Safety Information, by TPI and SBCA) for safety practices prior to performing these functions. Installers shall provide temporary bracing per BCSI. Unless noted otherwise, top chord shall have properly attached structural sheathing and bottom chord shall have a properly attached rigid ceiling. Locations shown for permanent lateral restraint of webs shall have continuous lateral restraint (CLR), installed with diagonal bracing installed on the CLR per BCSI sections B3, B7, or B10, as applicable. Apply plates to each face of truss and position as shown above and on the Joint Details, unless noted otherwise. Refer to drawings 160A-Z for standard plate positions. Refer to job's General Notes page for additional information.
Alpine, a division of ITW Building Components Group Inc. shall not be responsible for any deviation from this drawing, any failure to build the truss in conformance with ANSI/TPI 1, or for handling, shipping, installation and bracing of trusses. A seal on this drawing or cover page listing this drawing, indicates acceptance of professional engineering responsibility solely for the design shown. The suitability and use of this drawing for any structure is the responsibility of the Building Designer per ANSI/TPI 1 Sec.2.
For more information see these web sites: Alpine: alpineitw.com; TPI: tpinst.org; SBCA: sbcacomponents.com; ICC: iccsafe.org; AWC: awc.org

SEQN: 22332 / T2 / COMN FROM: SP	Ply: 1 Qty: 6 Wgt: 123.2 lbs	**Job Number:** B26168 Zehr **Truss Label:** T-1	DRW: ... / ... 09/21/2023

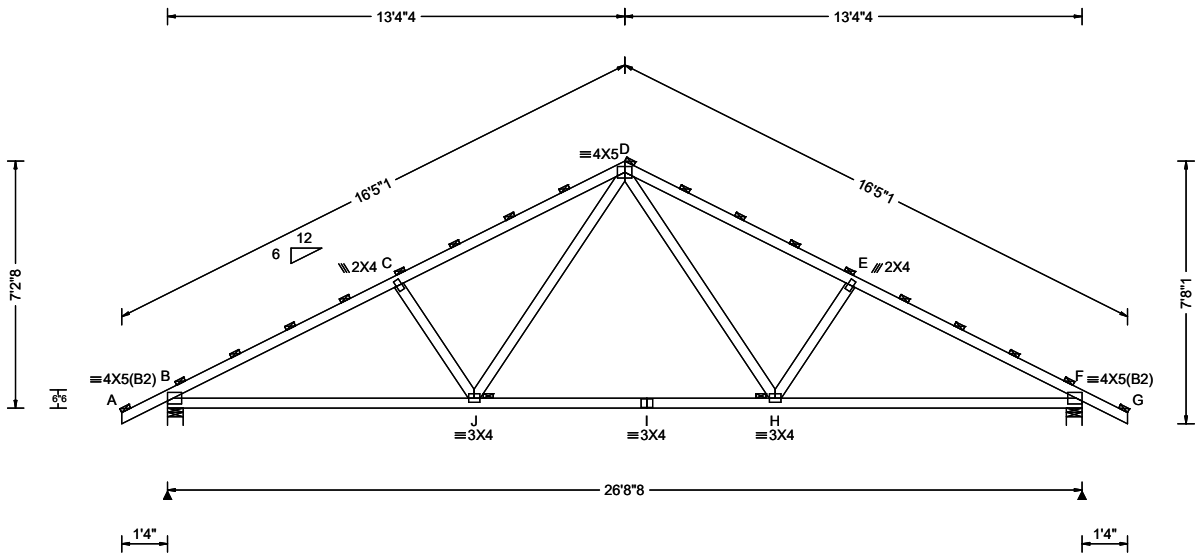

Loading Criteria (psf)

TCLL:	25.00
TCDL:	7.00
BCLL:	0.00
BCDL:	10.00
Des Ld:	42.00
NCBCLL:	10.00
Soffit:	2.00

Load Duration: 1.15
Spacing: 24.0 "

Wind Criteria
Wind Std: ASCE 7-16
Speed: 115 mph
Enclosure: Closed
Risk Category: II
EXP: C Kzt: NA
Mean Height: 15.00 ft
TCDL: 4.0 psf
BCDL: 6.0 psf
MWFRS Parallel Dist: 0 to h/2
C&C Dist a: 3.00 ft
Loc. from endwall: Any
GCpi: 0.18
Wind Duration: 1.33

Snow Criteria (Pg,Pf in PSF)
Pg: 25.0 Ct: 1.1 CAT: II
Pf: 19.2 Ce: 1.0
Lu: - Cs: 1.00
Snow Duration: 1.15

Building Code:
IRC 2021
TPI Std: 2014
Rep Fac: Yes
FT/RT:20(0)/10(0)
Plate Type(s):
WAVE

Defl/CSI Criteria

PP Deflection in	loc	L/defl	L/#
VERT(LL): 0.095	H	999	360
VERT(CL): 0.161	H	999	240
HORZ(LL): 0.042	F	-	-
HORZ(TL): 0.070	F	-	-

Creep Factor: 2.0
Max TC CSI: 0.523
Max BC CSI: 0.453
Max Web CSI: 0.135
Mfg Specified Camber:

VIEW Ver: 23.01.00A.0426.17

▲ Maximum Reactions (lbs)

Loc	Gravity R+	Gravity / R-	Gravity / Rh	Non-Gravity / Rw	Non-Gravity / U	Non-Gravity / RL
B	1237	/-	/-	/585	/106	/161
F	1237	/-	/-	/585	/106	/-

Wind reactions based on MWFRS
B Brg Wid = 5.5 Min Req = 1.5 (Truss)
F Brg Wid = 5.5 Min Req = 1.5 (Truss)
Bearings B & F are a rigid surface.

Maximum Top Chord Forces Per Ply (lbs)

Chords	Tens.	Comp.	Chords	Tens.	Comp.
A - B	42	0	D - E	522	- 1674
B - C	521	- 1905	E - F	520	- 1905
C - D	523	- 1674	F - G	42	0

Maximum Bot Chord Forces Per Ply (lbs)

Chords	Tens.	Comp.	Chords	Tens.	Comp.
B - J	1611	- 374	I - H	1103	- 163
J - I	1103	- 163	H - F	1612	- 355

Maximum Web Forces Per Ply (lbs)

Webs	Tens.	Comp.	Webs	Tens.	Comp.
C - J	264	- 382	D - H	579	- 129
J - D	579	- 128	H - E	265	- 382

Lumber

Top chord: 2x4 :DF-L #1&Bet. + DF-L 1800f-1.6E:;
Bot chord: 2x4 :DF-L #1&Bet. + DF-L 1800f-1.6E:;
Webs: 2x4 DF-L(N) #1/#2;

Purlins

In lieu of structural panels or rigid ceiling use purlins to laterally brace chords as follows:

Chord	Spacing(in oc)	Start(ft)	End(ft)
TC	24	-1.33	13.35
TC	24	13.35	28.04
BC	120	0.17	26.54

Apply purlins to any chords above or below fillers at 24" OC unless shown otherwise above.

Loading

Bottom chord checked for 10.00 psf non-concurrent live load.

Truss designed for unbalanced snow loads.

Wind

Wind loads based on MWFRS with additional C&C member design.

Wind loading based on both gable and hip roof types.

****WARNING**** READ AND FOLLOW ALL NOTES ON THIS DRAWING!
****IMPORTANT**** FURNISH THIS DRAWING TO ALL CONTRACTORS INCLUDING THE INSTALLERS

Trusses require extreme care in fabricating, handling, shipping, installing and bracing. Refer to and follow the latest edition of BCSI (Building Component Safety Information, by TPI and SBCA) for safety practices prior to performing these functions. Installers shall provide temporary bracing per BCSI. Unless noted otherwise, top chord shall have properly attached structural sheathing and bottom chord shall have a properly attached rigid ceiling. Locations shown for permanent lateral restraint of webs shall have continuous lateral restraint (CLR), installed with diagonal bracing installed on the CLR per BCSI sections B3, B7, or B10, as applicable. Apply plates to each face of truss and position as shown above and on the Joint Details, unless noted otherwise. Refer to drawings 160A-Z for standard plate positions. Refer to job's General Notes page for additional information.

Alpine, a division of ITW Building Components Group Inc. shall not be responsible for any deviation from this drawing, any failure to build the truss in conformance with ANSI/TPI 1, or for handling, shipping, installation and bracing of trusses. A seal on this drawing or cover page listing this drawing, indicates acceptance of professional engineering responsibility solely for the design shown. The suitability and use of this drawing for any structure is the responsibility of the Building Designer per ANSI/TPI 1 Sec.2.

For more information see these web sites: Alpine: alpineitw.com; TPI: tpinst.org; SBCA: sbcacomponents.com; ICC: iccsafe.org; AWC: awc.org

SEQN: 22386 / T1 / HIPS FROM: SP	Ply: 2 Qty: 1 Wgt: 425.6 lbs	**Job Number:** B26168 Zehr **Truss Label:** T-1G	DRW: ... / ... 09/21/2023

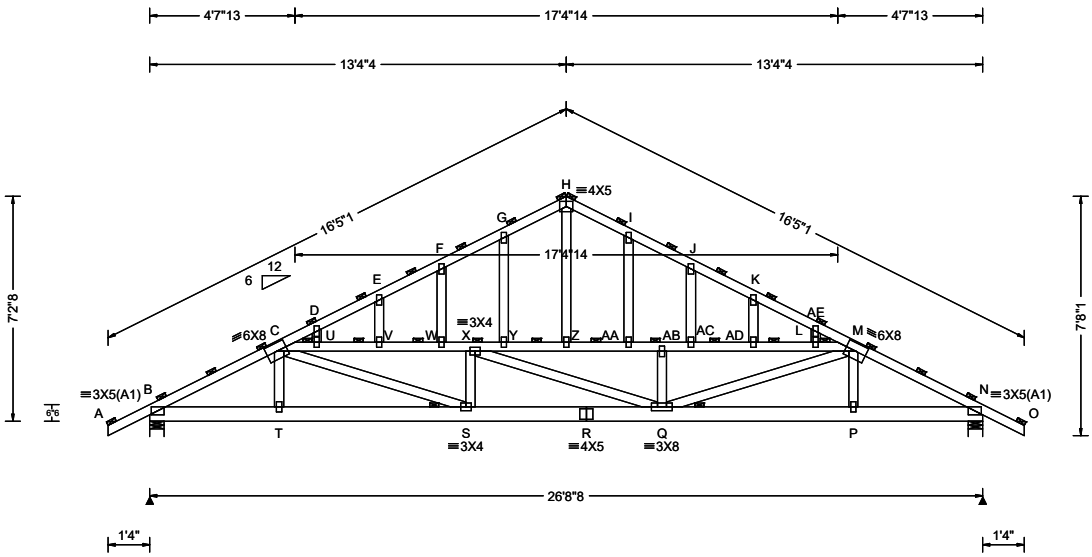

Loading Criteria (psf)

TCLL: 25.00
TCDL: 7.00
BCLL: 0.00
BCDL: 10.00
Des Ld: 42.00
NCBCLL: 0.00
Soffit: 2.00
Load Duration: 1.15
Spacing: 24.0 "

Wind Criteria

Wind Std: ASCE 7-16
Speed: 115 mph
Enclosure: Closed
Risk Category: II
EXP: C Kzt: NA
Mean Height: 15.00 ft
TCDL: 4.0 psf
BCDL: 6.0 psf
MWFRS Parallel Dist: 0 to h/2
C&C Dist a: 3.00 ft
Loc. from endwall: Any
GCpi: 0.18
Wind Duration: 1.33

Snow Criteria (Pg,Pf in PSF)

Pg: 25.0 Ct: 1.1 CAT: II
Pf: 19.2 Ce: 1.0
Lu: - Cs: 1.00
Snow Duration: 1.15

Building Code:
IRC 2021
TPI Std: 2014
Rep Fac: Varies by Ld Case
FT/RT:20(0)/10(0)
Plate Type(s):
WAVE

Defl/CSI Criteria

PP Deflection in	loc	L/defl	L/#
VERT(LL): 0.126	AC	999	360
VERT(CL): 0.212	AC	999	240
HORZ(LL): 0.053	F	-	-
HORZ(TL): 0.090	F	-	-

Creep Factor: 2.0
Max TC CSI: 0.453
Max BC CSI: 0.202
Max Web CSI: 0.140
Mfg Specified Camber:

VIEW Ver: 23.01.00A.0426.17

▲ Maximum Reactions (lbs)

Loc	Gravity R+	Gravity / R-	Gravity / Rh	Non-Gravity / Rw	Non-Gravity / U	Non-Gravity / RL
B	1862	/-	/-	/-	/228	/-
N	1862	/-	/-	/-	/228	/-

Wind reactions based on MWFRS
B Brg Wid = 5.5 Min Req = 1.5 (Truss)
N Brg Wid = 5.5 Min Req = 1.5 (Truss)
Bearings B & N are a rigid surface.

Maximum Top Chord Forces Per Ply (lbs)

Chords	Tens.	Comp.	Chords	Tens.	Comp.
A - B	21	- 6	H - I	55	- 398
B - C	195	- 1619	I - J	52	- 376
C - D	60	- 417	J - K	55	- 405
D - E	57	- 408	K - L	57	- 408
E - F	55	- 405	L - M	60	- 417
F - G	52	- 378	M - N	195	- 1624
G - H	55	- 397	N - O	21	- 6

Maximum Bot Chord Forces Per Ply (lbs)

Chords	Tens.	Comp.	Chords	Tens.	Comp.
B - T	1420	- 167	R - Q	2016	- 253
T - S	1433	- 167	Q - P	1438	- 167
S - R	2016	- 253	P - N	1424	- 168

Maximum Web Forces Per Ply (lbs)

Webs	Tens.	Comp.	Webs	Tens.	Comp.
C - T	191	0	H - Z	319	- 41
C - U	206	- 1680	Z -AA	206	- 1677
C - S	633	- 91	AA- I	17	- 93
D - U	3	- 8	AA-AB	206	- 1676
U - V	206	- 1680	Q - M	621	- 91
E - V	6	- 32	AB- Q	109	- 72
V - W	206	- 1681	AB-AC	206	- 1676
F - W	29	- 40	AC- J	33	- 42
W - X	206	- 1681	AC-AD	206	- 1677
S - X	109	- 61	AD- K	6	- 32
X - Y	206	- 1676	AD-AE	206	- 1675
X - Q	159	- 162	AE- L	6	- 8
G - Y	17	- 95	AE- M	206	- 1676
Y - Z	206	- 1677	P - M	201	0

Lumber

Top chord: 2x4 :DF-L #1&Bet. + DF-L 1800f-1.6E:;
Bot chord: 2x6 DF-L 2400f-2.0E;
Webs: 2x4 DF-L(N) #1/#2;

Nailnote

Nail Schedule:0.128"x3", min. nails
Top Chord: 1 Row @12.00" o.c.
Bot Chord: 1 Row @12.00" o.c.
Webs : 1 Row @ 4" o.c.
Use equal spacing between rows and stagger nails in each row to avoid splitting.

Special Loads

------(Lumber Dur.Fac.=1.15 / Plate Dur.Fac.=1.15)

TC: From	66 plf at	-1.33 to	66 plf at	4.03
TC: From	33 plf at	4.03 to	33 plf at	22.68
TC: From	66 plf at	22.68 to	66 plf at	28.04
BC: From	4 plf at	-1.33 to	4 plf at	0.00
BC: From	20 plf at	0.00 to	20 plf at	4.03
BC: From	10 plf at	4.03 to	10 plf at	22.68
BC: From	20 plf at	22.68 to	20 plf at	26.71
BC: From	4 plf at	26.71 to	4 plf at	28.04

BC: 336 lb Conc. Load at 4.03,22.68
BC: 153 lb Conc. Load at 6.06, 8.06,10.06,12.06 13.35,14.65,16.65,18.65,20.65

Plating Notes

All plates are 2X4 except as noted.

Wind

Wind loads and reactions based on MWFRS.

Wind loading based on both gable and hip roof types.

Purlins

In lieu of structural panels or rigid ceiling use purlins to laterally brace chords as follows:

Chord	Spacing(in oc)	Start(ft)	End(ft)
TC	24	-1.33	13.35
TC	24	4.00	22.70
TC	24	13.35	28.04
BC	120	0.15	26.56

Apply purlins to any chords above or below fillers at 24" OC unless shown otherwise above.

****WARNING**** READ AND FOLLOW ALL NOTES ON THIS DRAWING!
****IMPORTANT**** FURNISH THIS DRAWING TO ALL CONTRACTORS INCLUDING THE INSTALLERS

Trusses require extreme care in fabricating, handling, shipping, installing and bracing. Refer to and follow the latest edition of BCSI (Building Component Safety Information, by TPI and SBCA) for safety practices prior to performing these functions. Installers shall provide temporary bracing per BCSI. Unless noted otherwise, top chord shall have properly attached structural sheathing and bottom chord shall have a properly attached rigid ceiling. Locations shown for permanent lateral restraint of webs shall have continuous lateral restraint (CLR), installed with diagonal bracing installed on the CLR per BCSI sections B3, B7, or B10, as applicable. Apply plates to each face of truss and position as shown above and on the Joint Details, unless noted otherwise. Refer to drawings 160A-Z for standard plate positions. Refer to job's General Notes page for additional information.

Alpine, a division of ITW Building Components Group Inc. shall not be responsible for any deviation from this drawing, any failure to build the truss in conformance with ANSI/TPI 1, or for handling, shipping, installation and bracing of trusses. A seal on this drawing or cover page listing this drawing, indicates acceptance of professional engineering responsibility solely for the design shown. The suitability and use of this drawing for any structure is the responsibility of the Building Designer per ANSI/TPI 1 Sec.2.

For more information see these web sites: Alpine: alpineitw.com; TPI: tpinst.org; SBCA: sbcacomponents.com; ICC: iccsafe.org; AWC: awc.org

SEQN: 22330 / T9 / COMN FROM: SP	Ply: 1 Qty: 2 Wgt: 120.4 lbs	**Job Number:** B26168 Zehr **Truss Label:** T-2	DRW: ... / ... 09/21/2023

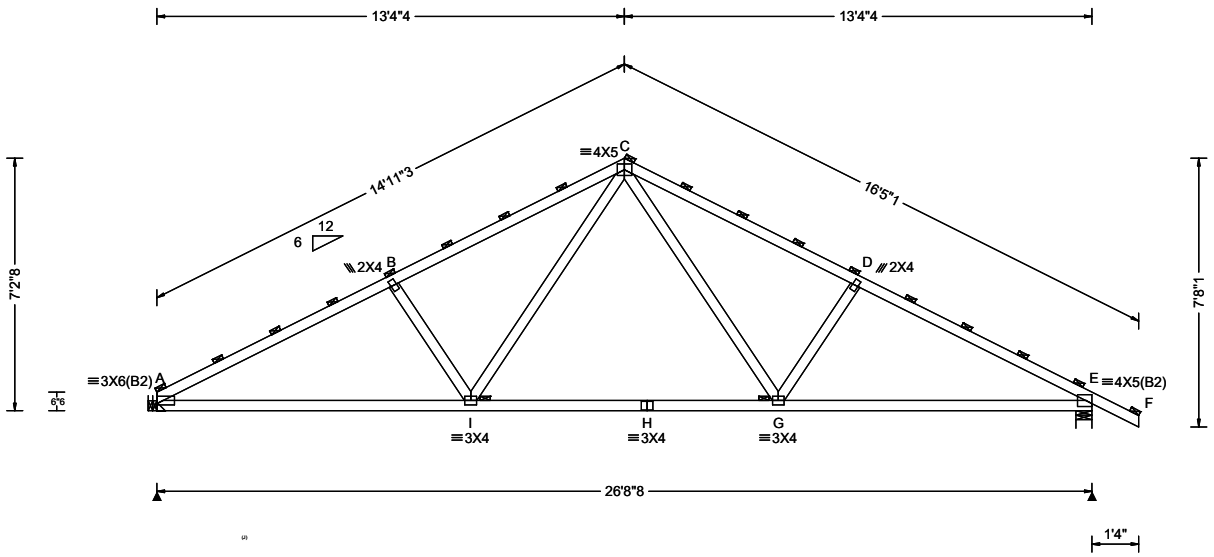

Loading Criteria (psf)

TCLL:	25.00
TCDL:	7.00
BCLL:	0.00
BCDL:	10.00
Des Ld:	42.00
NCBCLL:	10.00
Soffit:	2.00

Load Duration: 1.15
Spacing: 24.0 "

Wind Criteria
Wind Std: ASCE 7-16
Speed: 115 mph
Enclosure: Closed
Risk Category: II
EXP: C Kzt: NA
Mean Height: 15.00 ft
TCDL: 4.0 psf
BCDL: 6.0 psf
MWFRS Parallel Dist: 0 to h/2
C&C Dist a: 3.00 ft
Loc. from endwall: Any
GCpi: 0.18
Wind Duration: 1.33

Snow Criteria (Pg,Pf in PSF)
Pg: 25.0 Ct: 1.1 CAT: II
Pf: 19.2 Ce: 1.0
Lu: - Cs: 1.00
Snow Duration: 1.15

Building Code:
IRC 2021
TPI Std: 2014
Rep Fac: Yes
FT/RT:20(0)/10(0)
Plate Type(s):
WAVE

Defl/CSI Criteria

PP Deflection in	loc	L/defl	L/#
VERT(LL): 0.093	G	999	360
VERT(CL): 0.159	G	999	240
HORZ(LL): 0.041	E	-	-
HORZ(TL): 0.069	E	-	-

Creep Factor: 2.0
Max TC CSI: 0.525
Max BC CSI: 0.456
Max Web CSI: 0.142
Mfg Specified Camber:

VIEW Ver: 23.01.00A.0426.17

▲ Maximum Reactions (lbs)

Loc	Gravity R+	Gravity / R-	/ Rh	Non-Gravity / Rw	/ U	/ RL
A	1141	/-	/-	/529	/88	/151
E	1240	/-	/-	/585	/107	/-

Wind reactions based on MWFRS
A Brg Wid = - Min Req = -
E Brg Wid = 5.5 Min Req = 1.5 (Truss)
Bearing E is a rigid surface.

Maximum Top Chord Forces Per Ply (lbs)

Chords	Tens.	Comp.	Chords	Tens.	Comp.
A - B	531	- 1921	D - E	523	- 1910
B - C	532	- 1689	E - F	42	0
C - D	525	- 1679			

Maximum Bot Chord Forces Per Ply (lbs)

Chords	Tens.	Comp.	Chords	Tens.	Comp.
A - I	1630	- 382	H - G	1108	- 165
I - H	1108	- 165	G - E	1616	- 358

Maximum Web Forces Per Ply (lbs)

Webs	Tens.	Comp.	Webs	Tens.	Comp.
B - I	269	- 391	C - G	578	- 128
I - C	591	- 135	G - D	265	- 383

Lumber

Top chord: 2x4 :DF-L #1&Bet. + DF-L 1800f-1.6E:;
Bot chord: 2x4 :DF-L #1&Bet. + DF-L 1800f-1.6E:;
Webs: 2x4 DF-L(N) #1/#2;

Purlins

In lieu of structural panels or rigid ceiling use purlins to laterally brace chords as follows:

Chord	Spacing(in oc)	Start(ft)	End(ft)
TC	24	0.10	13.35
TC	24	13.35	28.04
BC	120	0.17	26.54

Apply purlins to any chords above or below fillers at 24" OC unless shown otherwise above.

Hangers / Ties

(J) Hanger Support Required, by others

Loading

Bottom chord checked for 10.00 psf non-concurrent live load.

Truss designed for unbalanced snow loads.

Wind

Wind loads based on MWFRS with additional C&C member design.

Wind loading based on both gable and hip roof types.

****WARNING**** READ AND FOLLOW ALL NOTES ON THIS DRAWING!
****IMPORTANT**** FURNISH THIS DRAWING TO ALL CONTRACTORS INCLUDING THE INSTALLERS
Trusses require extreme care in fabricating, handling, shipping, installing and bracing. Refer to and follow the latest edition of BCSI (Building Component Safety Information, by TPI and SBCA) for safety practices prior to performing these functions. Installers shall provide temporary bracing per BCSI. Unless noted otherwise, top chord shall have properly attached structural sheathing and bottom chord shall have a properly attached rigid ceiling. Locations shown for permanent lateral restraint of webs shall have continuous lateral restraint (CLR), installed with diagonal bracing installed on the CLR per BCSI sections B3, B7, or B10, as applicable. Apply plates to each face of truss and position as shown above and on the Joint Details, unless noted otherwise. Refer to drawings 160A-Z for standard plate positions. Refer to job's General Notes page for additional information.
Alpine, a division of ITW Building Components Group Inc. shall not be responsible for any deviation from this drawing, any failure to build the truss in conformance with ANSI/TPI 1, or for handling, shipping, installation and bracing of trusses. A seal on this drawing or cover page listing this drawing, indicates acceptance of professional engineering responsibility solely for the design shown. The suitability and use of this drawing for any structure is the responsibility of the Building Designer per ANSI/TPI 1 Sec.2.
For more information see these web sites: Alpine: alpineitw.com; TPI: tpinst.org; SBCA: sbcacomponents.com; ICC: iccsafe.org; AWC: awc.org

SEQN: 22327 / T11 / COMN FROM: SP	Ply: 1 Qty: 10 Wgt: 186.2 lbs	**Job Number:** B26168 Zehr **Truss Label:** T-3	DRW: ... / ... 09/21/2023

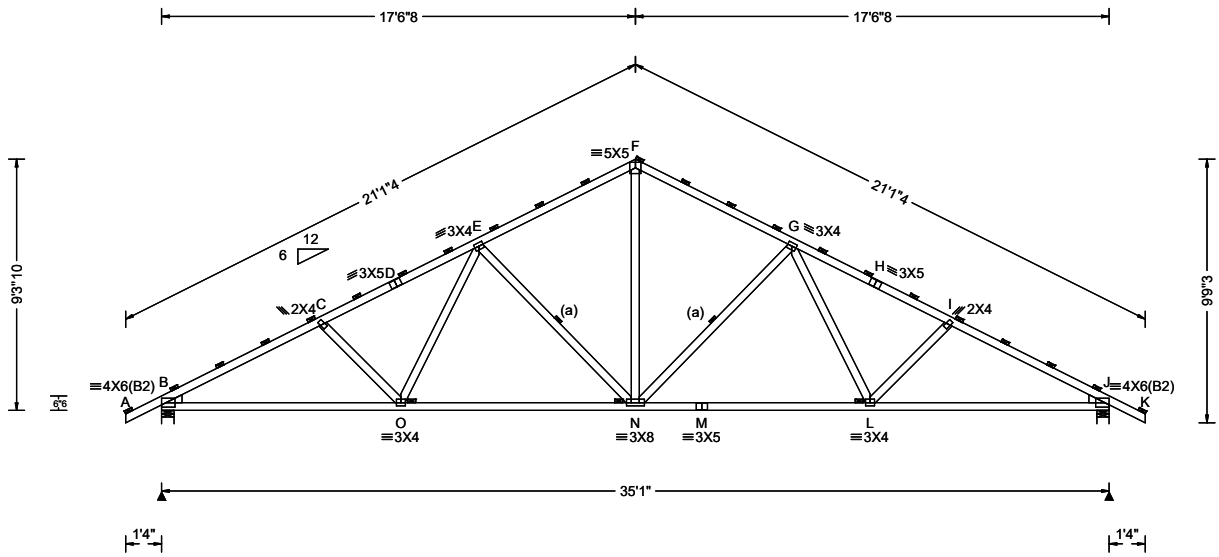

Loading Criteria (psf)

TCLL:	25.00
TCDL:	7.00
BCLL:	0.00
BCDL:	10.00
Des Ld:	42.00
NCBCLL:	10.00
Soffit:	2.00

Load Duration: 1.15
Spacing: 24.0 "

Wind Criteria
Wind Std: ASCE 7-16
Speed: 115 mph
Enclosure: Closed
Risk Category: II
EXP: C Kzt: NA
Mean Height: 15.00 ft
TCDL: 4.0 psf
BCDL: 6.0 psf
MWFRS Parallel Dist: 0 to h/2
C&C Dist a: 3.51 ft
Loc. from endwall: Any
GCpi: 0.18
Wind Duration: 1.33

Snow Criteria (Pg,Pf in PSF)
Pg: 25.0 Ct: 1.1 CAT: II
Pf: 19.2 Ce: 1.0
Lu: - Cs: 1.00
Snow Duration: 1.15

Building Code:
IRC 2021
TPI Std: 2014
Rep Fac: Yes
FT/RT:20(0)/10(0)
Plate Type(s):
WAVE

Defl/CSI Criteria

PP Deflection in	loc	L/defl	L/#
VERT(LL): 0.177	N	999	360
VERT(CL): 0.300	N	999	240
HORZ(LL): 0.080	J	-	-
HORZ(TL): 0.136	J	-	-

Creep Factor: 2.0
Max TC CSI: 0.632
Max BC CSI: 0.656
Max Web CSI: 0.361
Mfg Specified Camber:

VIEW Ver: 23.01.00A.0426.17

▲ Maximum Reactions (lbs)

Loc	Gravity R+	Gravity / R-	Gravity / Rh	Non-Gravity / Rw	Non-Gravity / U	Non-Gravity / RL
B	1596	/-	/-	/760	/135	/208
J	1596	/-	/-	/760	/135	/-

Wind reactions based on MWFRS
B Brg Wid = 5.5 Min Req = 1.7 (Truss)
J Brg Wid = 5.5 Min Req = 1.7 (Truss)
Bearings B & J are a rigid surface.

Maximum Top Chord Forces Per Ply (lbs)

Chords	Tens.	Comp.	Chords	Tens.	Comp.
A - B	42	0	F - G	596	- 1742
B - C	708	- 2655	G - H	671	- 2322
C - D	660	- 2403	H - I	659	- 2403
D - E	672	- 2322	I - J	707	- 2655
E - F	596	- 1742	J - K	42	0

Maximum Bot Chord Forces Per Ply (lbs)

Chords	Tens.	Comp.	Chords	Tens.	Comp.
B - O	2278	- 539	M - L	1919	- 369
O - N	1919	- 389	L - J	2278	- 524
N - M	1919	- 369			

Maximum Web Forces Per Ply (lbs)

Webs	Tens.	Comp.	Webs	Tens.	Comp.
C - O	208	- 288	N - G	279	- 635
O - E	423	- 31	G - L	423	- 30
E - N	279	- 635	L - I	208	- 288
F - N	1109	- 288			

Lumber

Top chord: 2x4 :DF-L #1&Bet. + DF-L 1800f-1.6E:;
Bot chord: 2x4 :DF-L #1&Bet. + DF-L 1800f-1.6E:;
Webs: 2x4 DF-L(N) #1/#2;
Lt Wedge: 2x4 DF-L(N) #1/#2;
Rt Wedge: 2x4 DF-L(N) #1/#2;

Bracing

(a) Continuous lateral restraint equally spaced on member.

Purlins

In lieu of structural panels or rigid ceiling use purlins to laterally brace chords as follows:

Chord	Spacing(in oc)	Start(ft)	End(ft)
TC	24	-1.33	17.54
TC	24	17.54	36.42
BC	120	0.17	34.91

Apply purlins to any chords above or below fillers at 24" OC unless shown otherwise above.

Loading

Bottom chord checked for 10.00 psf non-concurrent live load.

Truss designed for unbalanced snow loads.

Wind

Wind loads based on MWFRS with additional C&C member design.

Wind loading based on both gable and hip roof types.

****WARNING**** READ AND FOLLOW ALL NOTES ON THIS DRAWING!
****IMPORTANT**** FURNISH THIS DRAWING TO ALL CONTRACTORS INCLUDING THE INSTALLERS

Trusses require extreme care in fabricating, handling, shipping, installing and bracing. Refer to and follow the latest edition of BCSI (Building Component Safety Information, by TPI and SBCA) for safety practices prior to performing these functions. Installers shall provide temporary bracing per BCSI. Unless noted otherwise, top chord shall have properly attached structural sheathing and bottom chord shall have a properly attached rigid ceiling. Locations shown for permanent lateral restraint of webs shall have continuous lateral restraint (CLR), installed with diagonal bracing installed on the CLR per BCSI sections B3, B7, or B10, as applicable. Apply plates to each face of truss and position as shown above and on the Joint Details, unless noted otherwise. Refer to drawings 160A-Z for standard plate positions. Refer to job's General Notes page for additional information.

Alpine, a division of ITW Building Components Group Inc. shall not be responsible for any deviation from this drawing, any failure to build the truss in conformance with ANSI/TPI 1, or for handling, shipping, installation and bracing of trusses. A seal on this drawing or cover page listing this drawing, indicates acceptance of professional engineering responsibility solely for the design shown. The suitability and use of this drawing for any structure is the responsibility of the Building Designer per ANSI/TPI 1 Sec.2.

For more information see these web sites: Alpine: alpineitw.com; TPI: tpinst.org; SBCA: sbcacomponents.com; ICC: iccsafe.org; AWC: awc.org

SEQN: 22388 / T14 / MONO	Ply: 2	**Job Number:** B26168	DRW:
FROM: SP	Qty: 1	Zehr	... / ... 09/21/2023
Page 1 of 2	Wgt: 596.4 lbs	**Truss Label:** T-3G	

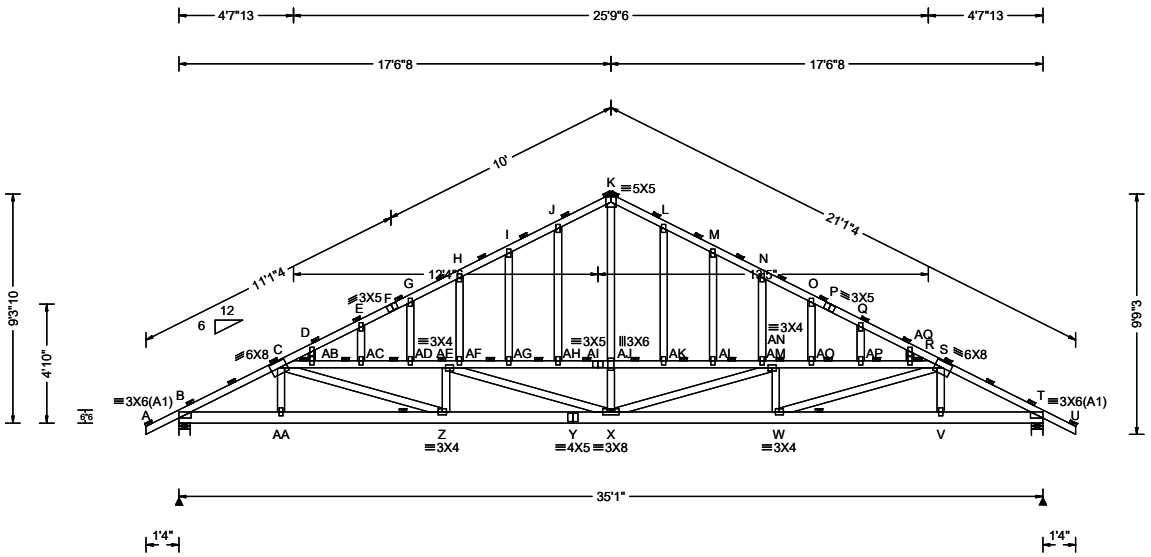

Loading Criteria (psf)

TCLL: 25.00
TCDL: 7.00
BCLL: 0.00
BCDL: 10.00
Des Ld: 42.00
NCBCLL: 0.00
Soffit: 2.00
Load Duration: 1.15
Spacing: 24.0 "

Wind Criteria

Wind Std: ASCE 7-16
Speed: 115 mph
Enclosure: Closed
Risk Category: II
EXP: C Kzt: NA
Mean Height: 15.00 ft
TCDL: 4.0 psf
BCDL: 6.0 psf
MWFRS Parallel Dist: 0 to h/2
C&C Dist a: 3.51 ft
Loc. from endwall: Any
GCpi: 0.18
Wind Duration: 1.33

Snow Criteria (Pg,Pf in PSF)

Pg: 25.0 Ct: 1.1 CAT: II
Pf: 19.2 Ce: 1.0
Lu: - Cs: 1.00
Snow Duration: 1.15

Building Code:
IRC 2021
TPI Std: 2014
Rep Fac: Varies by Ld Case
FT/RT:20(0)/10(0)
Plate Type(s):
WAVE

Defl/CSI Criteria

PP Deflection in	loc	L/defl	L/#
VERT(LL): 0.110	AD	999	360
VERT(CL): 0.184	AD	999	240
HORZ(LL): 0.039	G	-	-
HORZ(TL): 0.065	G	-	-

Creep Factor: 2.0
Max TC CSI: 0.236
Max BC CSI: 0.239
Max Web CSI: 0.298
Mfg Specified Camber:

VIEW Ver: 23.01.00A.0426.17

▲ Maximum Reactions (lbs)

Loc	Gravity R+	/ R-	/ Rh	Non-Gravity / Rw	/ U	/ RL
B	2347	/-	/-	/-	/294	/-
T	2347	/-	/-	/-	/294	/-

Wind reactions based on MWFRS
B Brg Wid = 5.5 Min Req = 1.5 (Truss)
T Brg Wid = 5.5 Min Req = 1.5 (Truss)
Bearings B & T are a rigid surface.

Maximum Top Chord Forces Per Ply (lbs)

Chords	Tens.	Comp.	Chords	Tens.	Comp.
A - B	21	- 6	K - L	162	- 1224
B - C	259	- 2092	L - M	164	- 1236
C - D	168	- 1246	M - N	166	- 1242
D - E	166	- 1243	N - O	163	- 1232
E - F	164	- 1234	O - P	161	- 1224
F - G	161	- 1224	P - Q	164	- 1234
G - H	163	- 1232	Q - R	166	- 1243
H - I	166	- 1242	R - S	168	- 1246
I - J	164	- 1236	S - T	259	- 2092
J - K	162	- 1224	T - U	21	- 6

Maximum Bot Chord Forces Per Ply (lbs)

Chords	Tens.	Comp.	Chords	Tens.	Comp.
B -AA	1835	- 224	X - W	2111	- 273
AA- Z	1847	- 223	W - V	1847	- 223
Z - Y	2111	- 273	V - T	1835	- 224
Y - X	2111	- 273			

Maximum Web Forces Per Ply (lbs)

Webs	Tens.	Comp.	Webs	Tens.	Comp.
C -AA	192	- 4	X -AN	123	- 957
C -AB	128	- 1034	AJ- X	973	- 113
C - Z	304	- 53	AJ-AK	12	- 103
D -AB	2	- 19	AK- L	4	- 31
AB-AC	128	- 1035	AK-AL	12	- 103
E -AC	5	- 30	AL- M	4	- 27
AC-AD	129	- 1036	AL-AM	12	- 103
G -AD	8	- 49	AM- N	18	- 109
AD-AE	129	- 1037	AM-AN	11	- 101
Z -AE	198	- 22	AN- W	198	- 22
AE-AF	11	- 101	AN-AO	129	- 1037
AE- X	123	- 957	W - S	304	- 53
H -AF	18	- 109	AO- O	8	- 49
AF-AG	12	- 103	AO-AP	129	- 1036

Lumber

Top chord: 2x4 :DF-L #1&Bet. + DF-L 1800f-1.6E:;
Bot chord: 2x6 DF-L 2400f-2.0E;
Webs: 2x4 DF-L(N) #1/#2;

Nailnote

Nail Schedule:0.128"x3", min. nails
Top Chord: 1 Row @12.00" o.c.
Bot Chord: 1 Row @12.00" o.c.
Webs : 1 Row @ 4" o.c.
Use equal spacing between rows and stagger nails in each row to avoid splitting.

Special Loads

------(Lumber Dur.Fac.=1.15 / Plate Dur.Fac.=1.15)

TC: From	66 plf at	-1.33 to	66 plf at	4.03
TC: From	33 plf at	4.03 to	33 plf at	31.05
TC: From	66 plf at	31.05 to	66 plf at	36.42
BC: From	4 plf at	-1.33 to	4 plf at	0.00
BC: From	20 plf at	0.00 to	20 plf at	4.03
BC: From	10 plf at	4.03 to	10 plf at	31.05
BC: From	20 plf at	31.05 to	20 plf at	35.08
BC: From	4 plf at	35.08 to	4 plf at	36.42

BC: 336 lb Conc. Load at 4.03,31.05
BC: 153 lb Conc. Load at 6.06, 8.06,10.06,12.06 14.06,16.06,17.54,19.02,21.02,23.02,25.02,27.02 29.02

Plating Notes

All plates are 2X4 except as noted.

Wind

Wind loads and reactions based on MWFRS.

Wind loading based on both gable and hip roof types.

Purlins

In lieu of structural panels or rigid ceiling use purlins to laterally brace chords as follows:

Chord	Spacing(in oc)	Start(ft)	End(ft)
TC	24	-1.33	17.54
TC	24	4.00	31.08
TC	24	17.54	36.42
BC	120	0.15	34.94

Apply purlins to any chords above or below fillers at 24" OC unless shown otherwise above.

****WARNING**** READ AND FOLLOW ALL NOTES ON THIS DRAWING!
****IMPORTANT**** FURNISH THIS DRAWING TO ALL CONTRACTORS INCLUDING THE INSTALLERS

Trusses require extreme care in fabricating, handling, shipping, installing and bracing. Refer to and follow the latest edition of BCSI (Building Component Safety Information, by TPI and SBCA) for safety practices prior to performing these functions. Installers shall provide temporary bracing per BCSI. Unless noted otherwise, top chord shall have properly attached structural sheathing and bottom chord shall have a properly attached rigid ceiling. Locations shown for permanent lateral restraint of webs shall have continuous lateral restraint (CLR), installed with diagonal bracing installed on the CLR per BCSI sections B3, B7, or B10, as applicable. Apply plates to each face of truss and position as shown above and on the Joint Details, unless noted otherwise. Refer to drawings 160A-Z for standard plate positions. Refer to job's General Notes page for additional information.

Alpine, a division of ITW Building Components Group Inc. shall not be responsible for any deviation from this drawing, any failure to build the truss in conformance with ANSI/TPI 1, or for handling, shipping, installation and bracing of trusses. A seal on this drawing or cover page listing this drawing, indicates acceptance of professional engineering responsibility solely for the design shown. The suitability and use of this drawing for any structure is the responsibility of the Building Designer per ANSI/TPI 1 Sec.2.

For more information see these web sites: Alpine: alpineitw.com; TPI: tpinst.org; SBCA: sbcacomponents.com; ICC: iccsafe.org; AWC: awc.org

I -AG	4	- 27	AP- Q	5	- 30
AG-AH	12	- 103	AP-AQ	129	- 1035
J -AH	4	- 31	AQ- R	3	- 19
AH-AI	12	- 103	AQ- S	128	- 1034
AI-AJ	12	- 103	V - S	192	- 5
K -AJ	1007	- 124			

****WARNING**** READ AND FOLLOW ALL NOTES ON THIS DRAWING!

****IMPORTANT**** FURNISH THIS DRAWING TO ALL CONTRACTORS INCLUDING THE INSTALLERS

Trusses require extreme care in fabricating, handling, shipping, installing and bracing. Refer to and follow the latest edition of BCSI (Building Component Safety Information, by TPI and SBCA) for safety practices prior to performing these functions. Installers shall provide temporary bracing per BCSI. Unless noted otherwise, top chord shall have properly attached structural sheathing and bottom chord shall have a properly attached rigid ceiling. Locations shown for permanent lateral restraint of webs shall have continuous lateral restraint (CLR), installed with diagonal bracing installed on the CLR per BCSI sections B3, B7, or B10, as applicable. Apply plates to each face of truss and position as shown above and on the Joint Details, unless noted otherwise. Refer to drawings 160A-Z for standard plate positions. Refer to job's General Notes page for additional information.

Alpine, a division of ITW Building Components Group Inc. shall not be responsible for any deviation from this drawing, any failure to build the truss in conformance with ANSI/TPI 1, or for handling, shipping, installation and bracing of trusses. A seal on this drawing or cover page listing this drawing, indicates acceptance of professional engineering responsibility solely for the design shown. The suitability and use of this drawing for any structure is the responsibility of the Building Designer per ANSI/TPI 1 Sec.2.

For more information see these web sites: Alpine: alpineitw.com; TPI: tpinst.org; SBCA: sbcacomponents.com; ICC: iccsafe.org; AWC: awc.org

SEQN: 22390 / T8 / MONO	Ply: 2	**Job Number:** B26168	DRW:
FROM: SP	Qty: 1	Zehr	... / ... 09/21/2023
Page 1 of 2	Wgt: 596.4 lbs	**Truss Label:** T-3G	

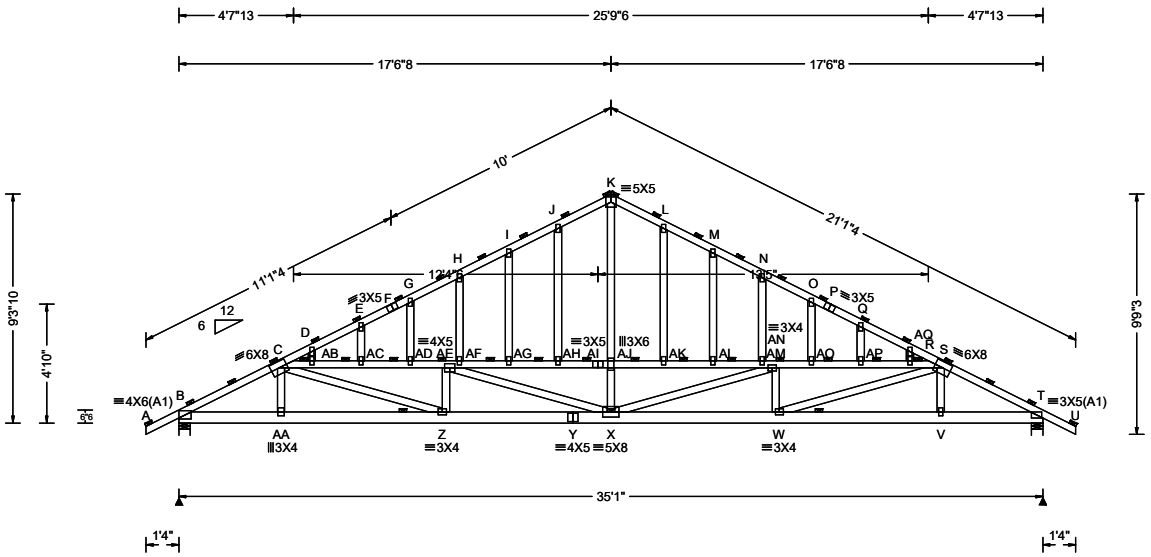

Loading Criteria (psf)

TCLL: 25.00
TCDL: 7.00
BCLL: 0.00
BCDL: 10.00
Des Ld: 42.00
NCBCLL: 0.00
Soffit: 2.00
Load Duration: 1.15
Spacing: 24.0 "

Wind Criteria

Wind Std: ASCE 7-16
Speed: 115 mph
Enclosure: Closed
Risk Category: II
EXP: C Kzt: NA
Mean Height: 15.00 ft
TCDL: 4.0 psf
BCDL: 6.0 psf
MWFRS Parallel Dist: 0 to h/2
C&C Dist a: 3.51 ft
Loc. from endwall: Any
GCpi: 0.18
Wind Duration: 1.33

Snow Criteria (Pg,Pf in PSF)

Pg: 25.0 Ct: 1.1 CAT: II
Pf: 19.2 Ce: 1.0
Lu: - Cs: 1.00
Snow Duration: 1.15

Building Code:
IRC 2021
TPI Std: 2014
Rep Fac: Varies by Ld Case
FT/RT:20(0)/10(0)
Plate Type(s):
WAVE

Defl/CSI Criteria

PP Deflection in	loc	L/defl	L/#
VERT(LL): 0.137	AD	999	360
VERT(CL): 0.231	AD	999	240
HORZ(LL): 0.050	G	-	-
HORZ(TL): 0.084	G	-	-

Creep Factor: 2.0
Max TC CSI: 0.429
Max BC CSI: 0.562
Max Web CSI: 0.559
Mfg Specified Camber:

VIEW Ver: 23.01.00A.0426.17

▲ Maximum Reactions (lbs)

Loc	Gravity R+	/ R-	/ Rh	Non-Gravity / Rw	/ U	/ RL
B	2819	/-	/-	/-	/259	/-
T	1917	/-	/-	/-	/173	/-

Wind reactions based on MWFRS
B Brg Wid = 5.5 Min Req = 1.5 (Truss)
T Brg Wid = 5.5 Min Req = 1.5 (Truss)
Bearings B & T are a rigid surface.

Maximum Top Chord Forces Per Ply (lbs)

Chords	Tens.	Comp.	Chords	Tens.	Comp.
A - B	21	- 6	K - L	98	- 1180
B - C	235	- 2692	L - M	101	- 1195
C - D	103	- 1196	M - N	106	- 1211
D - E	101	- 1198	N - O	98	- 1186
E - F	99	- 1188	O - P	94	- 1172
F - G	96	- 1178	P - Q	100	- 1191
G - H	99	- 1190	Q - R	104	- 1207
H - I	105	- 1209	R - S	109	- 1222
I - J	100	- 1193	S - T	134	- 1656
J - K	97	- 1178	T - U	21	- 6

Maximum Bot Chord Forces Per Ply (lbs)

Chords	Tens.	Comp.	Chords	Tens.	Comp.
B -AA	2365	- 202	X - W	1707	- 140
AA- Z	2395	- 204	W - V	1450	- 112
Z - Y	2772	- 239	V - T	1452	- 114
Y - X	2772	- 239			

Maximum Web Forces Per Ply (lbs)

Webs	Tens.	Comp.	Webs	Tens.	Comp.
C -AA	449	- 20	X -AN	57	- 704
C -AB	150	- 1759	AJ- X	817	- 24
C - Z	449	- 36	AJ-AK	0	- 56
D -AB	2	- 32	AK- L	12	- 39
AB-AC	150	- 1761	AK-AL	0	- 55
E -AC	4	- 30	AL- M	7	- 32
AC-AD	150	- 1762	AL-AM	0	- 55
G -AD	15	- 53	AM- N	37	- 133
AD-AE	151	- 1763	AM-AN	0	- 53
Z -AE	378	- 43	AN- W	51	- 36
AE-AF	0	- 54	AN-AO	47	- 701
AE- X	161	- 1794	W - S	308	- 23
H -AF	33	- 121	AO- O	16	- 59
AF-AG	0	- 55	AO-AP	46	- 699

Lumber

Top chord: 2x4 :DF-L #1&Bet. + DF-L 1800f-1.6E:;
Bot chord: 2x6 DF-L 2400f-2.0E;
Webs: 2x4 DF-L(N) #1/#2;

Nailnote

Nail Schedule:0.128"x3", min. nails
Top Chord: 1 Row @12.00" o.c.
Bot Chord: 1 Row @12.00" o.c.
Webs : 1 Row @ 4" o.c.
Use equal spacing between rows and stagger nails in each row to avoid splitting.

Special Loads

------(Lumber Dur.Fac.=1.15 / Plate Dur.Fac.=1.15)

TC: From	66 plf at	-1.33 to	66 plf at	4.03
TC: From	33 plf at	4.03 to	33 plf at	8.60
TC: From	66 plf at	8.60 to	66 plf at	36.42
BC: From	4 plf at	-1.33 to	4 plf at	0.00
BC: From	20 plf at	0.00 to	20 plf at	4.03
BC: From	10 plf at	4.03 to	10 plf at	8.25
BC: From	20 plf at	8.25 to	20 plf at	35.08
BC: From	4 plf at	35.08 to	4 plf at	36.42

BC: 331 lb Conc. Load at 4.03
BC: 153 lb Conc. Load at 6.06
BC: 1252 lb Conc. Load at 8.25

Plating Notes

All plates are 2X4 except as noted.

Wind

Wind loads and reactions based on MWFRS.

Wind loading based on both gable and hip roof types.

Purlins

In lieu of structural panels or rigid ceiling use purlins to laterally brace chords as follows:

Chord	Spacing(in oc)	Start(ft)	End(ft)
TC	24	-1.33	17.54
TC	24	4.00	31.08
TC	24	17.54	36.42
BC	120	0.15	34.94

Apply purlins to any chords above or below fillers at 24" OC unless shown otherwise above.

****WARNING**** READ AND FOLLOW ALL NOTES ON THIS DRAWING!
****IMPORTANT**** FURNISH THIS DRAWING TO ALL CONTRACTORS INCLUDING THE INSTALLERS

Trusses require extreme care in fabricating, handling, shipping, installing and bracing. Refer to and follow the latest edition of BCSI (Building Component Safety Information, by TPI and SBCA) for safety practices prior to performing these functions. Installers shall provide temporary bracing per BCSI. Unless noted otherwise, top chord shall have properly attached structural sheathing and bottom chord shall have a properly attached rigid ceiling. Locations shown for permanent lateral restraint of webs shall have continuous lateral restraint (CLR), installed with diagonal bracing installed on the CLR per BCSI sections B3, B7, or B10, as applicable. Apply plates to each face of truss and position as shown above and on the Joint Details, unless noted otherwise. Refer to drawings 160A-Z for standard plate positions. Refer to job's General Notes page for additional information.

Alpine, a division of ITW Building Components Group Inc. shall not be responsible for any deviation from this drawing, any failure to build the truss in conformance with ANSI/TPI 1, or for handling, shipping, installation and bracing of trusses. A seal on this drawing or cover page listing this drawing, indicates acceptance of professional engineering responsibility solely for the design shown. The suitability and use of this drawing for any structure is the responsibility of the Building Designer per ANSI/TPI 1 Sec.2.

For more information see these web sites: Alpine: alpineitw.com; TPI: tpinst.org; SBCA: sbcacomponents.com; ICC: iccsafe.org; AWC: awc.org

I -AG	7	-33	AP- Q	9	-36
AG-AH	0	-55	AP-AQ	46	-698
J -AH	12	-39	AQ- R	1	-17
AH-AI	0	-56	AQ- S	46	-697
AI-AJ	0	-56	V - S	42	-37
K -AJ	901	-49			

****WARNING**** READ AND FOLLOW ALL NOTES ON THIS DRAWING!

****IMPORTANT**** FURNISH THIS DRAWING TO ALL CONTRACTORS INCLUDING THE INSTALLERS

Trusses require extreme care in fabricating, handling, shipping, installing and bracing. Refer to and follow the latest edition of BCSI (Building Component Safety Information, by TPI and SBCA) for safety practices prior to performing these functions. Installers shall provide temporary bracing per BCSI. Unless noted otherwise, top chord shall have properly attached structural sheathing and bottom chord shall have a properly attached rigid ceiling. Locations shown for permanent lateral restraint of webs shall have continuous lateral restraint (CLR), installed with diagonal bracing installed on the CLR per BCSI sections B3, B7, or B10, as applicable. Apply plates to each face of truss and position as shown above and on the Joint Details, unless noted otherwise. Refer to drawings 160A-Z for standard plate positions. Refer to job's General Notes page for additional information.

Alpine, a division of ITW Building Components Group Inc. shall not be responsible for any deviation from this drawing, any failure to build the truss in conformance with ANSI/TPI 1, or for handling, shipping, installation and bracing of trusses. A seal on this drawing or cover page listing this drawing, indicates acceptance of professional engineering responsibility solely for the design shown. The suitability and use of this drawing for any structure is the responsibility of the Building Designer per ANSI/TPI 1 Sec.2.

For more information see these web sites: Alpine: alpineitw.com; TPI: tpinst.org; SBCA: sbcacomponents.com; ICC: iccsafe.org; AWC: awc.org