Changes in Fusimotor Parameters Suffice to Explain Position Thresholds, Velocity Thresholds, and Gains of the Stretch Reflex; But Produce Strong Interactions Among Them

Kian Jalaleddini[1], Ali Marjaninejad[2], Suraj Chakravarthi Raja[3], Francisco J. Valero-Cuevas[1,2]

[1]Division of Biokinesiology & Physical Therapy, [2] Department of Biomedical Engineering, [3]Ming Hsieh Department of Electrical Engineering

Motivation:

-Position threshold, velocity threshold, and gain are the preferred kinematic and EMG metrics to assess the strength of the stretch reflex.

-The thresholds describe how soon the reflex is evoked and the gain describes the sensitivity of the response.

Question: How do these metrics arise from changes in physiological parameters of the stretch reflex loop such as dynamic and static fusimotor drives?

Methods:

Neuromorphic System:

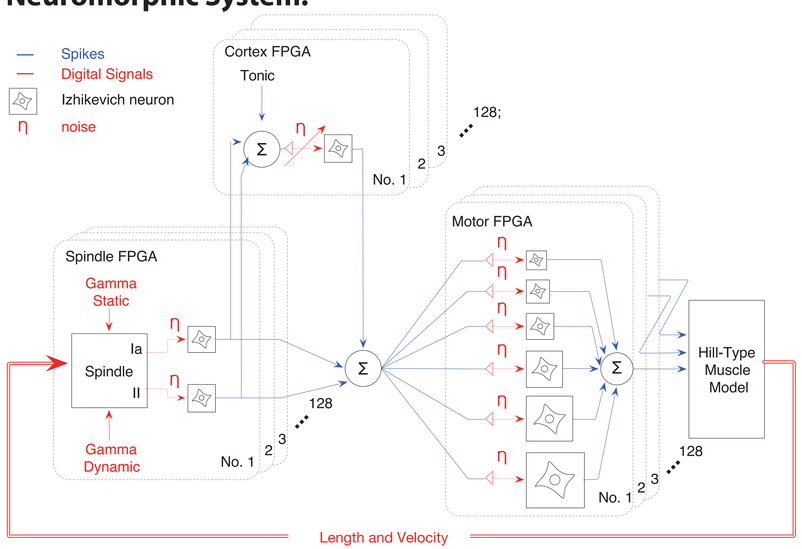

These components are implemented for the flexor and extensor muscles, which simultaneously drive a joint. For each muscle, force is calculated from a Hill-type muscle model innervated by motoneurons receiving input from muscle spindles, which include both the Primary (Ia) and Secondary (II) afferents. The system was distributed on multiple FPGAs as indicated by the blocks. The entire system uses 6 FPGA boards enabling 2 muscles with 2,304 neurons. Only half of the system (one muscle) is shown.

Methods:

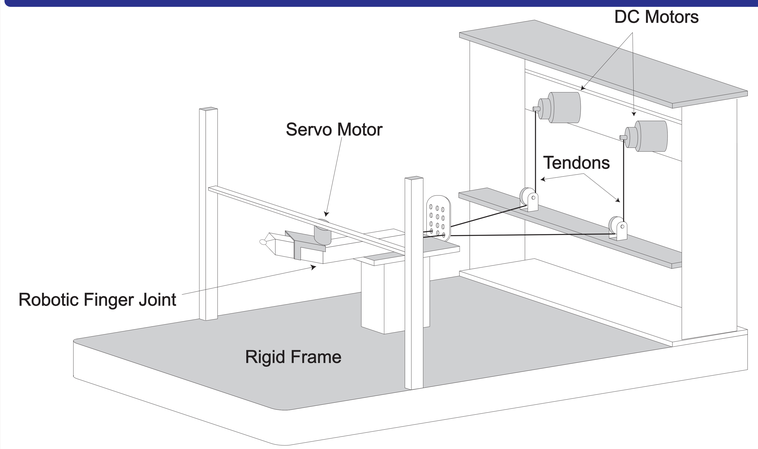

Two DC motors actuated the robotic finger joint, applying the force calculated by the motor FPGAs. The spindle FPGA was provided with the muscle length and velocity.

A servo motor applied 10 degrees perturbations to the joint. The perturbations and system parameters were systematically varied according to:

- Gamma Dynamic (Γ_D) and Gamma Static (Γ_S): [0,25,...,100] (pps)
- Joint angular position: [30,35,...85] (degrees)
- Joint angular velocity: [10,20...100] (degrees/s)

Results:

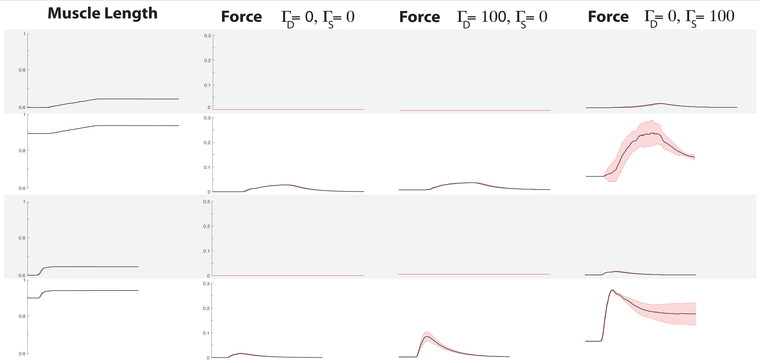

Representative recorded muscle length and force traces in different joint angles and velocities, and fusimotor drives.

Results

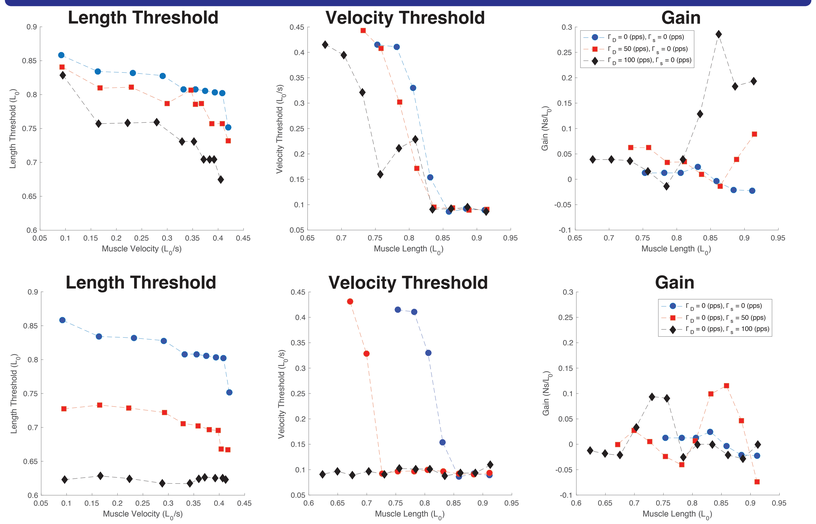

Length threshold, velocity threshold and gain were correlated with one another and were heavily modulated by the spindle fusimotor drive.

Conclusions:

- As expected, changes in fusimotor drive resulted in a wide range of thresholds and gains.
- Importantly, these changes were correlated with each other in a fusimotor-dependent way.
- We conclude that characterizing the strength of stretch reflexes requires simultaneous measurement of position threshold, velocity threshold as well as gain.

Acknowledgement:

- Ms. Maral Kasiri for data collection and visualization.
- Mr. Keegan Bate for data collection and visualization.

Funding Sources:

-NIH Grants AR050520 and AR052345 to F.V.C.

-Postdoctoral Research Scholarship from Fonds de Recherche du Québec-Nature et Technologies to K.J.

- The USC Graduate School's Provost Fellowship to A.M.