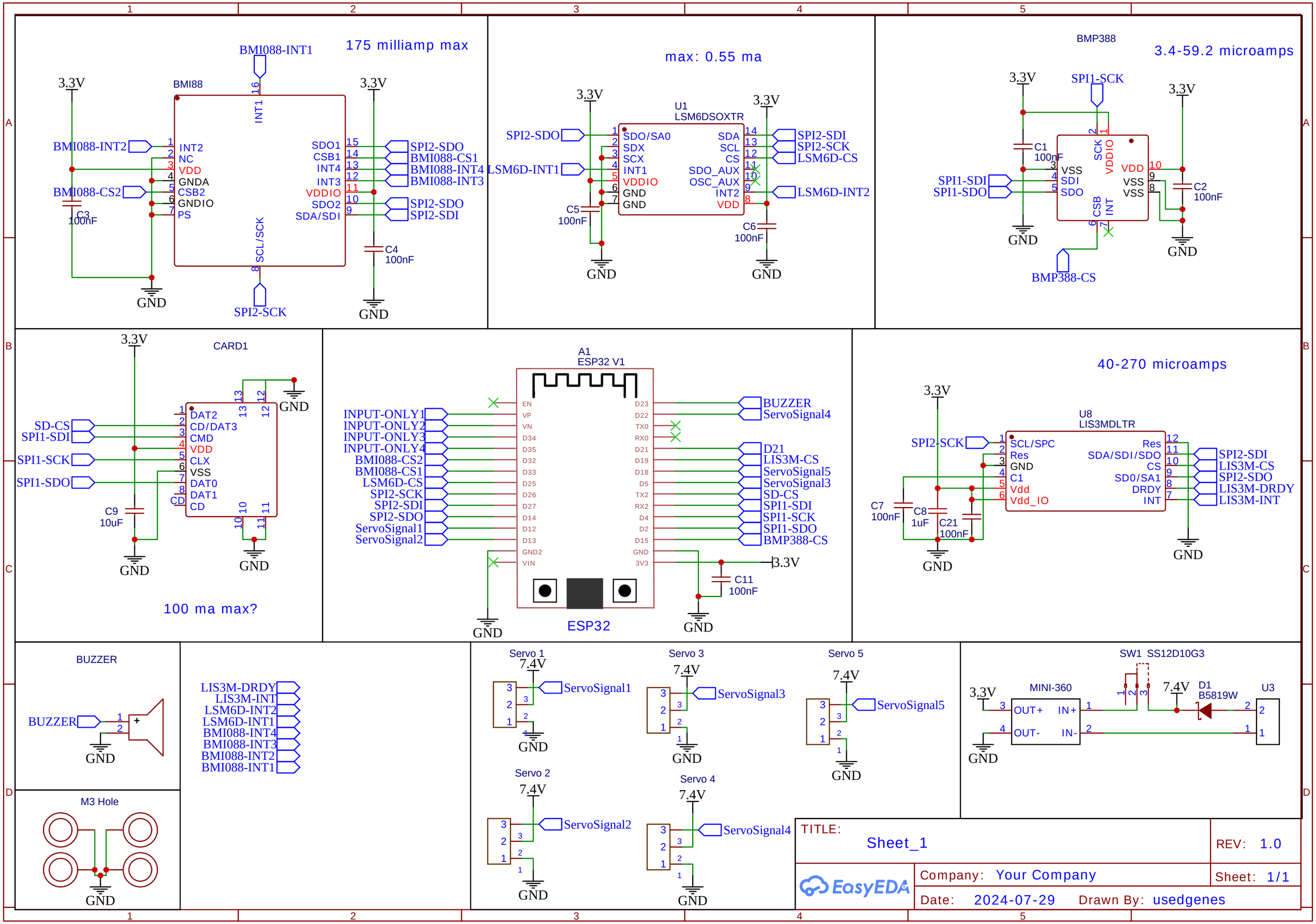
175 milliamp max
BMI088
BMI088-INT1
BMI088-INT2
BMI088-CS2
C3 100nF
3.3V
GND
INT2
NC
VDD
GNDA
CSB2
GNDIO
PS
INT1
SCL/SCK
SDO1
CSB1
INT4
INT3
VDDIO
SDO2
SDA/SDI
SPI2-SDO
BMI088-CS1
BMI088-INT4
BMI088-INT3
SPI2-SDI
SPI2-SCK
C4 100nF
max: 0.55 ma
U1
LSM6DSOXTR
SPI2-SDO
LSM6D-INT1
C5 100nF
SDO/SA0
SDX
SCX
INT1
VDDIO
GND
SDA
SCL
CS
SDO_AUX
OSC_AUX
INT2
VDD
LSM6D-CS
LSM6D-INT2
C6 100nF
BMP388
3.4-59.2 microamps
SPI1-SCK
C1 100nF
SPI1-SDI
SPI1-SDO
VSS
SDI
SDO
SCK
VDDIO
VDD
VSS
VSS
CSB
INT
C2 100nF
BMP388-CS
CARD1
SD-CS
SPI1-SDI
SPI1-SCK
SPI1-SDO
C9 10uF
DAT2
CD/DAT3
CMD
VDD
CLX
VSS
DAT0
DAT1
CD
100 ma max?
A1
ESP32 V1
INPUT-ONLY1
INPUT-ONLY2
INPUT-ONLY3
INPUT-ONLY4
BMI088-CS2
BMI088-CS1
LSM6D-CS
SPI2-SCK
SPI2-SDI
SPI2-SDO
ServoSignal1
ServoSignal2
EN
VP
VN
D34
D35
D32
D33
D25
D26
D27
D14
D12
D13
GND2
VIN
D23
D22
TX0
RX0
D21
D19
D18
D5
TX2
RX2
D4
D2
D15
GND
3V3
BUZZER
ServoSignal4
D21
LIS3M-CS
ServoSignal5
ServoSignal3
SD-CS
SPI1-SDI
SPI1-SCK
SPI1-SDO
BMP388-CS
C11 100nF
ESP32
40-270 microamps
U8
LIS3MDLTR
SPI2-SCK
C7 100nF
C8 1uF
C21 100nF
SCL/SPC
Res
GND
C1
Vdd
Vdd_IO
SDA/SDI/SDO
CS
SD0/SA1
DRDY
INT
SPI2-SDI
LIS3M-CS
SPI2-SDO
LIS3M-DRDY
LIS3M-INT
BUZZER
M3 Hole
LIS3M-DRDY
LIS3M-INT
LSM6D-INT2
LSM6D-INT1
BMI088-INT4
BMI088-INT3
BMI088-INT2
BMI088-INT1
Servo 1
Servo 2
Servo 3
Servo 4
Servo 5
7.4V
ServoSignal1
ServoSignal2
ServoSignal3
ServoSignal4
ServoSignal5
SW1 SS12D10G3
MINI-360
OUT+
OUT-
IN+
IN-
D1 B5819W
U3
TITLE:
Sheet_1
REV: 1.0
Company: Your Company
Sheet: 1/1
Date: 2024-07-29
Drawn By: usedgenes
EasyEDA