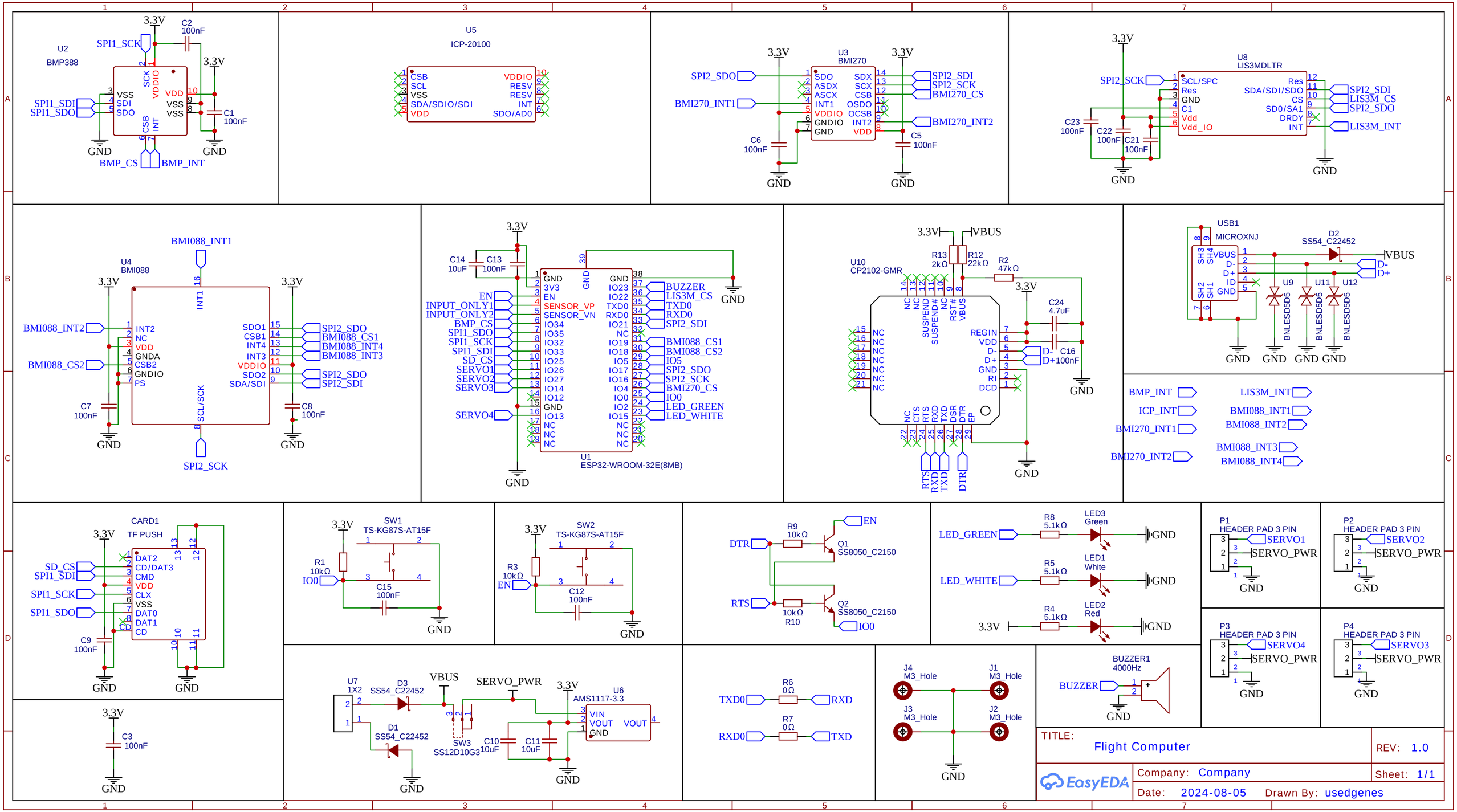
U2
BMP388
3.3V
C2
100nF
SPI1_SCK
SPI1_SDI
SPI1_SDO
VSS
SDI
SDO
SCK
VDDIO
VDD
VSS
VSS
CSB
INT
C1
100nF
GND
GND
BMP_CS
BMP_INT
U5
ICP-20100
CSB
SCL
VSS
SDA/SDIO/SDI
VDD
VDDIO
RESV
RESV
INT
SDO/AD0
U3
BMI270
3.3V
SPI2_SDO
BMI270_INT1
SDO
ASDX
ASCX
INT1
VDDIO
GNDIO
GND
SDX
SCX
CSB
OSDO
OCSB
INT2
VDD
SPI2_SDI
SPI2_SCK
BMI270_CS
BMI270_INT2
C6
100nF
C5
100nF
GND
GND
U8
LIS3MDLTR
SPI2_SCK
SCL/SPC
Res
GND
C1
Vdd
Vdd_IO
Res
SDA/SDI/SDO
CS
SD0/SA1
DRDY
INT
SPI2_SDI
LIS3M_CS
SPI2_SDO
LIS3M_INT
C23
100nF
C22
100nF
C21
100nF
GND
GND
U4
BMI088
BMI088_INT1
3.3V
BMI088_INT2
BMI088_CS2
INT2
NC
VDD
GNDA
CSB2
GNDIO
PS
INT1
SCL/SCK
SDO1
CSB1
INT4
INT3
VDDIO
SDO2
SDA/SDI
SPI2_SDO
BMI088_CS1
BMI088_INT4
BMI088_INT3
SPI2_SDO
SPI2_SDI
C7
100nF
C8
100nF
GND
GND
SPI2_SCK
C14
10uF
C13
100nF
GND
3V3
EN
INPUT_ONLY1
INPUT_ONLY2
BMP_CS
SPI1_SDO
SPI1_SCK
SPI1_SDI
SD_CS
SERVO1
SERVO2
SERVO3
SERVO4
SENSOR_VP
SENSOR_VN
IO34
IO35
IO32
IO33
IO25
IO26
IO27
IO14
IO12
IO13
IO23
IO22
TXD0
RXD0
IO21
IO19
IO18
IO5
IO17
IO16
IO4
IO0
IO2
IO15
BUZZER
LIS3M_CS
TXD0
RXD0
SPI2_SDI
BMI088_CS1
BMI088_CS2
IO5
SPI2_SDO
SPI2_SCK
BMI270_CS
IO0
LED_GREEN
LED_WHITE
U1
ESP32-WROOM-32E(8MB)
VBUS
U10
CP2102-GMR
R13
2kΩ
R12
22kΩ
R2
47kΩ
C24
4.7uF
C16
100nF
REGIN
VDD
D-
D+
GND
RI
DCD
RTS
RXD
TXD
DTR
USB1
MICROXNJ
D2
SS54_C22452
U9
U11
U12
BNLESD5D5
BMP_INT
ICP_INT
BMI270_INT1
BMI270_INT2
LIS3M_INT
BMI088_INT1
BMI088_INT2
BMI088_INT3
BMI088_INT4
CARD1
TF PUSH
DAT2
CD/DAT3
CMD
VDD
CLX
VSS
DAT0
DAT1
CD
SD_CS
SPI1_SDI
SPI1_SCK
SPI1_SDO
C9
100nF
SW1
TS-KG87S-AT15F
R1
10kΩ
IO0
C15
100nF
SW2
TS-KG87S-AT15F
R3
10kΩ
EN
C12
100nF
DTR
R9
10kΩ
Q1
SS8050_C2150
RTS
10kΩ
R10
Q2
SS8050_C2150
LED_GREEN
R8
5.1kΩ
LED3
Green
LED_WHITE
R5
5.1kΩ
LED1
White
R4
5.1kΩ
LED2
Red
P1
HEADER PAD 3 PIN
SERVO1
SERVO_PWR
P2
HEADER PAD 3 PIN
SERVO2
SERVO_PWR
P3
HEADER PAD 3 PIN
SERVO4
SERVO_PWR
P4
HEADER PAD 3 PIN
SERVO3
SERVO_PWR
C3
100nF
U7
1X2
D3
SS54_C22452
D1
SS54_C22452
SERVO_PWR
SW3
SS12D10G3
C10
10uF
C11
10uF
U6
AMS1117-3.3
VIN
VOUT
GND
TXD0
RXD0
R6
0Ω
R7
0Ω
RXD
TXD
J4
M3_Hole
J1
M3_Hole
J3
M3_Hole
J2
M3_Hole
BUZZER1
4000Hz
BUZZER
TITLE:
Flight Computer
REV: 1.0
Company: Company
Sheet: 1/1
Date: 2024-08-05
Drawn By: usedgenes
EasyEDA