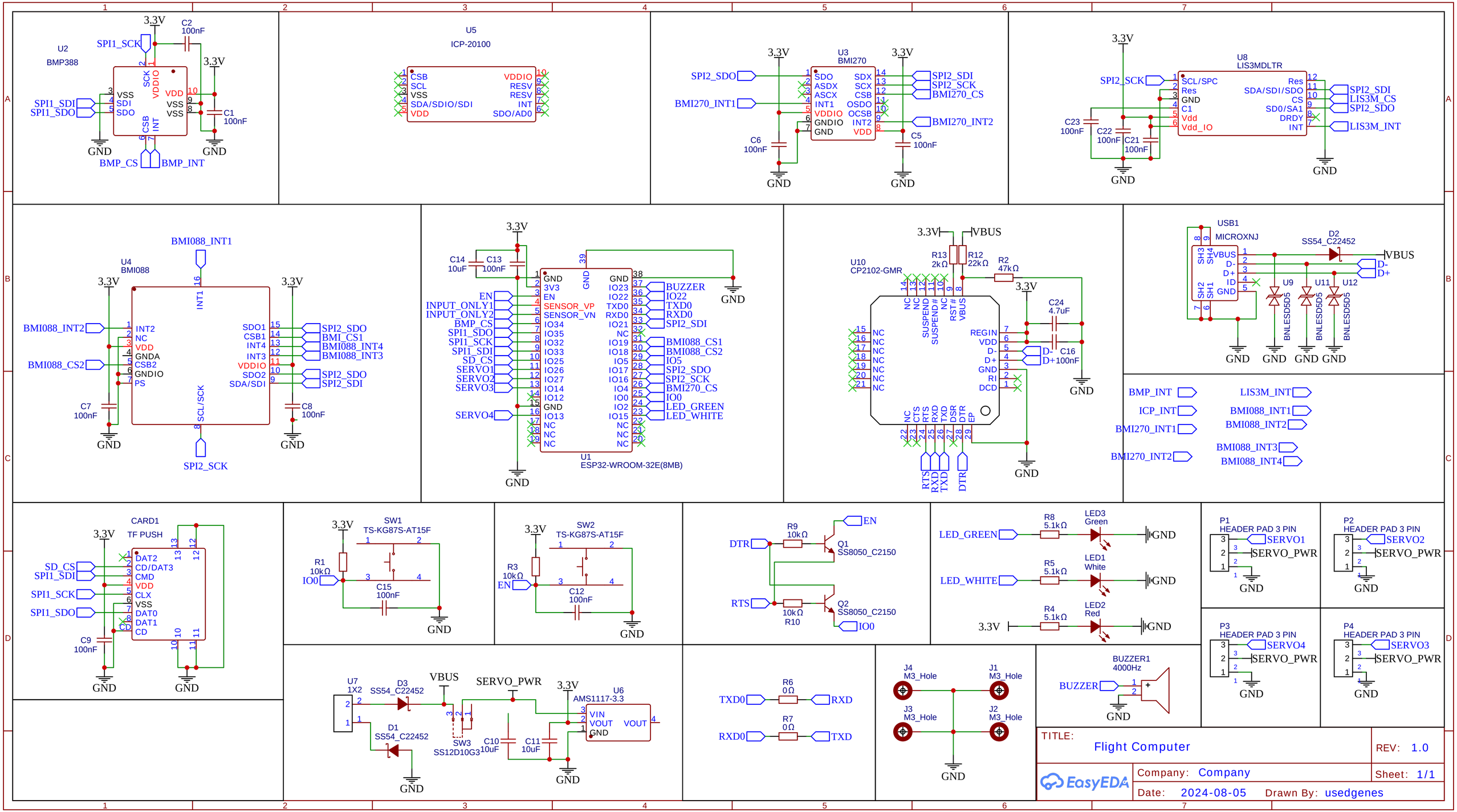
U2
BMP388
3.3V
C2
100nF
SPI1_SCK
SPI1_SDI
SPI1_SDO
VSS
SDI
SDO
SCK
VDDIO
VDD
VSS
VSS
CSB
INT
C1
100nF
GND
GND
BMP_CS
BMP_INT
U5
ICP-20100
CSB
SCL
VSS
SDA/SDIO/SDI
VDD
VDDIO
RESV
RESV
INT
SDO/AD0
U3
BMI270
SPI2_SDO
BMI270_INT1
SDO
ASDX
ASCX
INT1
VDDIO
GNDIO
GND
SDX
SCX
CSB
OSDO
OCSB
INT2
VDD
SPI2_SDI
SPI2_SCK
BMI270_CS
BMI270_INT2
C6
100nF
C5
100nF
U8
LIS3MDLTR
SPI2_SCK
SCL/SPC
Res
GND
C1
Vdd
Vdd_IO
Res
SDA/SDI/SDO
CS
SD0/SA1
DRDY
INT
SPI2_SDI
LIS3M_CS
SPI2_SDO
LIS3M_INT
C23
100nF
C22
100nF
C21
100nF
U4
BMI088
BMI088_INT1
BMI088_INT2
BMI088_CS2
INT2
NC
VDD
GNDA
CSB2
GNDIO
PS
INT1
SCL/SCK
SDO1
CSB1
INT4
INT3
VDDIO
SDO2
SDA/SDI
BMI_CS1
BMI088_INT4
BMI088_INT3
SPI2_SDO
SPI2_SDI
C7
100nF
C8
100nF
SPI2_SCK
C14
10uF
C13
100nF
EN
INPUT_ONLY1
INPUT_ONLY2
BMP_CS
SPI1_SDO
SPI1_SCK
SPI1_SDI
SD_CS
SERVO1
SERVO2
SERVO3
SERVO4
GND
3V3
EN
SENSOR_VP
SENSOR_VN
IO34
IO35
IO32
IO33
IO25
IO26
IO27
IO14
IO12
GND
IO13
NC
IO23
IO22
TXD0
RXD0
IO21
IO19
IO18
IO5
IO17
IO16
IO4
IO0
IO2
IO15
BUZZER
IO22
TXD0
RXD0
SPI2_SDI
BMI088_CS1
BMI088_CS2
IO5
SPI2_SDO
SPI2_SCK
BMI270_CS
IO0
LED_GREEN
LED_WHITE
U1
ESP32-WROOM-32E(8MB)
U10
CP2102-GMR
VBUS
R13
2kΩ
R12
22kΩ
R2
47kΩ
C24
4.7uF
C16
100nF
REGIN
VDD
D-
D+
GND
RI
DCD
RTS
RXD
TXD
DTR
USB1
MICROXNJ
SH3
SH4
VBUS
D-
D+
ID
GND
SH2
SH1
D2
SS54_C22452
U9
U11
U12
BNLESD5D5
BMP_INT
ICP_INT
BMI270_INT1
BMI270_INT2
LIS3M_INT
BMI088_INT1
BMI088_INT2
BMI088_INT3
BMI088_INT4
CARD1
TF PUSH
SD_CS
SPI1_SDI
SPI1_SCK
SPI1_SDO
DAT2
CD/DAT3
CMD
VDD
CLX
VSS
DAT0
DAT1
CD
C9
100nF
SW1
TS-KG87S-AT15F
R1
10kΩ
IO0
C15
100nF
SW2
TS-KG87S-AT15F
R3
10kΩ
EN
C12
100nF
DTR
R9
10kΩ
Q1
SS8050_C2150
RTS
10kΩ
R10
Q2
SS8050_C2150
IO0
LED_GREEN
LED_WHITE
R8
5.1kΩ
R5
5.1kΩ
R4
5.1kΩ
LED3
Green
LED1
White
LED2
Red
P1
HEADER PAD 3 PIN
SERVO1
SERVO_PWR
P2
HEADER PAD 3 PIN
SERVO2
SERVO_PWR
P3
HEADER PAD 3 PIN
SERVO4
SERVO_PWR
P4
HEADER PAD 3 PIN
SERVO3
SERVO_PWR
U7
1X2
D3
SS54_C22452
D1
SS54_C22452
VBUS
SERVO_PWR
SW3
SS12D10G3
C10
10uF
C11
10uF
U6
AMS1117-3.3
VIN
VOUT
GND
TXD0
RXD0
R6
0Ω
R7
0Ω
RXD
TXD
J4
M3_Hole
J1
M3_Hole
J3
M3_Hole
J2
M3_Hole
BUZZER1
4000Hz
BUZZER
TITLE:
Flight Computer
REV: 1.0
Company: Company
Sheet: 1/1
Date: 2024-08-05
Drawn By: usedgenes
EasyEDA