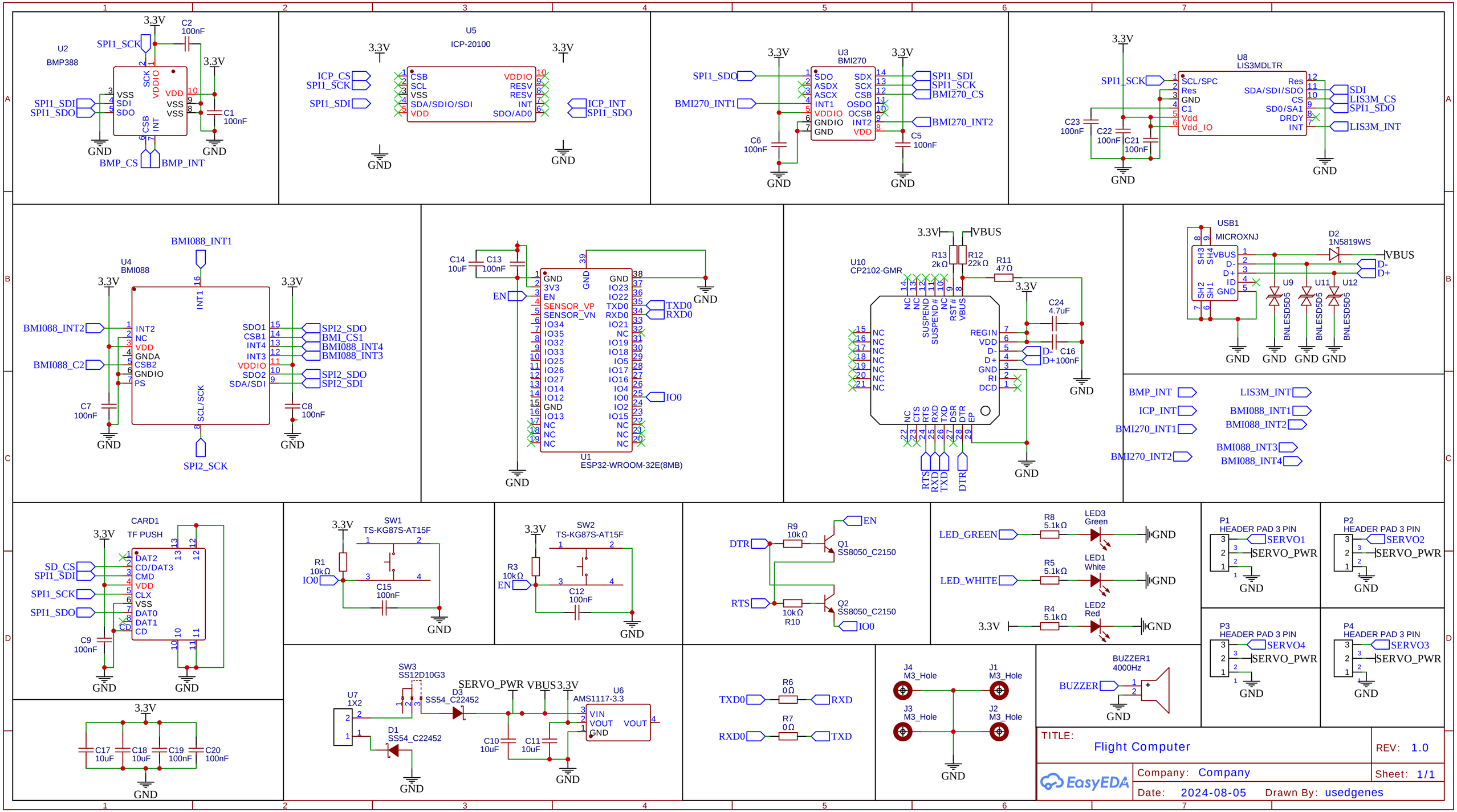
U2
BMP388
3.3V
C2
100nF
SPI1_SCK
SPI1_SDI
SPI1_SDO
VSS
SDI
SDO
SCK
VDDIO
VDD
VSS
VSS
CSB
INT
C1
100nF
GND
GND
BMP_CS
BMP_INT
U5
ICP-20100
ICP_CS
SPI1_SCK
SPI1_SDI
CSB
SCL
VSS
SDA/SDIO/SDI
VDD
VDDIO
RESV
RESV
INT
SDO/AD0
ICP_INT
SPI1_SDO
U3
BMI270
SPI1_SDO
BMI270_INT1
SDO
ASDX
ASCX
INT1
VDDIO
GNDIO
GND
SDX
SCX
CSB
OSDO
OCSB
INT2
VDD
SPI1_SDI
SPI1_SCK
BMI270_CS
BMI270_INT2
C6
100nF
C5
100nF
U8
LIS3MDLTR
SCL/SPC
Res
GND
C1
Vdd
Vdd_IO
Res
SDA/SDI/SDO
CS
SD0/SA1
DRDY
INT
SDI
LIS3M_CS
SPI1_SDO
LIS3M_INT
C23
100nF
C22
100nF
C21
100nF
U4
BMI088
BMI088_INT1
INT1
BMI088_INT2
INT2
NC
VDD
GNDA
CSB2
GNDIO
PS
BMI088_C2
SDO1
CSB1
INT4
INT3
VDDIO
SDO2
SDA/SDI
SPI2_SDO
BMI_CS1
BMI088_INT4
BMI088_INT3
SPI2_SDO
SPI2_SDI
SCL/SCK
SPI2_SCK
C7
100nF
C8
100nF
C14
10uF
C13
100nF
EN
GND
3V3
SENSOR_VP
SENSOR_VN
IO34
IO35
IO32
IO33
IO25
IO26
IO27
IO14
IO12
IO13
IO23
IO22
TXD0
RXD0
IO21
IO19
IO18
IO5
IO17
IO16
IO4
IO0
IO2
IO15
TXD0
RXD0
IO0
U1
ESP32-WROOM-32E(8MB)
U10
CP2102-GMR
VBUS
R13
2kΩ
R12
22kΩ
R11
47Ω
C24
4.7uF
C16
100nF
REGIN
VDD
D-
D+
GND
RI
DCD
RTS
RXD
TXD
DTR
USB1
MICROXNJ
VBUS
D-
D+
ID
GND
D2
1N5819WS
U9
U11
U12
BNLESD5D5
BMP_INT
ICP_INT
BMI270_INT1
BMI270_INT2
LIS3M_INT
BMI088_INT1
BMI088_INT2
BMI088_INT3
BMI088_INT4
CARD1
TF PUSH
SD_CS
SPI1_SDI
SPI1_SCK
SPI1_SDO
DAT2
CD/DAT3
CMD
VDD
CLX
VSS
DAT0
DAT1
CD
C9
100nF
SW1
TS-KG87S-AT15F
R1
10kΩ
IO0
C15
100nF
SW2
TS-KG87S-AT15F
R3
10kΩ
EN
C12
100nF
DTR
R9
10kΩ
Q1
SS8050_C2150
RTS
10kΩ
R10
Q2
SS8050_C2150
LED_GREEN
R8
5.1kΩ
LED3
Green
LED_WHITE
R5
5.1kΩ
LED1
White
R4
5.1kΩ
LED2
Red
P1
HEADER PAD 3 PIN
SERVO1
SERVO_PWR
P2
HEADER PAD 3 PIN
SERVO2
SERVO_PWR
P3
HEADER PAD 3 PIN
SERVO4
SERVO_PWR
P4
HEADER PAD 3 PIN
SERVO3
SERVO_PWR
C17
10uF
C18
10uF
C19
100nF
C20
100nF
SW3
SS12D10G3
U7
1X2
D3
SS54_C22452
D1
SS54_C22452
SERVO_PWR
VBUS
U6
AMS1117-3.3
VIN
VOUT
GND
C10
10uF
C11
10uF
TXD0
R6
0Ω
RXD
RXD0
R7
0Ω
TXD
J4
M3_Hole
J1
M3_Hole
J3
M3_Hole
J2
M3_Hole
BUZZER1
4000Hz
BUZZER
TITLE:
Flight Computer
REV: 1.0
Company: Company
Sheet: 1/1
Date: 2024-08-05
Drawn By: usedgenes
EasyEDA