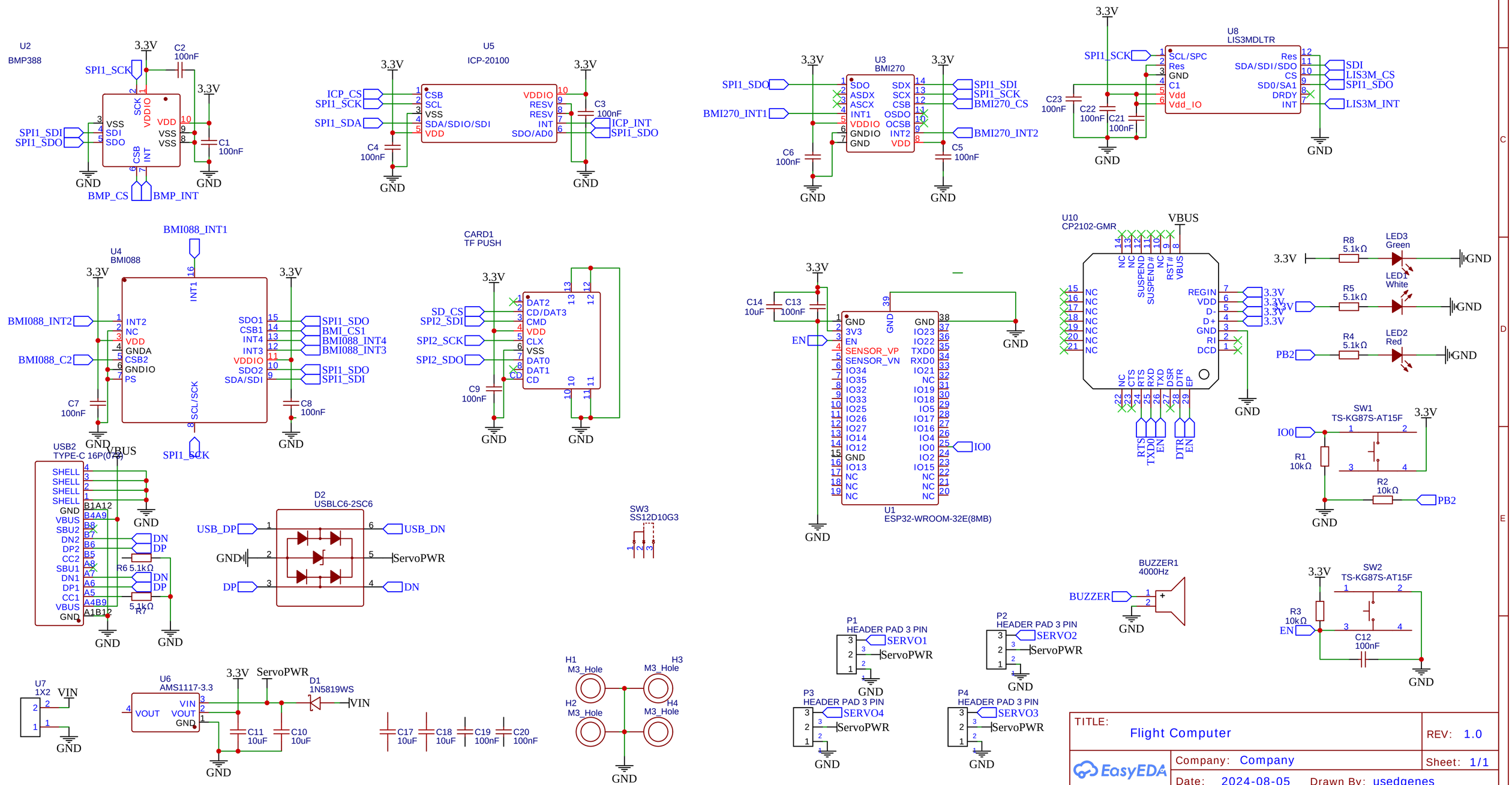

TITLE: Flight Computer	REV: 1.0
Company: Company	Sheet: 1/1
Date: 2024-08-05	Drawn By: usedgenes