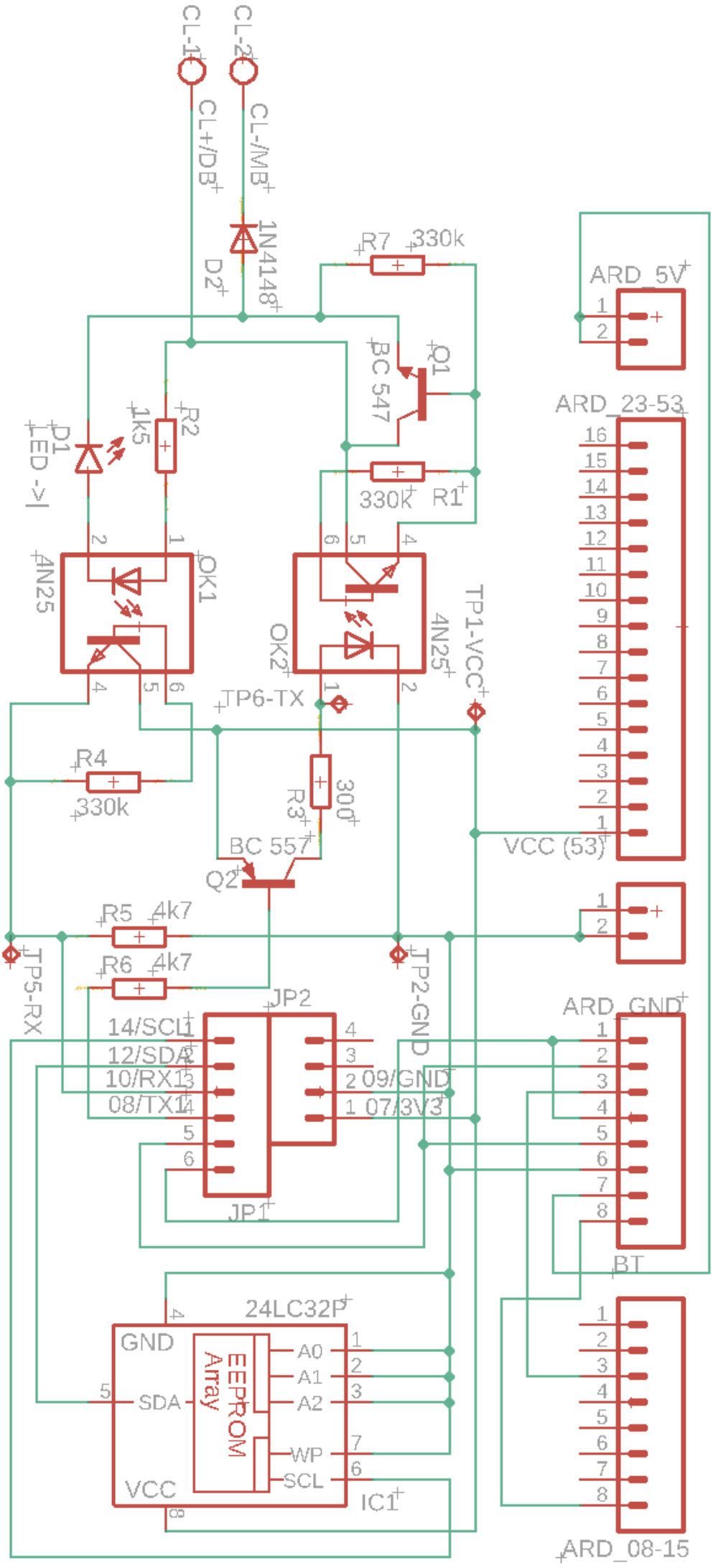
CL-1
CL-2
CL+/DB
CL-/MB
D2
1N4148
R7
330k
ARD_5V
BC 547
Q1
ARD_23-53
R2
1k5
D1
LED -V|
330k
R1
4N25
OK1
OK2
4N25
TP1-VCC
TP6-TX
R4
330k
R3
300
BC 557
Q2
VCC (53)
R5
4k7
R6
4k7
TP5-RX
TP2-GND
JP2
14/SCL
12/SDA
10/RX1
08/TX1
09/GND
07/3V3
JP1
ARD_GND
BT
24LC32P
GND
SDA
VCC
EEPROM Array
A0
A1
A2
WP
SCL
IC1
ARD_08-15