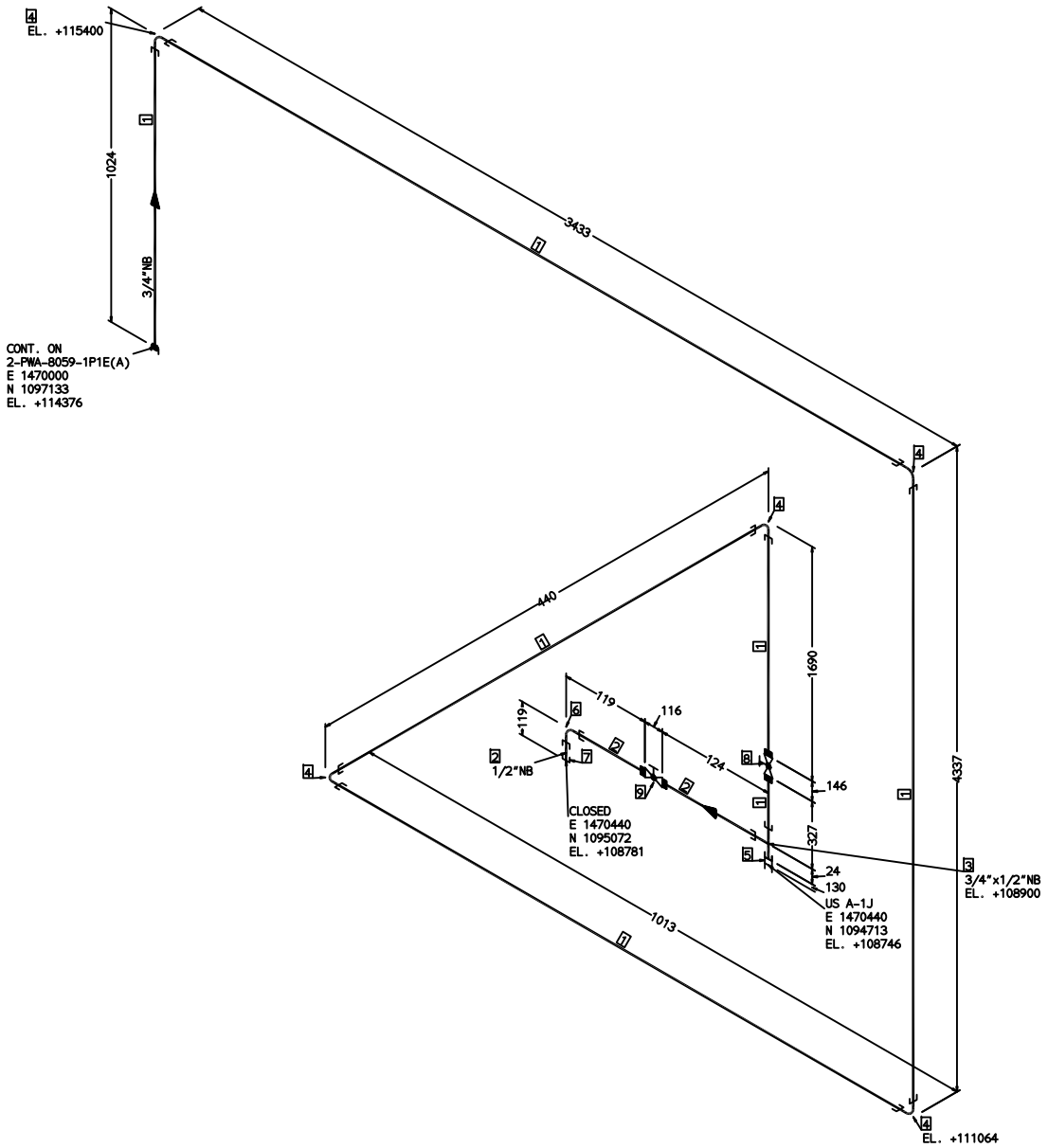

BILL OF MATERIAL:

FABRICATION MATERIALS

PT NO.	DESCRIPTION	NB (IN)	ITEMCODE	QTY
	PIPE			
1	PIPE SMLS T&C ASME B36.10M ASTM A106 GR.B GALV. SCH 80	3/4	EPPPSM1515AZZ0IS8	12.0M
2	PIPE SMLS T&C ASME B36.10M ASTM A106 GR.B GALV. SCH 80	1/2	EPPPSM1515AZZ0GS8	0.3M
	FITTINGS			
3	TEE RED. FORGED THRD(NPT-F) CL.3000 ASME B16.11 ASTM A105N GALV.	3/4 x 1/2	EPJTRFN1810JZZ0I0GL3	1
4	ELBOW 90 DEG FORGED THRD(NPT-F) CL.3000 ASME B16.11 ASTM A105N GALV.	3/4	EPJEQFN1810JZZ0IL3	5
5	Quick Universal Coupling FORGED THRD(NPT-F) CL.3000 MANUF. STD ASTM A105N GALV. (Special)	3/4	EPJCY?FN1810MZZ0IL3	1
6	ELBOW 90 DEG FORGED THRD(NPT-F) CL.3000 ASME B16.11 ASTM A105N GALV.	1/2	EPJEQFN1810JZZ0GL3	1

ERECTION MATERIALS

PT NO.	DESCRIPTION	NB (IN)	ITEMCODE	QTY
	FITTINGS			
7	CAP FORGED THRD(NPT-F) CL.3000 ASME B16.11 ASTM A105N GALV.	1/2	EPJK0FN1810JZZ0GL3	1
	VALVES / IN-LINE ITEMS			
8	GLOBE VALVE THRD (FNPT) CL.800 BB OS&Y SWIVEL PLUG TYPE DISC HO API 602 ASME B16.11 Body:ASTM A105N TRIM: CN 8 (AS PER API 600)	3/4	EPVVLA68B0108PEADC1ZZ0I	1
9	GLOBE VALVE THRD (FNPT) CL.800 BB OS&Y SWIVEL PLUG TYPE DISC HO API 602 ASME B16.11 Body:ASTM A105N TRIM: CN 8 (AS PER API 600)	1/2	EPVVLA68B0108PEADC1ZZ0G	1

REV.	DATE	PURPOSE OF ISSUE	PREP. BY	CHKD. BY	APPD. BY	AUTH. BY
00	08.07.23	AFC	M.L	B.L	A.K	H.R

EICD
Contract No. KPR- 4-HD-99/187

Kangan Petro-Refining Co
KPRC HDPE

SCALE: N.S

DRAWING TITLE:
Piping Isometric Drawing for
0.75-PWA-8034-1P1E(A)

DRAWING No.	CLASS	REV.	SHEET:	SIZE:
KP-50-000-DD-PI-ISO-1001	3	00	1 OF 1	A3

DESIGN TEMP.(C): 85degC	TEST FLUID: HYDRO PNEU	PWHT (Y/N): NO	P&ID NO.: /KP-50-800-DD-PR-PID-0008-12/30
DESIGN PRESS.(bar): 15.2barg	PRESS. TEST(bar): 22.8barg	NDT: PT5% Random	GENERAL NOTES:
OPERATING TEMP.(C): 35degC	INSULATION TYPE: -	STRESS JOB NO :	1. ALL DIMENSIONS, ELEVATIONS, CORDINATES ARE IN MILLIMETER.
OPERATING PRESS.(bar): 8.5barg	INSULATION THK.: -	PAINT CODE NO.: NO PAINT	2. ROOT GAPS OF BUTT WELD FITTINGS ARE INCLUDED IN DIMENSIONS.

3. PIPING ROUTES, DIMENSIONS AND ELEVATIONS FOR 1 1/2" AND SMALLER SHALL BE CHECKED BY CONSTRUCTION CONTRACTOR.
4. FOR 1 1/2" AND SMALLER, SUPPORTS TO BE ADJUSTED BY CONSTRUCTION CONTRACTOR.
5. THE INSULATION IS BASED ON THE MAXIMUM /MAIN SIZE OF THE PIPE,FOR OTHER THICKNESS OF INSULATION REFER TO PROJECT INSULATION SPECIFICATION.

B.W. S.W. TRD. PIPE SUPPORT PIPE INSULATION

ISO Dwg. Run Time : 8 Jul 2023 15:38