SX1262 LoRa designed for 920-925MHz

Single-pin control mode — use one control pin (CTRL, pin 4) and tie pin 6 to VDD.CTRL = HIGH → RFC connected to RF1CTRL = LOW → RFC connected to RF2.

DIO2 can be configured to drive an RF switch through the use of the command SetDio2AsRfSwitchCtrl(...).
In this mode, DIO2 will be at a logical 1 during Tx and at a logical 0 in any other mode.

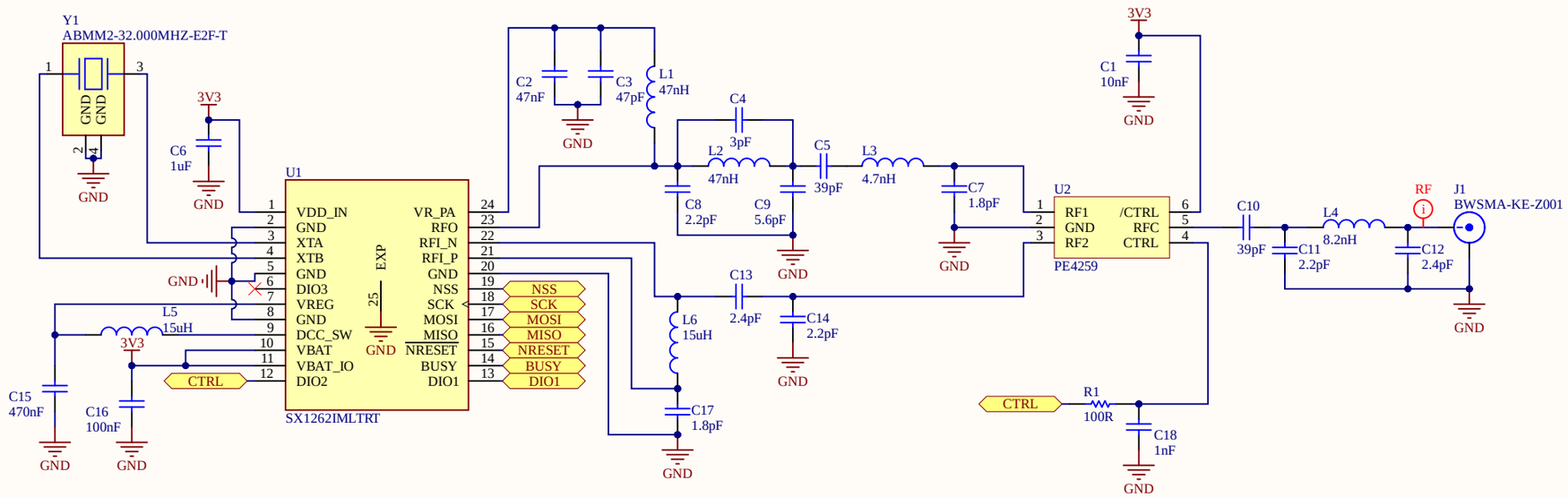

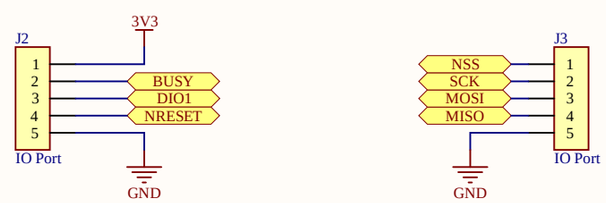

Title: *920-925MHz LoRa design using SX1262*

Page Contents: LoRa_SX1262.SchDoc		
Drawn By: Engr. Usman Haider	Checked By: *	
Size: A4	Company: *System Cortex*	REV. A
Date: 3/3/2026	Time: 12:37:10 AM	Sheet 1 of 1
Email: usmanhaider342164@gmail.com		
File: C:\Users\usman\Documents\Altium\LoRa_SX1262\LoRa_SX1262.SchDoc		

SYSTEM Cortex

LoRa 920-925MHz Long-Range RF Module

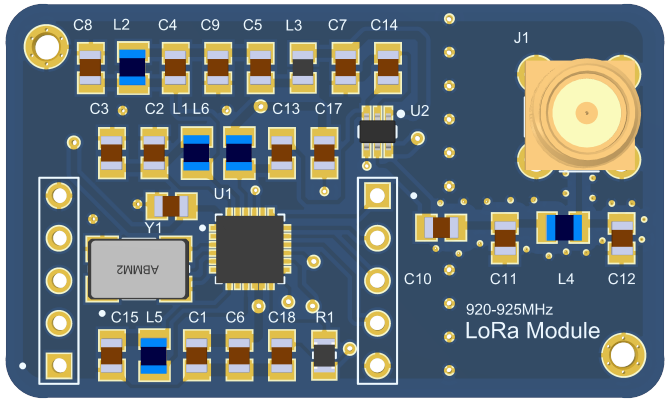

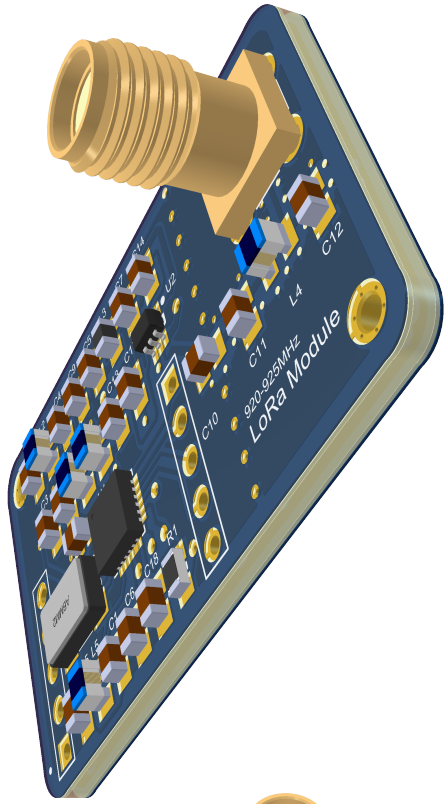

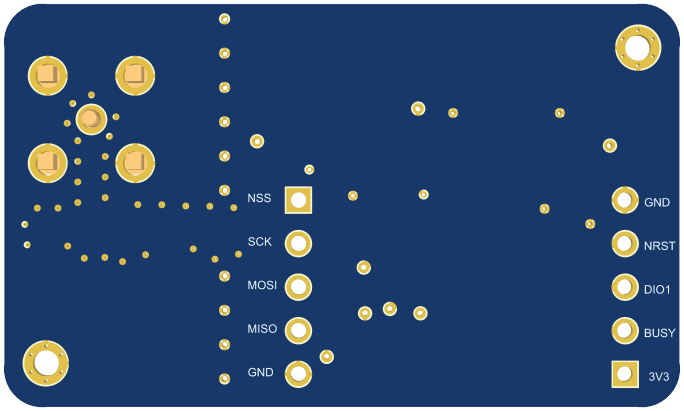

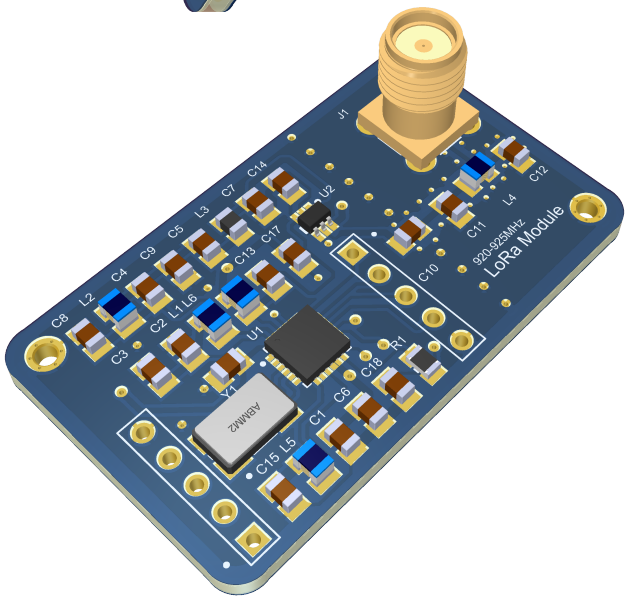

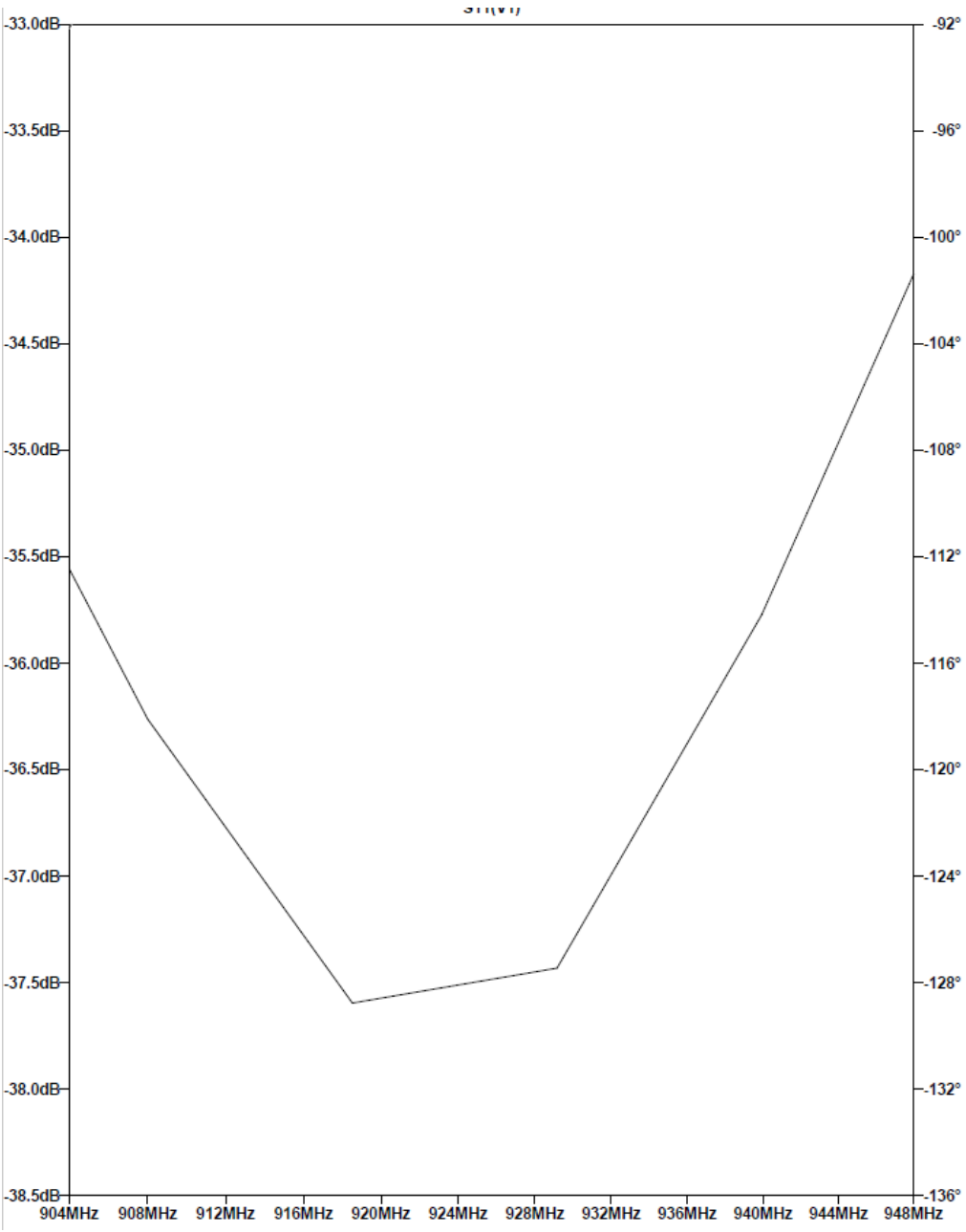

Top Layer

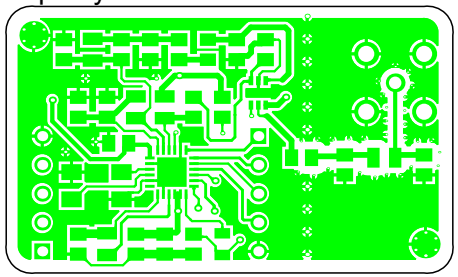

GND

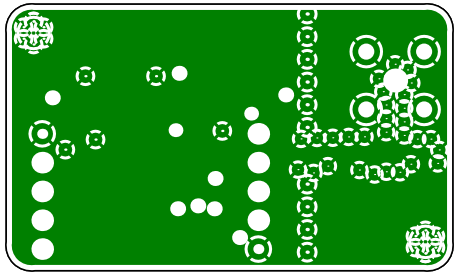

Power

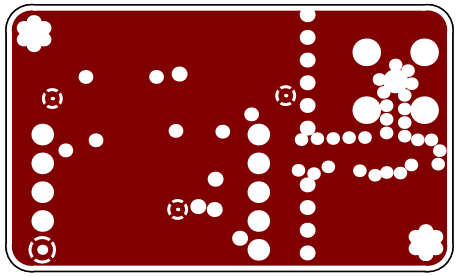

Bottom Layer

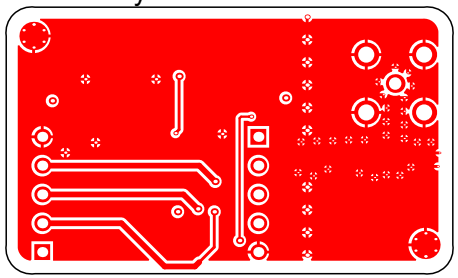

Return Loss S11 (<-37dB) of RF Matching Network @ 920-925MHz