USB Connector and LDO Regulator (+5V to +3V3)

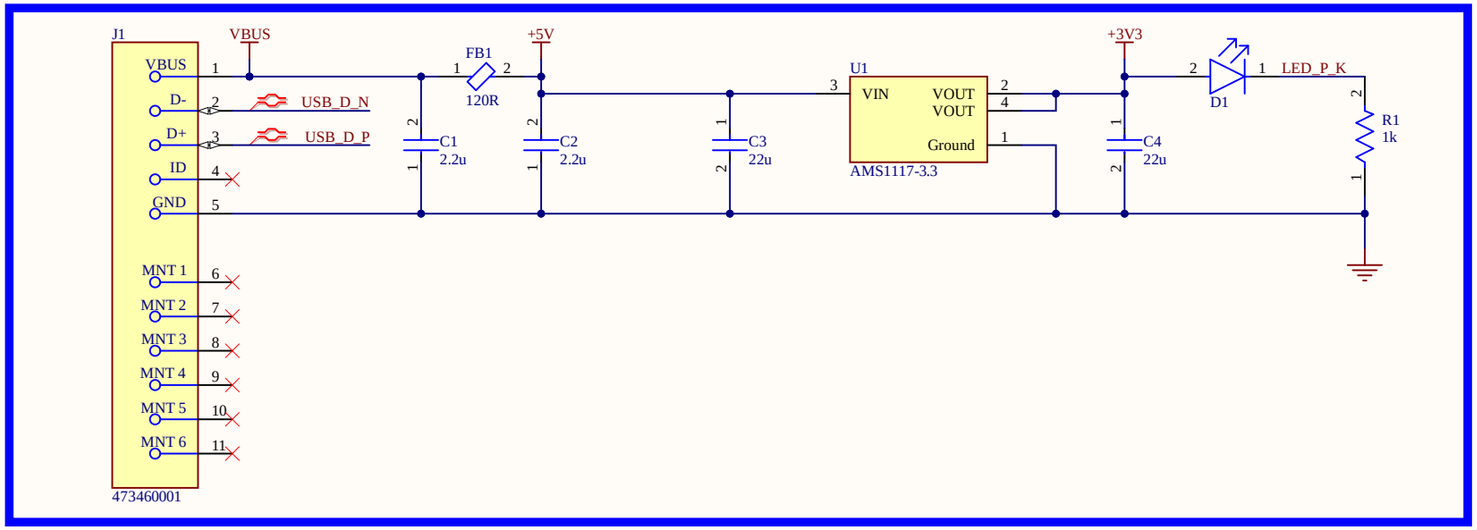

STM32F411CEU6

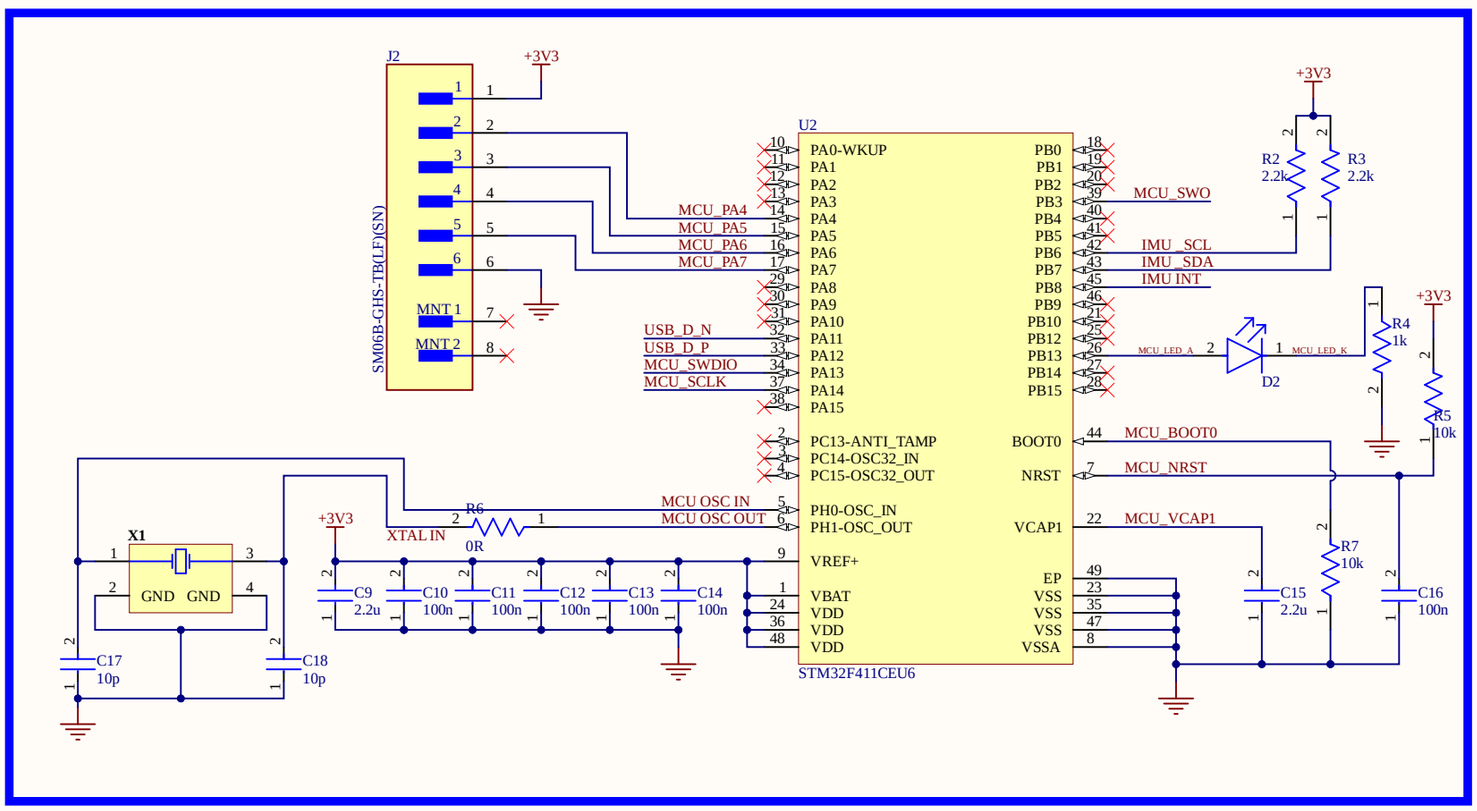

Temperature Sensor

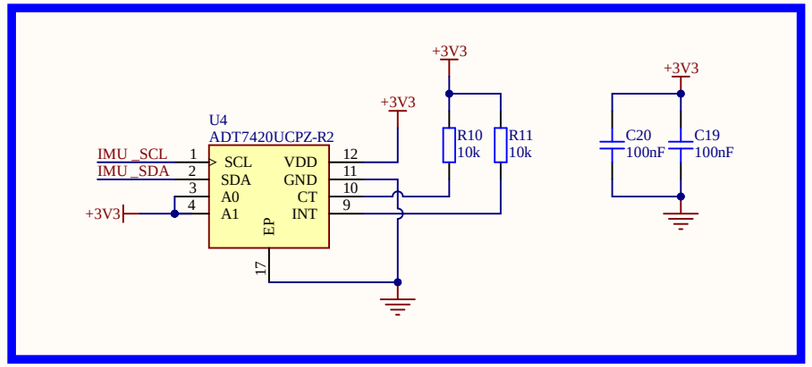

Programming Connector

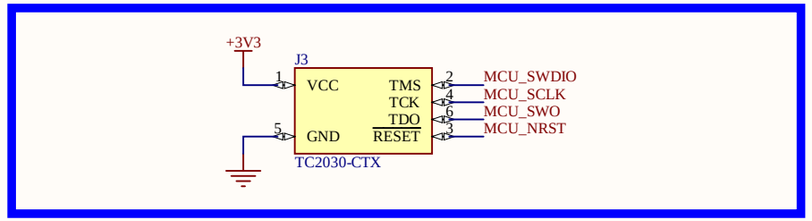

Gyroscope, Accelerometer & DMP

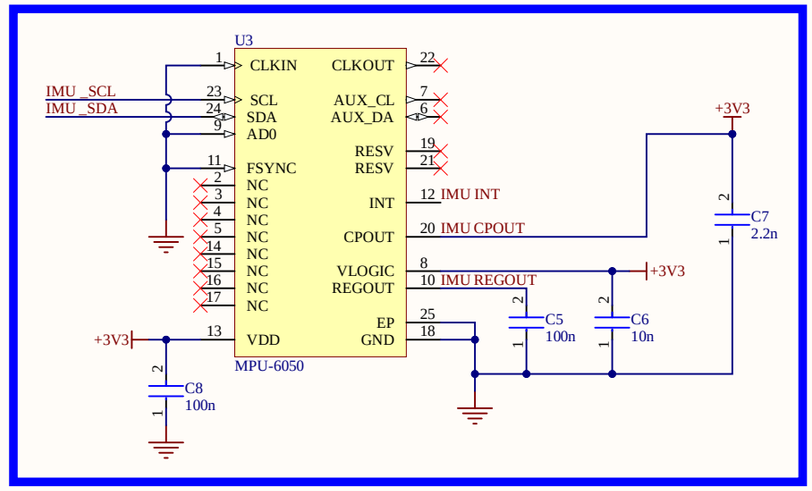

Title: *Gyroscope & Temp. Sensor using STM32*		
Page Contents: STM32_PCB_Design.SchDoc		
Drawn By: Engr. Usman Haider	Checked By: *	
Size: A4	Company: *System Cortex*	REV. A
Date: 1/12/2026	Time: 7:28:49 PM	Sheet 1 of 1
Email: usmanhaider342164@gmail.com		
File: C:\Users\usman\Documents\Altium\STM32_Temperature, Gryoscope\STM32_PCB_Design.SchDoc		

SYSTEM Cortex

Realistic View

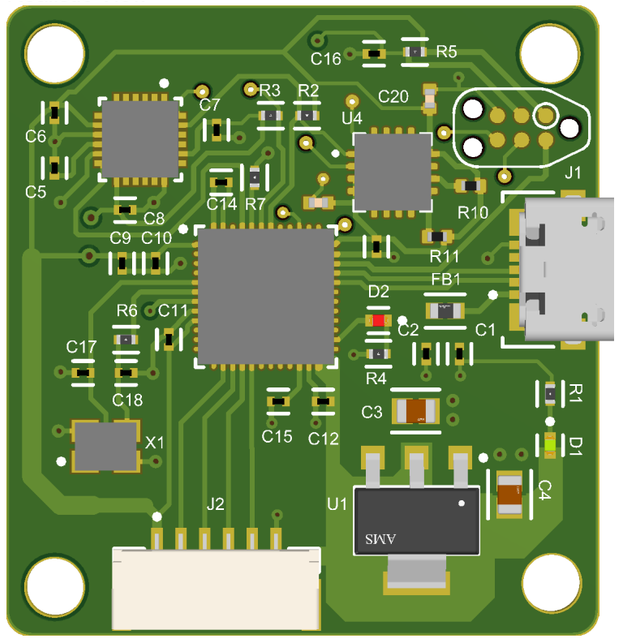

Layer Stack Legend

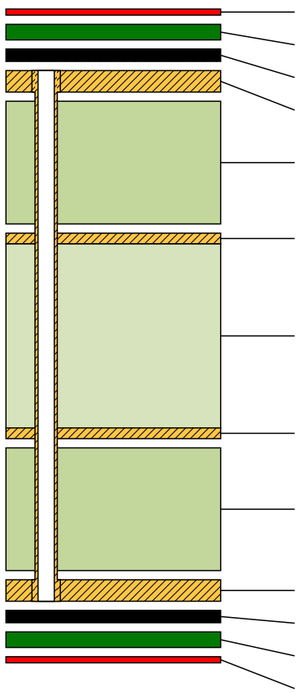

Material	Layer	Thickness	Dielectric Material	Type	Gerber
	Top Overlay			Legend	GTO
Surface Material	Top Solder	0.03mm	SM-001	Solder Mask	GTS
PbSn	Top Surface Finish	0.02mm		Surface Finish	
CF-004	**Top Layer**	**0.04mm**		**Signal**	**GTL**
Prepreg		*0.20mm*	*PP-017*	*Dielectric*	
CF-004	**L2 (GND)**	**0.02mm**		**Signal**	**G1**
Core		*1.06mm*	*Core-039*	*Dielectric*	
CF-004	**L3 (GND)**	**0.02mm**		**Signal**	**G2**
Prepreg		*0.20mm*	*PP-017*	*Dielectric*	
CF-004	**Bottom Layer**	**0.04mm**		**Signal**	**GBL**
PbSn	Bottom Surface Finish	0.02mm		Surface Finish	
Surface Material	Bottom Solder	0.03mm	SM-001	Solder Mask	GBS
	Bottom Overlay			Legend	GBO

Total thickness: 1.66mm

Top Layer

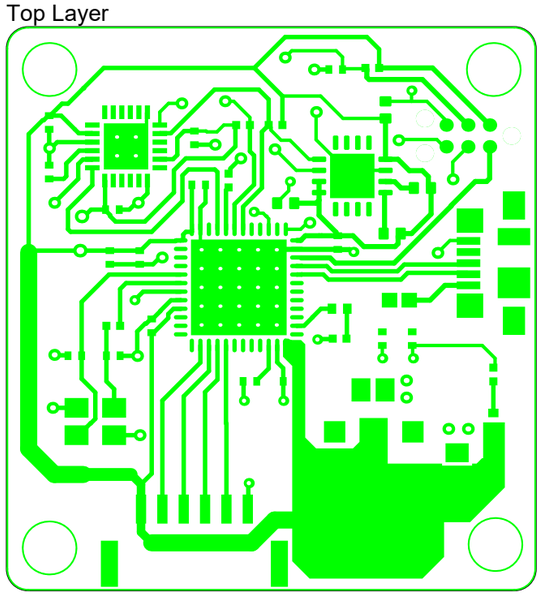

L2 (GND)

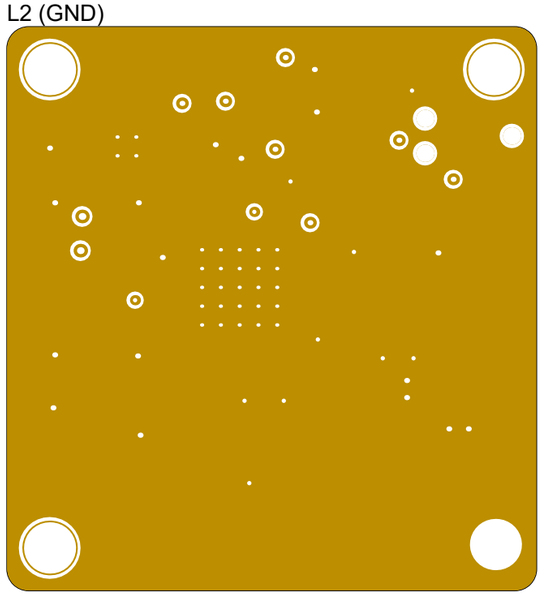

L3 (GND)

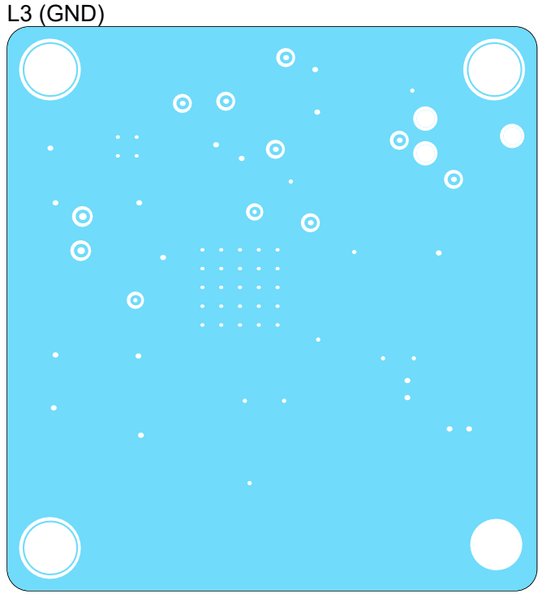

Bottom Layer

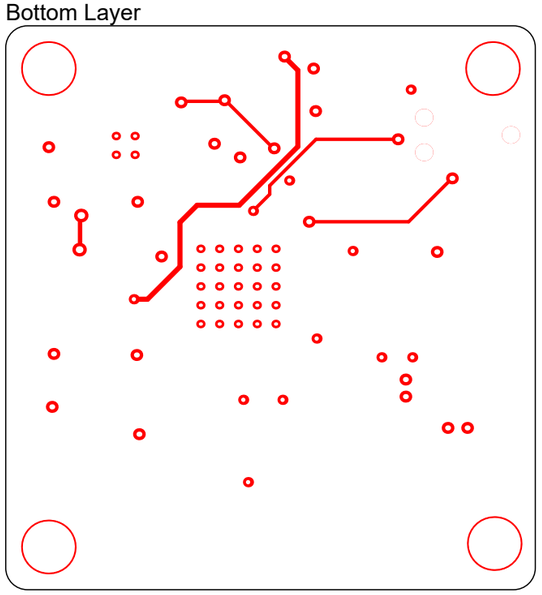

View from Top side

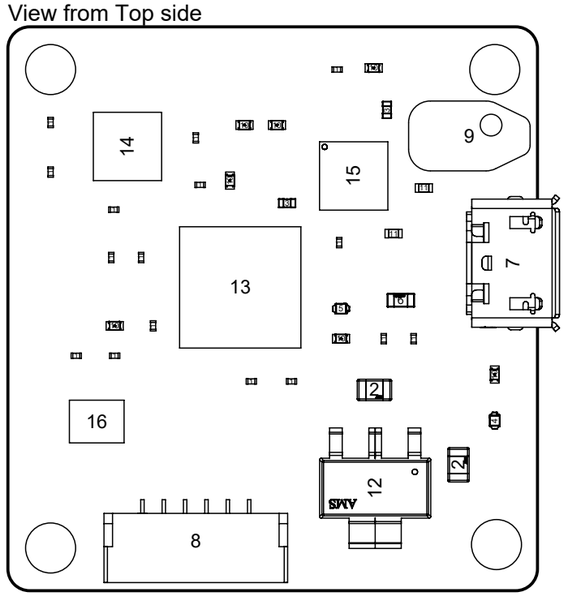

Drill Drawing View (Scale 2.7853:1)

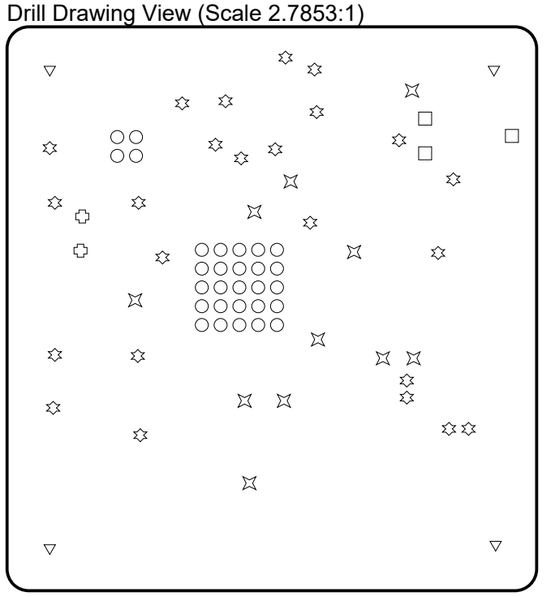

Drill Table

Symbol	Count	Hole Size	Plated	Hole Tolerance
○	29	0.20mm	Plated	
⌘	11	0.25mm	Plated	
✡	24	0.30mm	Plated	
✚	2	0.40mm	Plated	
□	3	1.02mm	Non-Plated	
▽	4	3.00mm	Plated	
	73 Total			