ASAIR

AGH Series Digital Temperature and Humidity Transmitter (RS485 Output) Datasheet

■ Product Summary

The digital temperature and humidity transmitter integrates a high-precision digital temperature and humidity sensor as its core measuring element, supplemented by a stable and reliable signal processing circuit. It can accurately measure the temperature and humidity parameters in the environment and convert them into a unified and standardized electrical signal output to ensure data accuracy and transmission stability.

■ Applications

It is widely used in meteorology, scientific research, post and telecommunications, tobacco, chemical industry, environmental protection, archives and cultural relics preservation, medical care, hotels, food and other occasions that need to measure and control air temperature and humidity.

■ Specifications

Relative humidity

The following parameters are all at 25℃ unless otherwise specified.

Measure range: 0 ~ 99.9%RH

Accuracy (including non-linearity, hysteresis and repeatability): ±3%RH

Response time: T63% < 8s

Resolution: 0.1%RH

Long-term stability: < 0.5%RH/year

Temperature

Measure range: -40 ~ 60℃

Accuracy ±0.5℃

Resolution:0.1℃

Long-term stability:< 0.1℃/year

Work environment

Work voltage: DC12V ~ 32V

Work temperature: -40 ~ 60℃

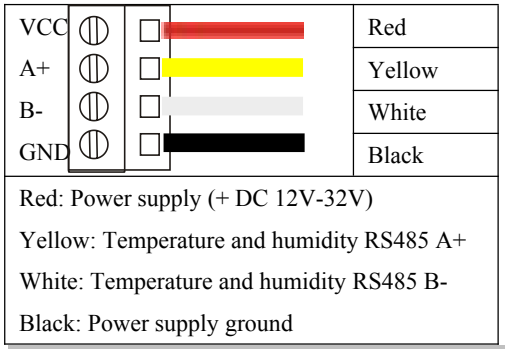

Work humidity: 0 ~ 99.9% non-condensation

Recommended storage temperature: 0 ~ 50℃

Recommended storage humidity: 20 ~ 60%RH

Power-on time: 3s

Product power consumption: <20mA (without output current at DC15V power supply)

Temperature and humidity output: Standard Modbus RTU

■ Model

Model NO.	Type	Dim(mm)
AGH1485	Wall-mounted	100*84*21
AGH3485	Pipeline	D16*200
AGH4485	Rail type	65*45*28.4

■ Electrical installation

All the following installation operations must be performed with the power supply disconnected.

The digital temperature and humidity transmitter uses a four-core connector, and the pin functions are shown in the figure below:

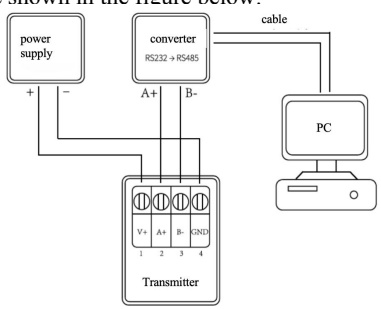

The functions of the connector pins are as follows:

■ Mechanical installation

1. The transmitter must be installed in a location that meets the typical temperature and humidity requirements of the environment being measured.
2. Ensure adequate space around the transmitter for air circulation.
3. Do not install directly on heating or cooling objects, or in environments with steam or water mist.
4. When installing cables, maintain a safe distance between the transmitter and the wiring, and ensure the transmitter is correctly installed according to the direction indicated on the transmitter housing.

■ Installation Procedure

1. Connect a 4-core (or shielded) cable to pins 1, 2, 3, and 4 of the transmitter (the shield of shielded cable should be connected to the power ground).
2. Connect the other end to the corresponding 485 converter (or other corresponding device) and power supply.
3.Fasten the front and rear housings of the transmitter securely (applicable to the AGH1485).
4.Check that the wiring is correct before connecting the power supply.

Pay attention to the grounding relationship between the test equipment and the transmitter.

■ Slave address and baud rate settings

1. Configure the device address using DIP switches 1-6. The maximum address value is 31.

For example, to set the device address to 7, turn DIP switches 1-3 to ON. Then, 0x01 + 0x02 +

0x04 = 0x07.

ID	1	2	3	4	5	6
1	ON	OFF	OFF	OFF	OFF	OFF
7	ON	ON	ON	OFF	OFF	OFF

2. Baud rate: Dial 7-8:

Baud rate	7	8
9600	OFF	OFF
19200	ON	OFF
38400	OFF	ON
115200	ON	ON

Note: Only AGH4485 supports the DIP switch setting function

Before setting the device parameters, please turn off the transmitter power.

■ RS485 communication protocol

This product uses the RS485 Modbus RTU standard protocol format. All operation and response commands are in hexadecimal format. The factory default device address is 1, and the default baud rate is 9600, 8, n, 1.

1. Query frame (hexadecimal), example:

To query a data value of device #1, the host computer sends the command:

Add	Function code	Start add	data length	check code
01	03	00 00	00 02	C4 0B

2. For a correct inquiry frame, the device will respond with data in the following format:

Add	Function code	data length	data 1 humidity	data 2 temperature	check code
01	03	04	0292	FF9B	5A3D

Data description

Temperature: When the temperature is below 0°C, the data is output in two's complement format:

FF9B H (hexadecimal) = 101 (decimal) → -10.1°C

Humidity: 0292 H (hexadecimal) = 658 (decimal) → 65.8% RH

3. Modifying the Slave Address and Baud Rate via 485 Communication

Note: The AGH1485, AGH3485, and AGH4485 all support software-controlled baud rate and slave address modification. The maximum address that can be set via software is 254. However, after a power cycle, the AGH4485 will restore the slave address and baud rate based on the hardware DIP switch settings.

Modify frame (hexadecimal), send example: To change the device's slave address to 2, the host computer sends the command:

Add	Function code	Add	Data	check code
01	06	00 66	00 02	E8 14

Modify the frame (hexadecimal), send example: change the baud rate to 4800bps, the host computer sends the command:

Add	Function code	Add	Data	check code
01	06	00 67	00 02	B9 D4

Please refer to the following table to set the baud rate:

Data	baud rate bps
1	2400
2	4800
3	9600
4	19200
5	38400
6	115200
other	9600

■ Dimension(unit:mm tolerance:±3mm)

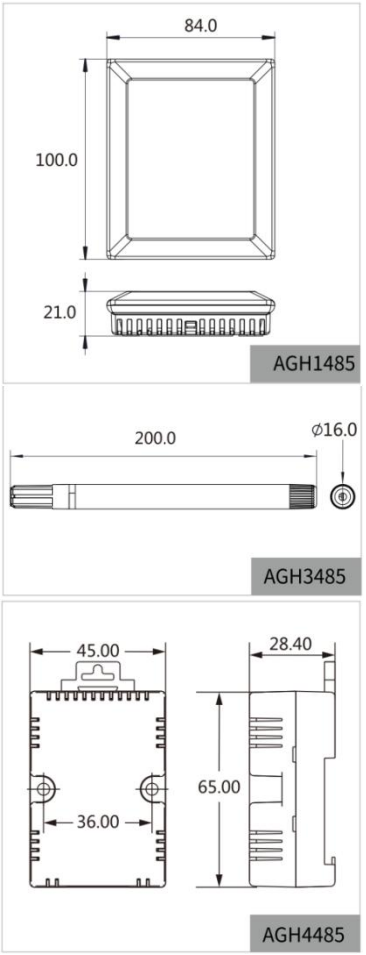

■ Sources of Error

Temperature Error

1. Too short a stabilization period in the test environment.

2. Too close to a heat source, cold source, or direct sunlight.

Humidity Error

1. Too short a stabilization period in the test environment.

2. Prolonged exposure to steam, water mist, or condensation.

Contamination

The product must be protected from dust or other pollutants.

■ License Agreement

No part of this manual may be reproduced in any form or by any means, electronic or mechanical (including photocopying), or communicated to any third party, without the prior written permission of the copyright holder. The contents of this manual are subject to change without notice.

The software is owned by our company and the third party. Users may use it only after signing a contract or software license.

■ Warning and Personal Injury

This product is strictly prohibited from use as a safety device or emergency stop device. Failure of such equipment could result in direct personal injury. This product is intended for use only in its intended purpose and authorized applications. Before use, please consult the product datasheet and application guide and strictly follow all operating instructions. Failure to strictly follow the operating instructions in this product manual could result in serious or even fatal personal injury. Furthermore, our company expressly disclaims any liability for any personal injury or death resulting from improper use or failure to follow these instructions, and waives any and all claims against its officers, employees, affiliated agents, distributors, etc. Please ensure that this product is used strictly in accordance with the instructions above to ensure your safety and avoid unnecessary risks. ■ Quality Guarantee

Our company provides a 12-month (one-year) quality warranty to direct purchasers of our products (starting from the date of shipment). This warranty is based on the technical specifications in the company's published product datasheets. If a product proves defective during the warranty period, our company will repair or replace it free of charge. This warranty requires the following conditions to be met:

① Notify our company in writing within 14 days of discovery of the defect.

② Return the product to our company at our expense.

③ The product must be within the warranty period.

Our company is only responsible for defects in products used in applications that meet the product's technical specifications. Our company makes no warranties, guarantees, or written representations regarding the suitability of our products for specific applications. Furthermore, our company makes no representations regarding the reliability of our products in products or circuits. We will not repair our products free of charge within the warranty period.