Pioneer sound.vision.soul

Service Manual

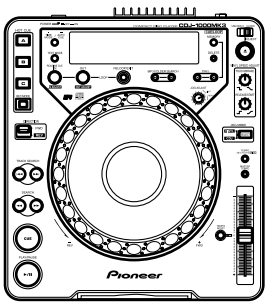

CDJ-1000MK3

ORDER NO.
RRV3353

COMPACT DISC PLAYER

CDJ-1000MK3

THIS MANUAL IS APPLICABLE TO THE FOLLOWING MODEL(S) AND TYPE(S).

Model	Type	Power Requirement	Remarks
CDJ-1000MK3	KUCXJ	AC 120V	
CDJ-1000MK3	WYXJ5	AC 220-240V	
CDJ-1000MK3	TLFXJ	AC 110-240V	

For details, refer to "Important Check Points for good servicing".

PIONEER CORPORATION 4-1, Meguro 1-chome, Meguro-ku, Tokyo 153-8654, Japan
PIONEER ELECTRONICS (USA) INC. P.O. Box 1760, Long Beach, CA 90801-1760, U.S.A.
PIONEER EUROPE NV Haven 1087, Keetberglaan 1, 9120 Melsele, Belgium
PIONEER ELECTRONICS ASIACENTRE PTE. LTD. 253 Alexandra Road, #04-01, Singapore 159936
ⒸPIONEER CORPORATION 2006

T-IZY APR. 2006 printed in Japan

SAFETY INFORMATION

This service manual is intended for qualified service technicians ; it is not meant for the casual do-it-yourselfer. Qualified technicians have the necessary test equipment and tools, and have been trained to properly and safely repair complex products such as those covered by this manual.
Improperly performed repairs can adversely affect the safety and reliability of the product and may void the warranty. If you are not qualified to perform the repair of this product properly and safely, you should not risk trying to do so and refer the repair to a qualified service technician.

WARNING
This product contains lead in solder and certain electrical parts contain chemicals which are known to the state of California to cause cancer, birth defects or other reproductive harm.

Health & Safety Code Section 25249.6 - Proposition 65

NOTICE
(FOR CANADIAN MODEL ONLY)
Fuse symbols (fast operating fuse) and/or (slow operating fuse) on PCB indicate that replacement parts must be of identical designation.

REMARQUE
(POUR MODÈLE CANADIEN SEULEMENT)
Les symboles de fusible (fusible de type rapide) et/ou (fusible de type lent) sur CCI indiquent que les pièces de remplacement doivent avoir la même désignation.

(FOR USA MODEL ONLY)

1. SAFETY PRECAUTIONS

The following check should be performed for the continued protection of the customer and service technician.

LEAKAGE CURRENT CHECK

Measure leakage current to a known earth ground (water pipe, conduit, etc.) by connecting a leakage current tester such as Simpson Model 229-2 or equivalent between the earth ground and all exposed metal parts of the appliance (input/output terminals, screwheads, metal overlays, control shaft, etc.). Plug the AC line cord of the appliance directly into a 120V AC 60 Hz outlet and turn the AC power switch on. Any current measured must not exceed 0.5 mA.

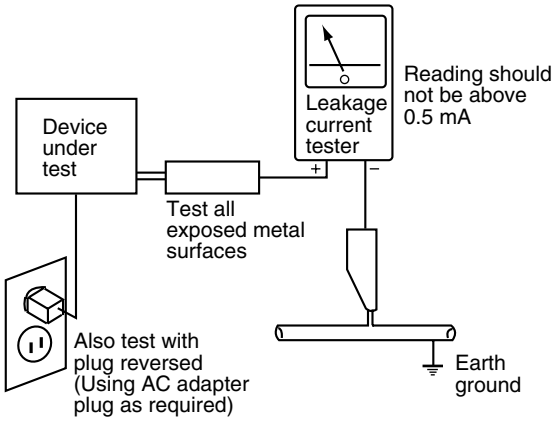

AC Leakage Test

ANY MEASUREMENTS NOT WITHIN THE LIMITS OUTLINED ABOVE ARE INDICATIVE OF A POTENTIAL SHOCK HAZARD AND MUST BE CORRECTED BEFORE RETURNING THE APPLIANCE TO THE CUSTOMER.

2. PRODUCT SAFETY NOTICE

Many electrical and mechanical parts in the appliance have special safety related characteristics. These are often not evident from visual inspection nor the protection afforded by them necessarily can be obtained by using replacement components rated for voltage, wattage, etc. Replacement parts which have these special safety characteristics are identified in this Service Manual.

Electrical components having such features are identified by marking with a ⚠ on the schematics and on the parts list in this Service Manual.
The use of a substitute replacement component which does not have the same safety characteristics as the PIONEER recommended replacement one, shown in the parts list in this Service Manual, may create shock, fire, or other hazards.

Product Safety is continuously under review and new instructions are issued from time to time. For the latest information, always consult the current PIONEER Service Manual. A subscription to, or additional copies of, PIONEER Service Manual may be obtained at a nominal charge from PIONEER.

IMPORTANT

THIS PIONEER APPARATUS CONTAINS LASER OF CLASS 1.
SERVICING OPERATION OF THE APPARATUS SHOULD BE DONE BY A SPECIALLY INSTRUCTED PERSON.

LASER DIODE CHARACTERISTICS

MAXIMUM OUTPUT POWER : 5 mW
WAVELENGTH : 780 – 785 nm

WARNING !

THE AEL (ACCESSIBLE EMISSION LEVEL) OF THE LASER POWER OUTPUT IS LESS THAN **CLASS 1** BUT THE LASER COMPONENT IS CAPABLE OF EMITTING RADIATION EXCEEDING THE LIMIT FOR **CLASS 1**.
A SPECIALLY INSTRUCTED PERSON SHOULD DO SERVICING OPERATION OF THE APPARATUS.

LABEL CHECK

for WYXJ5 and KUCXJ types

(DRW2308)

for TLFXJ type

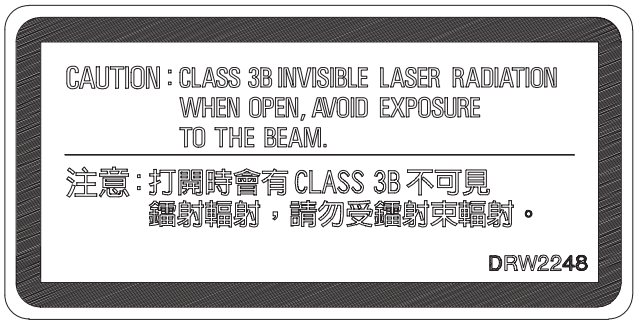

(DRW2248)

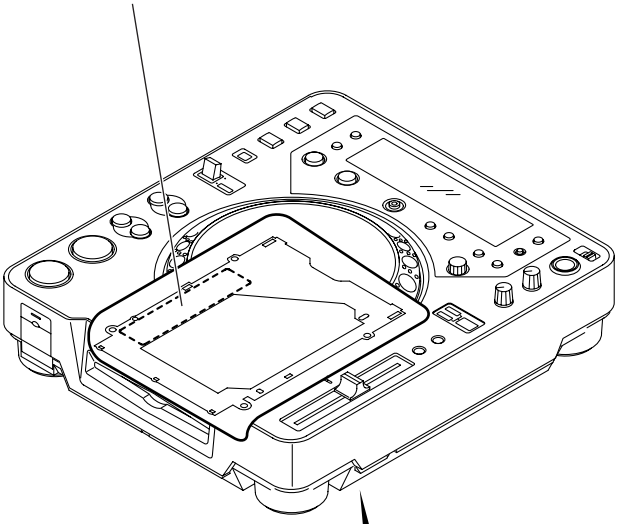

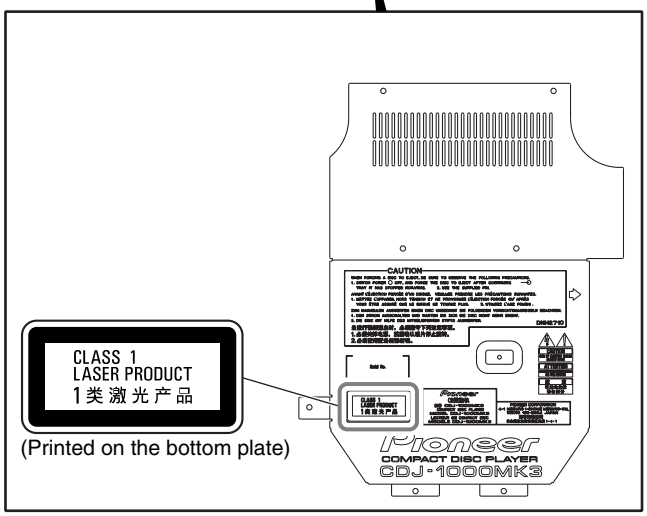

(Printed on the bottom plate)

Additional Laser Caution

1. Laser Interlock Mechanism
   The position of the switch (S2401) for detecting loading completion is detected by the system microprocessor, and the design prevents laser diode oscillation when the switch is not in LPS1 terminal side (when the mechanism is not clamped and LPS1 signal is high level.)
   Thus, the interlock will no longer function if the switch is deliberately set to LPS1 terminal side. (if LPS1 signal is low level).
   In the test mode∗ the interlock mechanism will not function. Laser diode oscillation will continue, if pin 5 of AN22022A (IC601) on the MAIN Assy is connected to GND, or else the terminals of Q603 are shorted to each other (fault condition).

2. When the cover is opened, close viewing of the objective lens with the naked eye will cause exposure to a Class 1 laser beam.

[Important Check Points for Good Servicing]

In this manual, procedures that must be performed during repairs are marked with the below symbol.
Please be sure to confirm and follow these procedures.

1. Product safety

Please conform to product regulations (such as safety and radiation regulations), and maintain a safe servicing environment by following the safety instructions described in this manual.

① Use specified parts for repair.

Use genuine parts. Be sure to use important parts for safety.

② Do not perform modifications without proper instructions.

Please follow the specified safety methods when modification(addition/change of parts) is required due to interferences such as radio/TV interference and foreign noise.

③ Make sure the soldering of repaired locations is properly performed.

When you solder while repairing, please be sure that there are no cold solder and other debris.
Soldering should be finished with the proper quantity. (Refer to the example)

④ Make sure the screws are tightly fastened.

Please be sure that all screws are fastened, and that there are no loose screws.

⑤ Make sure each connectors are correctly inserted.

Please be sure that all connectors are inserted, and that there are no imperfect insertion.

⑥ Make sure the wiring cables are set to their original state.

Please replace the wiring and cables to the original state after repairs.
In addition, be sure that there are no pinched wires, etc.

⑦ Make sure screws and soldering scraps do not remain inside the product.

Please check that neither solder debris nor screws remain inside the product.

⑧ There should be no semi-broken wires, scratches, melting, etc. on the coating of the power cord.

Damaged power cords may lead to fire accidents, so please be sure that there are no damages.
If you find a damaged power cord, please exchange it with a suitable one.

⑨ There should be no spark traces or similar marks on the power plug.

When spark traces or similar marks are found on the power supply plug, please check the connection and advise on secure connections and suitable usage. Please exchange the power cord if necessary.

⑩ Safe environment should be secured during servicing.

When you perform repairs, please pay attention to static electricity, furniture, household articles, etc. in order to prevent injuries.
Please pay attention to your surroundings and repair safely.

2. Adjustments

To keep the original performance of the products, optimum adjustments and confirmation of characteristics within specification.
Adjustments should be performed in accordance with the procedures/instructions described in this manual.

3. Lubricants, Glues, and Replacement parts

Use grease and adhesives that are equal to the specified substance.
Make sure the proper amount is applied.

4. Cleaning

For parts that require cleaning, such as optical pickups, tape deck heads, lenses and mirrors used in projection monitors, proper cleaning should be performed to restore their performances.

5. Shipping mode and Shipping screws

To protect products from damages or failures during transit, the shipping mode should be set or the shipping screws should be installed before shipment. Please be sure to follow this method especially if it is specified in this manual.

CONTENTS

1. SPECIFICATIONS 6
2. EXPLODED VIEWS AND PARTS LIST 8
   2.1 PACKING SECTION 8
   2.2 EXTERIOR SECTION 10
   2.3 CONTROL PANEL SECTION 12
   2.4 SLOT-IN MECHA. SECTION 14
   2.5 TRAVERSE MECHA. ASSY-S 16
3. BLOCK DIAGRAM AND SCHEMATIC DIAGRAM 18
   3.1 BLOCK DIAGRAM 18
      3.1.1 SIGNAL SECTION 18
      3.1.2 POWER SUPPLY SECTION 20
   3.2 OVERALL WIRING DIAGRAM 22
   3.3 MAIN ASSY (1/4) 24
   3.4 MAIN ASSY (2/4) 26
   3.5 MAIN ASSY (3/4) 28
   3.6 MAIN (4/4) and SLMB ASSYS 30
   3.7 SPCN, INSW and SDCB ASSYS 32
   3.8 MJCB ASSY 34
   3.9 MFLB ASSY 36
   3.10 SLDB and RSWB ASSYS 38
   3.11 JFLB, KSWB and JOGB ASSYS 40
   3.12 SW POWER SUPPLY ASSY 42
   3.13 WAVEFORMS 44
   3.14 VOLTAGES 53
4. PCB CONNECTION DIAGRAM 55
   4.1 MAIN ASSY 56
   4.2 SLMB, SPCN, INSW and SDCB ASSYS 60
   4.3 MJCB ASSY 62
   4.4 MFLB and RSWB ASSYS 64
   4.5 SLDB ASSY 68
   4.6 KSWB ASSY 69
   4.7 JFLB and JOGB ASSYS 70
   4.8 SW POWER SUPPLY ASSY 72
5. PCB PARTS LIST 73
6. ADJUSTMENT 77
   6.1 TEMPO ZERO POINT ADJUSTMENT 77
   6.2 MODE FOR CHECKING THE LOAD ON THE JOG DIAL 78
7. GENERAL INFORMATION 79
   7.1 DIAGNOSIS 79
      7.1.1 SERVICE MODE 79
      7.1.2 HOW TO UPGRADE THE SOFTWARE OF THE MICROCOMPUTER 87
      7.1.3 SEQUENCE 88
      7.1.4 DISASSEMBLY 90
   7.2 PARTS 99
      7.2.1 IC 99
8. PANEL FACILITIES 113
   8.1 PANEL SECTION 113
   8.2 DISPLAY SECTION 115

1. SPECIFICATIONS

1. General

System ..... Compact disc digital audio system
Power requirements ..... AC 120 V, 60 Hz (KUCXJ type)
AC 220 V to 240V, 50/60 Hz (WYXJ5 type)
AC 110 V to 240V, 50/60 Hz (TLFXJ type)
Power consumption ..... 28 W (KUCXJ type)
27 W (WYXJ5 type)
27 W (TLFXJ type)
Operating temperature ..... +5 ºC to +35 ºC
Operating humidity ..... 5 % to 85 %
(There should be no condensation of moisture.)
Weight ..... 4.2 kg (9.26 lb)
Dimensions ..... 320 (W) x 370 (D) x 105 (H) mm
12 - 5/8 (W) x 14 - 9/16 (D) x 4 - 1/8 (H) in

2. Audio section

Frequency response ..... 4 Hz to 20 kHz
Signal-to-noise ratio ..... 115 dB or more (JEITA)
Distortion ..... 0.006 % (JEITA)

3. Accessories

- Operating instructions 1
- Power cord (KUCXJ and WYXJ5 types) 1
- Power cord (TLFXJ type) 2
- Audio cable 1
- Control cord 1
- Forced eject pin
  (housed in a groove in the bottom panel) 1
- SD memory card 1
- Limited warranty (KUCXJ only)..... 1

NOTE:
Specifications and design are subject to possible modification without notice.

Accessories

Audio Cable
(VDE1064) L=1.5m

Control Cord
(XDE3063) L=1 m

Power Cord
(KUCXJ type : ADG7021)
(WYXJ5 : ADG1154)
(TLFXJ type : ADG1154, ADG7097)

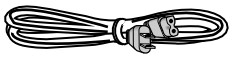

Forced Eject Pin
(DEX1013)

SD Memory Card
(DWX2622)

AC power cord for TLFXJ type

The type of cord which can be used depends on the power voltage in each region or country. Please make sure you use the correct cord due to the possibility of fire or other hazard if used incorrectly (see below).

AC power cord and converter plug use

Region	Plug type
ADG1154 For European type region **Caution** Do not use this power cord set in Taiwan.	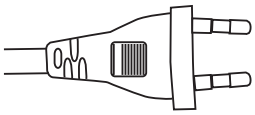 **European two-pin plug**
ADG7097 For Taiwan exclusively **Caution** For use in Taiwan only. In other areas, please do not use.	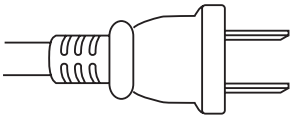 **Taiwanese two-pin flat-bladed plug**

A

B

C

D

E

F

2. EXPLODED VIEWS AND PARTS LIST

NOTES:
- *Parts marked by "NSP" are generally unavailable because they are not in our Master Spare Parts List.*
- *The ⚠ mark found on some component parts indicates the importance of the safety factor of the part. Therefore, when replacing, be sure to use parts of identical designation.*
- *Screws adjacent to ▼ mark on product are used for disassembly.*
- *For the applying amount of lubricants or glue, follow the instructions in this manual. (In the case of no amount instructions, apply as you think it appropriate.)*

2.1 PACKING SECTION

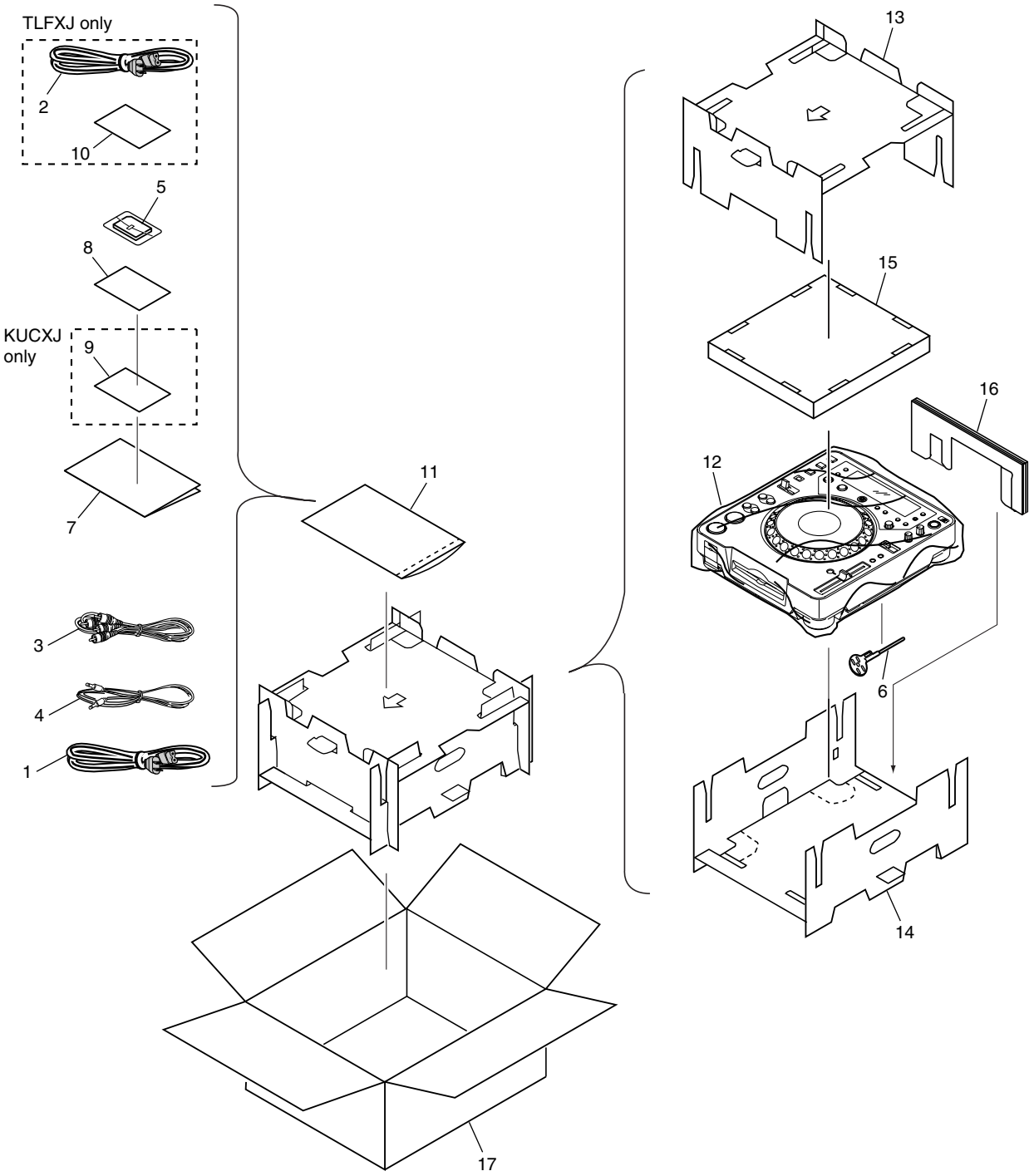

(1) PACKING SECTION PARTS LIST

Mark	No.	Description	Part No.
⚠	1	Power Cord	See Contrast table (2)
⚠	2	Power Cord	See Contrast table (2)
	3	Audio Cable (L = 1.5 m)	VDE1064
	4	Control Cord (L = 1 m)	XDE3063
	5	SD Memory Card	DWX2622
	6	Forced Eject Pin	DEX1013
	7	Operating Instructions	See Contrast table (2)
NSP	8	User Seat	DRM1262
NSP	9	Limited Warranty	See Contrast table (2)
	10	Caution Card SB	See Contrast table (2)
NSP	11	Polyethylene Bag (0.06 x 230 x 340)	AHG7117
	12	Packing Sheet	AHG7010
	13	Pad (A)	DHA1533
	14	Pad (B)	DHA1534
	15	Pad (C)	DHA1535
	16	Pad (D)	DHA1536
	17	Packing Case	See Contrast table (2)

(2) CONTRAST TABLE

CDJ-1000MK3/KUCXJ, WYXJ5 and TLFXJ are constructed the same except for the following:

Mark	No.	Symbol and Description	CDJ-1000MK3/KUCXJ	CDJ-1000MK3/WYXJ5	CDJ-1000MK3/TLFXJ
⚠	1	Power Cord	ADG7021	ADG1154	ADG1154
⚠	2	Power Cord	Not used	Not used	ADG7097
	7	Operating Instructions (English)	DRB1397	Not used	Not used
	7	Operating Instructions (English/French/German/Italian/Duch/Spanish)	Not used	DRB1396	Not used
	7	Operating Instructions (English/ Spanish/ Chinese)	Not used	Not used	DRB1398
NSP	9	Limited Warranty	ARY7043	Not used	Not used
	10	Caution Card SD	Not used	Not used	ARM7064
	17	Packing Case	DHG2576	DHG2575	DHG2577

2.2 EXTERIOR SECTION

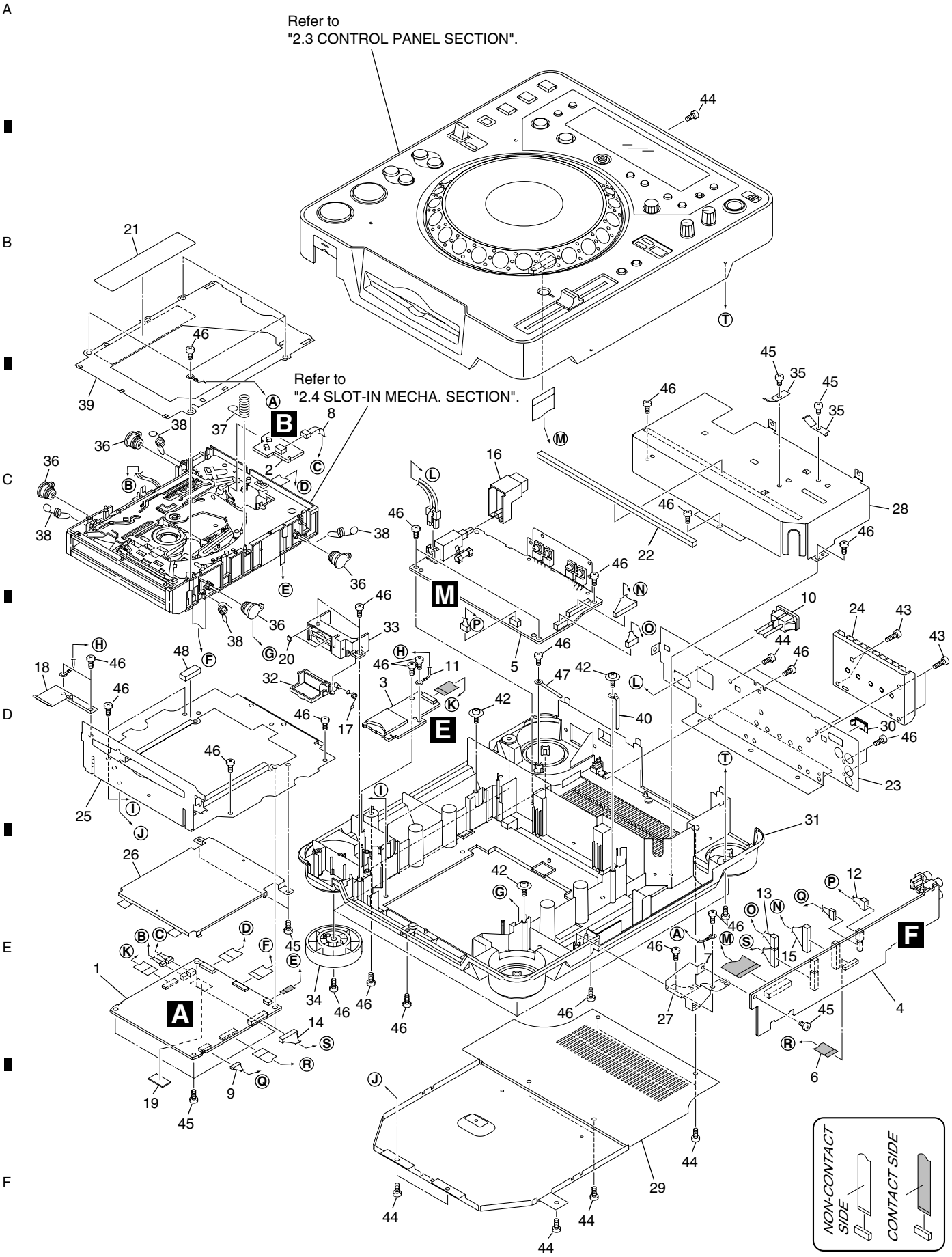

(1) EXTERIOR SECTION PARTS LIST

Mark	No.	Description	Part No.
	1	MAIN Assy	DWG1591
	2	SLMB Assy	DWS1366
	3	SDCB Assy	DWX2558
	4	MJCB Assy	DWG1605
⚠	5	SW POWER SUPPLY Assy	DWR1409
	6	15P Flexible Cable	DDD1301
	7	Earth Lead Unit/300V	DDF1032
	8	Connector Assy 3P	DKP3751
	9	Connector Assy 6P	DKP3752
⚠	10	Inlet Assy	See Contrast table (2)
	11	Earth Lead Unit/300V	PDF1104
	12	Connector Assy	PF04PP-Q12
	13	Connector Assy	PF06PP-Q15
	14	Connector Assy	PF09PP-B12
	15	Connector Assy	PF11EE-R15
	16	Power Button	DAC2314
	17	Door Spring	DBH1565
	18	Card Spring	DBK1295
NSP	19	Silicone Sheet D5 L	DEB1456
	20	Door Cushion	DEB1780
	21	Laser Caution	See Contrast table (2)
	22	Dust Guard	DEC2939
NSP	23	Rear Panel	See Contrast table (2)
	24	Heatsink	DNG1099
	25	PCB Stay	DNH2711
	26	Shield Case	DNH2712
	27	Earth Plate C	DNH2715
	28	Shield Box	DNH2728
	29	Bottom Plate	See Contrast table (2)
	30	Blind Cap	DNK4218
	31	Chassis	DNK4553
	32	Card Door	DNK4554
	33	Card Holder	DNK4555
	34	Insulator Assy	DXA2092
	35	Earth Plate	VBK1070
	36	Damper	CNV6011
	37	Earth Spring	DBH1398
	38	Float Spring G5	DBH1494
	39	Mecha. Plate	DNH2339
	40	Cord Clamper	RNH-184
	41	Binder (SKB-90BK)	ZCA-SKB90BK
	42	DM Screw	DBA1260
	43	Screw	BBT30P100FTB
	44	Screw	BBZ30P060FTB
	45	Screw	BBZ30P060FTC
	46	Screw	BPZ30P080FTB
NSP	47	Cord Clamper (069Z)	ZCB-069Z
	48	FFC Guard	DEC2586

(2) CONTRAST TABLE

CDJ-1000MK3/KUCXJ, WYXJ5 and TLFXJ are constructed the same except for the following:

Mark	No.	Symbol and Description	CDJ-1000MK3/KUCXJ	CDJ-1000MK3/WYXJ5	CDJ-1000MK3/TLFXJ
⚠	10	Inlet Assy	DKP3754	DKP3753	DKP3753
	21	Laser Caution (7L)	DRW2308	DRW2308	Not used
	21	Laser Caution	Not used	Not used	DRW2248
NSP	23	Rear Panel	DNC1765	DNC1758	DNC1766
	29	Bottom Plate	DNH2710	DNH2710	DNH2732

2.3 CONTROL PANEL SECTION

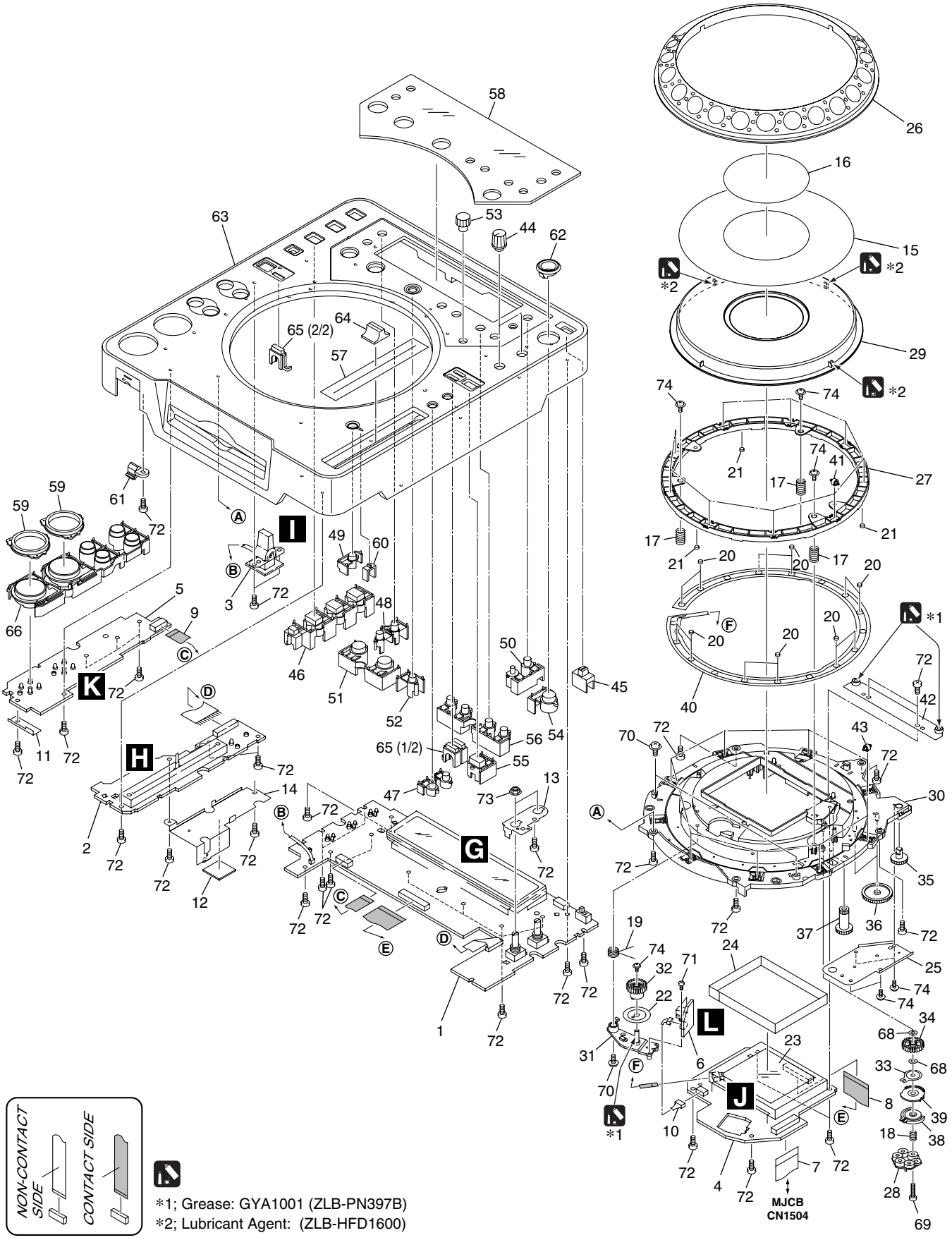

CONTROL PANEL SECTION PARTS LIST

Mark No.	Description	Part No.
1	MFLB Assy	DWG1606
2	SLDB Assy	DWS1367
3	RSWB Assy	DWS1368
4	JFLB Assy	DWG1602
5	KSWB Assy	DWS1365
6	JOGB Assy	DWG1603
7	22P Flexible Cable	DDD1302
8	25P Flexible Cable	DDD1303
9	10P Flexible Cable	DDD1304
10	Connector Assy	PF04PP-B07
11	LED Guard	DEC2932
12	Protect Cushion	DEC2938
13	VR Stay	DNF1663
14	Earth Plate P	DNH2714
15	JOG Plate	DAH2052
16	JOG Panel	DAH2182
17	SW Spring 25	DBH1514
18	Gear Spring 200	DBH1525
19	Arm Spring	DBH1566
20	SW Cushion HH48/2	DEC2538
21	Ring Cushion L24/2.0	DEC2958
22	Encoder Plate	DEC2889
23	Protect Sheet	DEC2945
24	FL Sheet	DEC2946
25	Gear Plate	DNH2713
26	JOG B	DNK4068
27	SW Ring	DNK4070
28	Adjust Plate	DNK4178
29	JOG A	DNK4556
30	JOG Holder 1000	DNK4558
31	Gear Arm	DNK4559
32	Gear	DNK4560
33	Smoother	DNK4561
34	Gear A	DNK4562
35	Joint Gear 1	DNK4563
36	Joint Gear 2	DNK4564
37	Joint Gear 3	DNK4565
38	Compressor Plate	DNK4566
39	Cam Plate	DNK4567
40	Sheet SW	DSX1065
41	Roller A Assy	DXB1825
42	JOG Stay Assy	DXB1876
43	Roller B Asssy	DXB1877
44	Rotary Knob C	DAA1194
45	Slide SW Knob	DAC1926

Mark No.	Description	Part No.
46	Set Knob (HS)	DAC1986
47	Set Knob (MT)	DAC1987
48	Set Knob (TIME)	DAC1991
49	Tempo Reset Knob	DAC1993
50	Set Knob (MEMO)	DAC1994
51	Set Knob (LOOP)	DAC1995
52	Re-Loop Button	DAC2347
53	Adjust Knob	DAC2350
54	Eject Knob	DAC2365
55	Mode Select Knob	DAC2366
56	Set Knob (SC)	DAC2368
57	Slide Sheet 1C	DAH2404
58	Display Panel	DAH2435
59	Ring Lens	DNK3880
60	Tempo Lens	DNK3882
61	Card Lens	DNK3885
62	Eject Guard	DNK3958
63	Control Panel	DNK4568
64	Slide Knob	DNK4656
65	Mode Lens	DNK4701
66	Set Knob (PLAY) Assy	DXB1909
67	•••••	
68	Washer	WA52D120D25
69	Screw	BPZ20P100FTC
70	Screw	IPZ30P100FTC
71	Screw	BPZ20P060FTC
72	Screw	BPZ30P080FTB
73	Flange Nut M9	DBN1008
74	Screw	DBA1265

2.4 SLOT-IN MECHA. SECTION

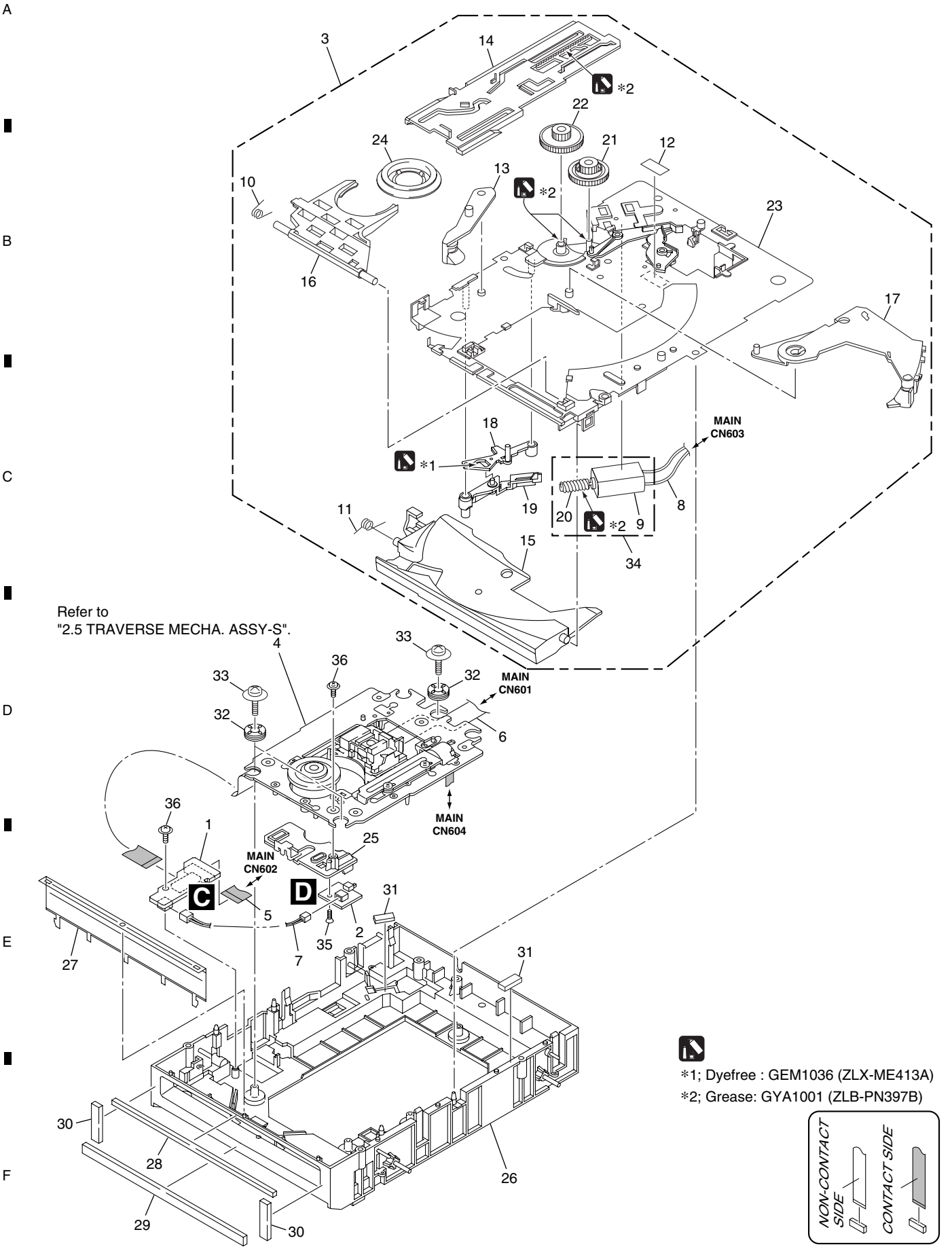

*1; Dyefree : GEM1036 (ZLX-ME413A)

*2; Grease: GYA1001 (ZLB-PN397B)

SLOT-IN MECHA. SECTION PARTS LIST

Mark	No.	Description	Part No.
	1	SPCN Assy	DWX2559
	2	INSW Assy	DWS1369
NSP	3	Slot-in Mecha. G11 Assy	DXA2068
	4	Traverse Mecha. Assy-S	DXX2566
	5	13P Flexible Cable	DDD1299
	6	26P Flexible Cable	DDD1300
	7	Connector Assy 2P	DKP3769
	8	Connector Assy 2P	DKP3750
NSP	9	DC Motor S	DXM1230
	10	Clamp Spring	DBH1374
	11	Guide Spring	DBH1375
	12	SW Lever Spacer	DEC2420
	13	Drive Lever	DNK3406
	14	Main Cam	DNK3407
	15	Disc Guide	DNK3478
	16	Clamp Arm	DNK3576
	17	Eject Lever	DNK3684
	18	Lever AP	DNK3835
	19	Lever BP	DNK3836
NSP	20	Worm Gear	DNK3910
	21	Loading Gear	DNK3911
	22	Drive Gear	DNK3912
	23	Loading Base Assy-S	DEA1022
	24	Clamper D4 Assy	DXA2043
	25	Inside SW Base	DNK4236
	26	Float Base G11 Assy	DXB1793
	27	Front Sheet	DED1132
	28	Vessel Cushion A	DEC2852
	29	Vessel Cushion B	DEC2853
	30	Vessel Cushion C	DEC2854
	31	Spacer POR (T3)	DEB1566
	32	Float Rubber D3	DEB1404
	33	Float Screw	DBA1286
	34	Loading Motor Assy-S	DEA1008
	35	Screw 2 x 5	VBA1062
	36	Screw	IPZ20P060FTC

2.5 TRAVERSE MECHA. ASSY-S

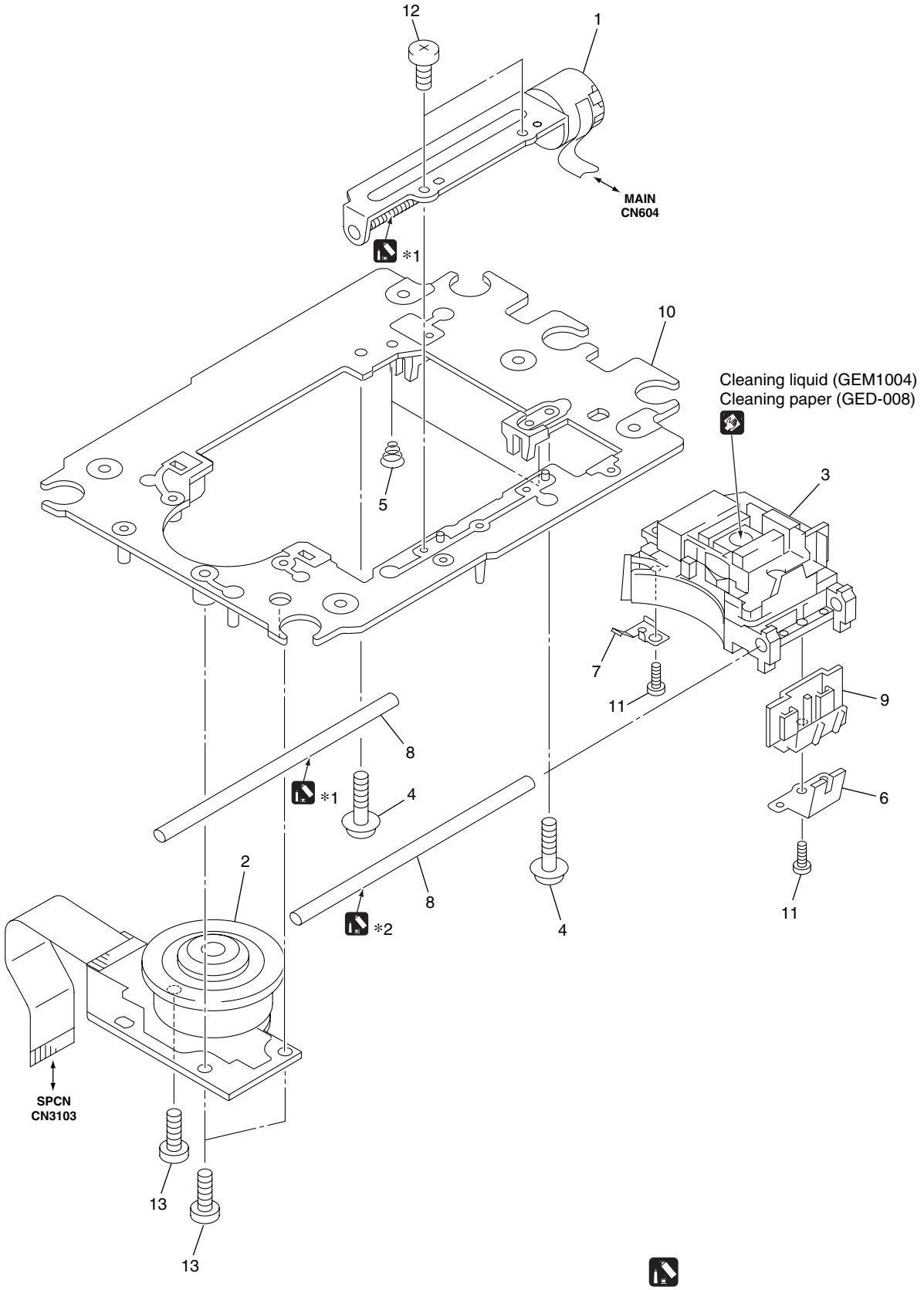

*1; Grease: GYA1001 (ZLB-PN397B)

*2; Grease: GEM1007 (ZLB-PN948P)

TRAVERSE MECHA. ASSY-S PARTS LIST

Mark	No.	Description	Part No.
NSP	1	Stepping Motor	DXM1227
NSP	2	Spindle Motor G11	DXM1231
NSP	3	04RM2 Pickup Assy R	OWY8071
NSP	4	Skew Screw	DBA1263
NSP	5	Skew Spring	DBH1437
NSP	6	Joint Spring (J)	DBK1261
NSP	7	Slider Spring G11 (J)	DBK1262
NSP	8	Guide Shaft (S)	DLA1918
	9	Joint	DNK3858
NSP	10	Mounting Plate G11 (J)	DNK4307
	11	Screw 04	VBA1092
	12	Screw	BPZ20P080FTC
	13	Screw	BPZ26P080FTC

3. BLOCK DIAGRAM AND SCHEMATIC DIAGRAM

3.1 BLOCK DIAGRAM

3.1.1 SIGNAL SECTION

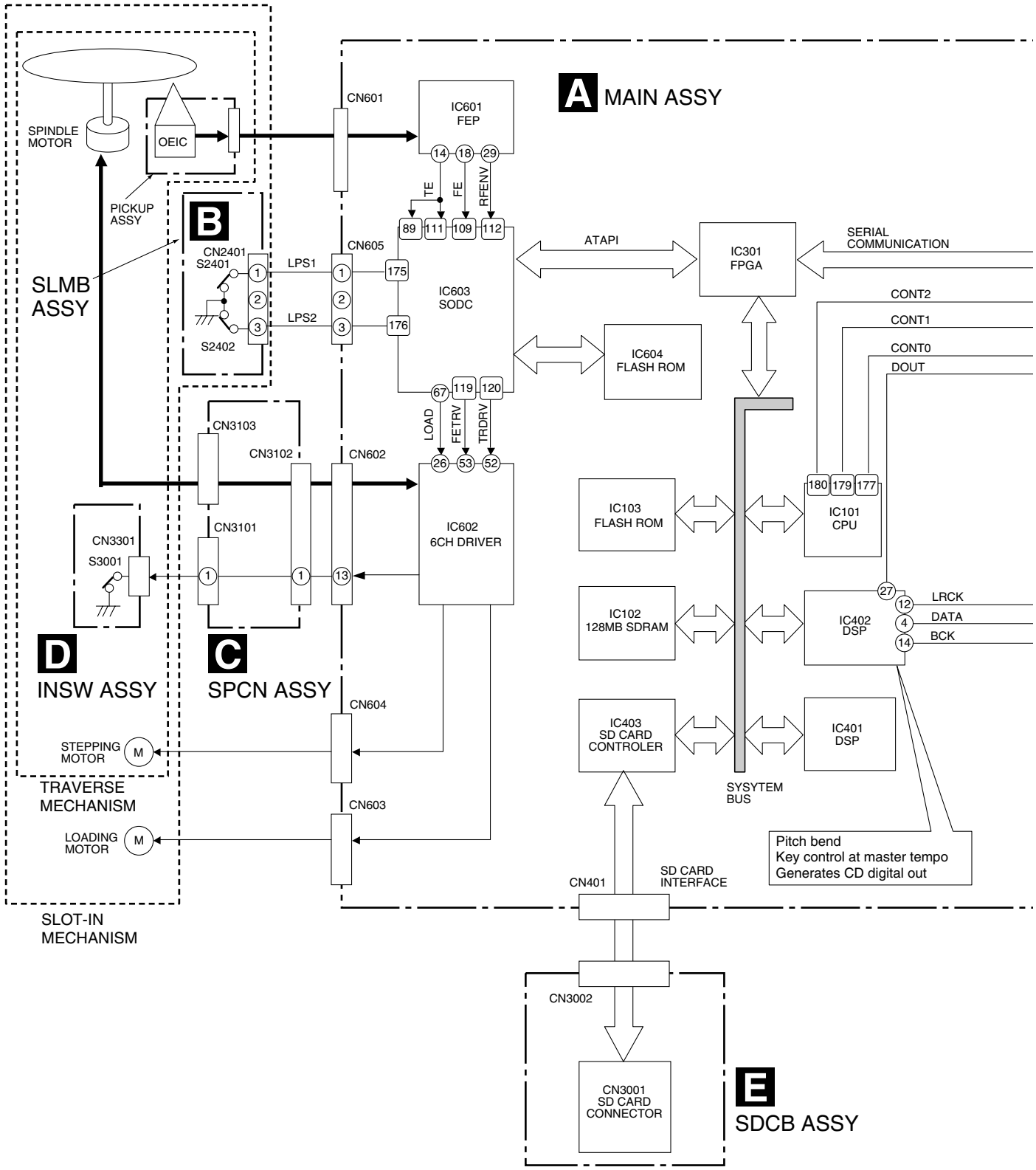

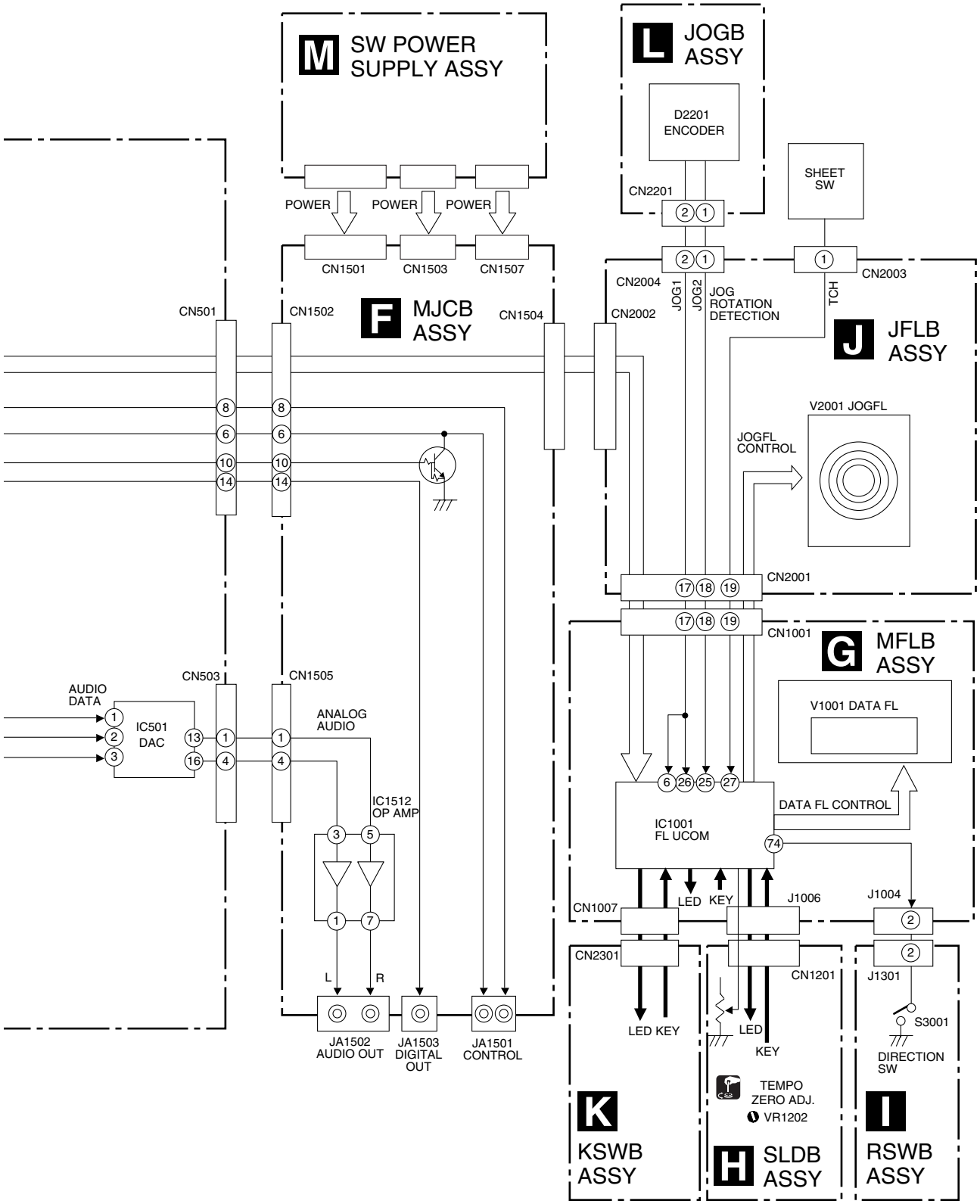
M SW POWER SUPPLY ASSY
POWER
POWER
POWER
CN1501
CN1503
CN1507
L JOGB ASSY
D2201 ENCODER
CN2201
SHEET SW
CN2004
CN2003
JOG1
JOG2
JOG ROTATION DETECTION
TCH
CN501
CN1502
F MJCB ASSY
CN1504
CN2002
J JFLB ASSY
V2001 JOGFL
JOGFL CONTROL
CN2001
CN1001
G MFLB ASSY
V1001 DATA FL
CN503
CN1505
AUDIO DATA
IC501 DAC
ANALOG AUDIO
IC1512 OP AMP
IC1001 FL UCOM
DATA FL CONTROL
LED
KEY
CN1007
J1006
J1004
CN2301
CN1201
J1301
L
R
LED KEY
LED
KEY
S3001
DIRECTION SW
TEMPO ZERO ADJ.
VR1202
JA1502 AUDIO OUT
JA1503 DIGITAL OUT
JA1501 CONTROL
K KSWB ASSY
H SLDB ASSY
I RSWB ASSY

3.1.2 POWER SUPPLY SECTION

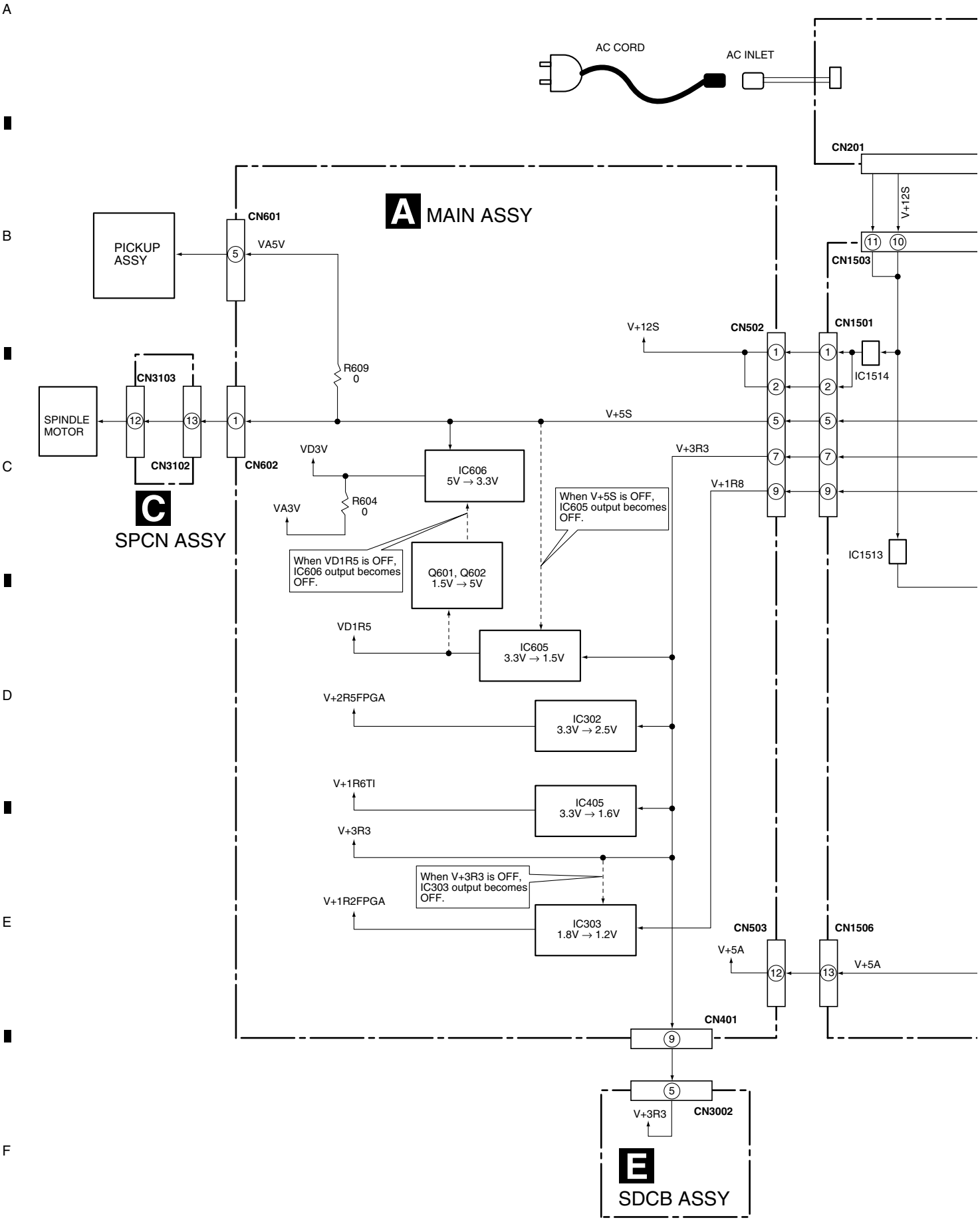

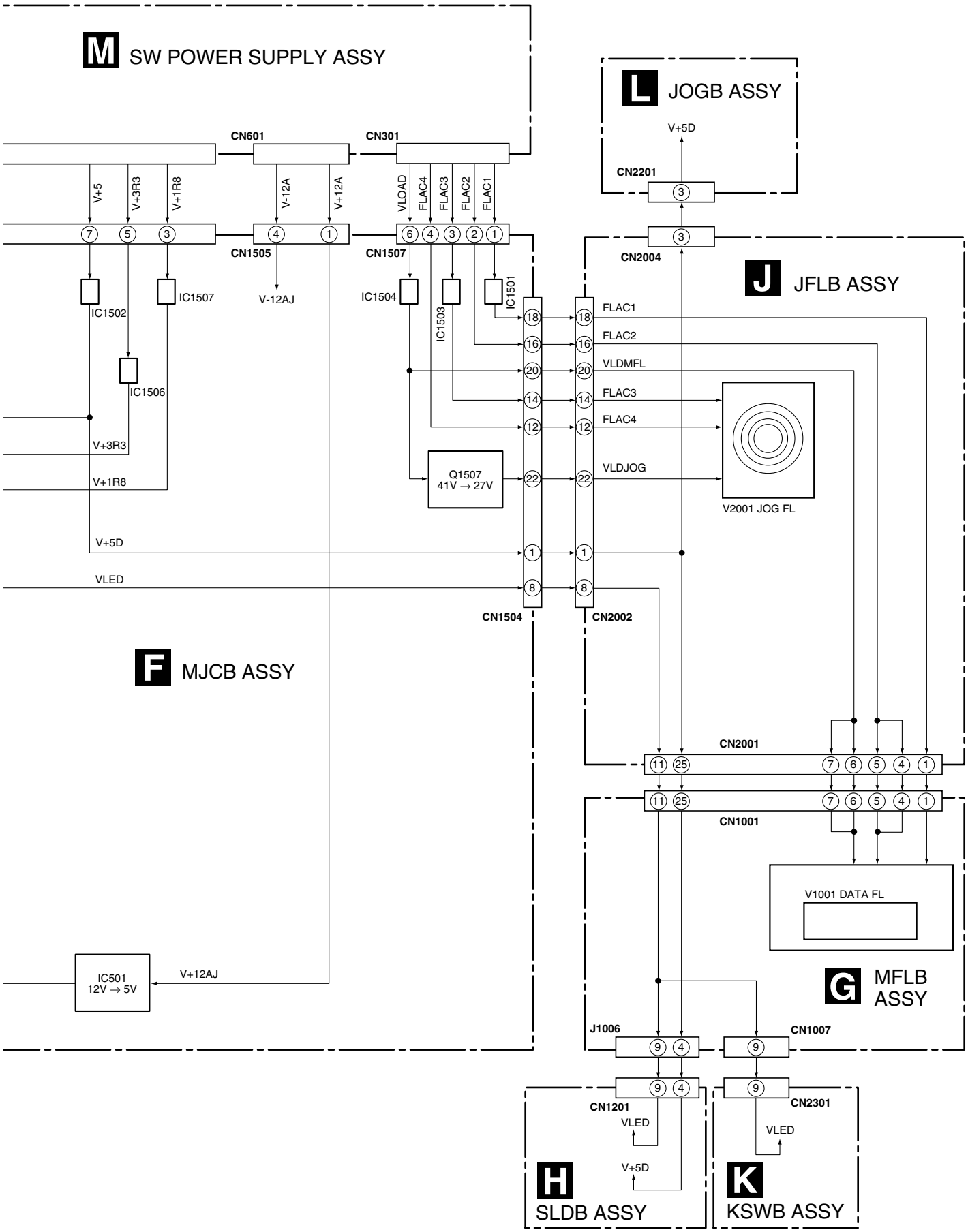
M SW POWER SUPPLY ASSY
L JOGB ASSY
V+5D
CN2201
CN601
CN301
V+5
V+3R3
V+1R8
V-12A
V+12A
VLOAD
FLAC4
FLAC3
FLAC2
FLAC1
CN1505
CN1507
CN2004
J JFLB ASSY
IC1502
IC1507
V-12AJ
IC1504
IC1501
IC1503
IC1506
FLAC1
FLAC2
VLDMFL
FLAC3
FLAC4
VLDJOG
V+3R3
V+1R8
Q1507
41V → 27V
V2001 JOG FL
V+5D
VLED
CN1504
CN2002
F MJCB ASSY
CN2001
CN1001
V1001 DATA FL
IC501
12V → 5V
V+12AJ
G MFLB ASSY
J1006
CN1007
CN1201
CN2301
VLED
VLED
V+5D
H SLDB ASSY
K KSWB ASSY

3.2 OVERALL WIRING DIAGRAM

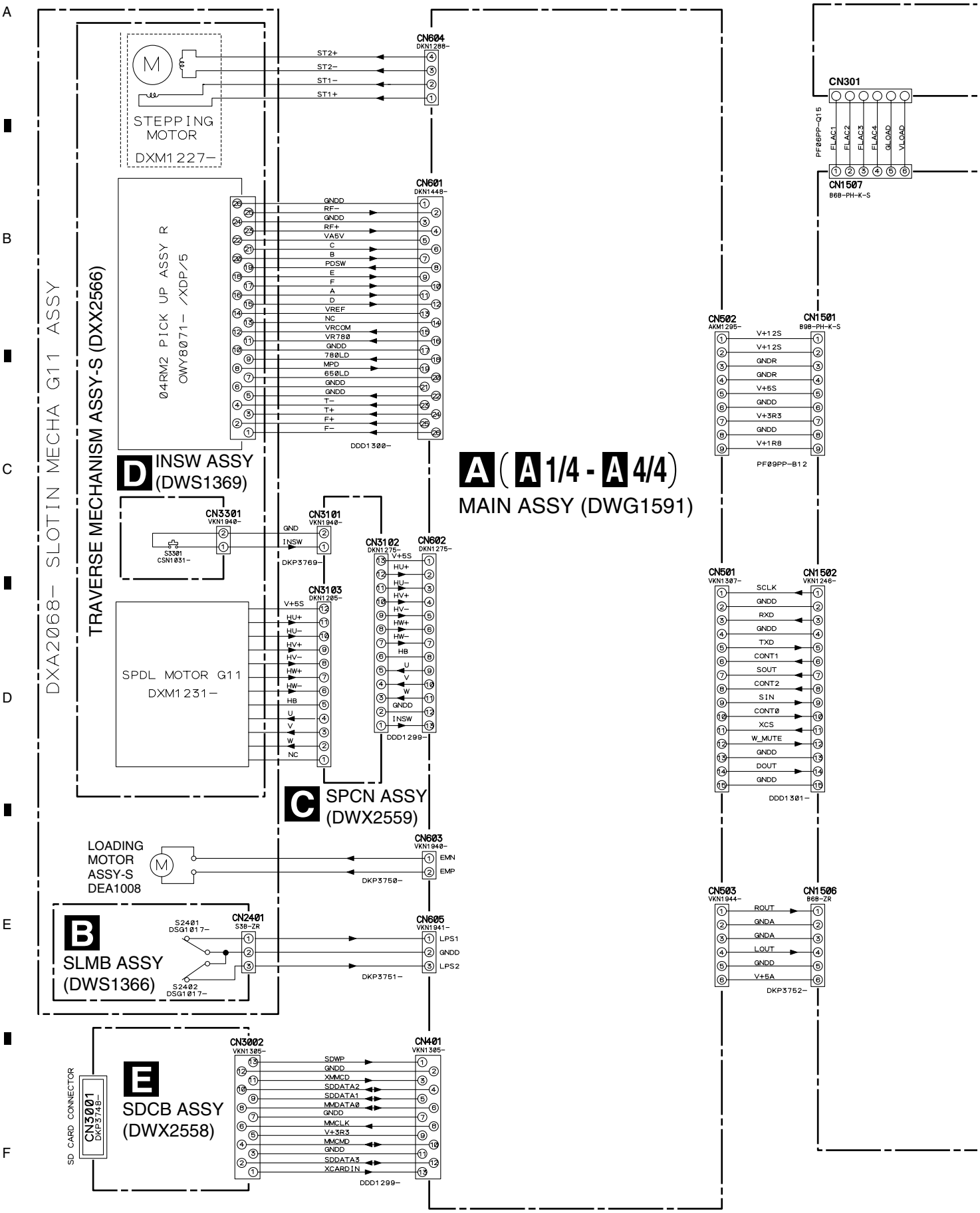

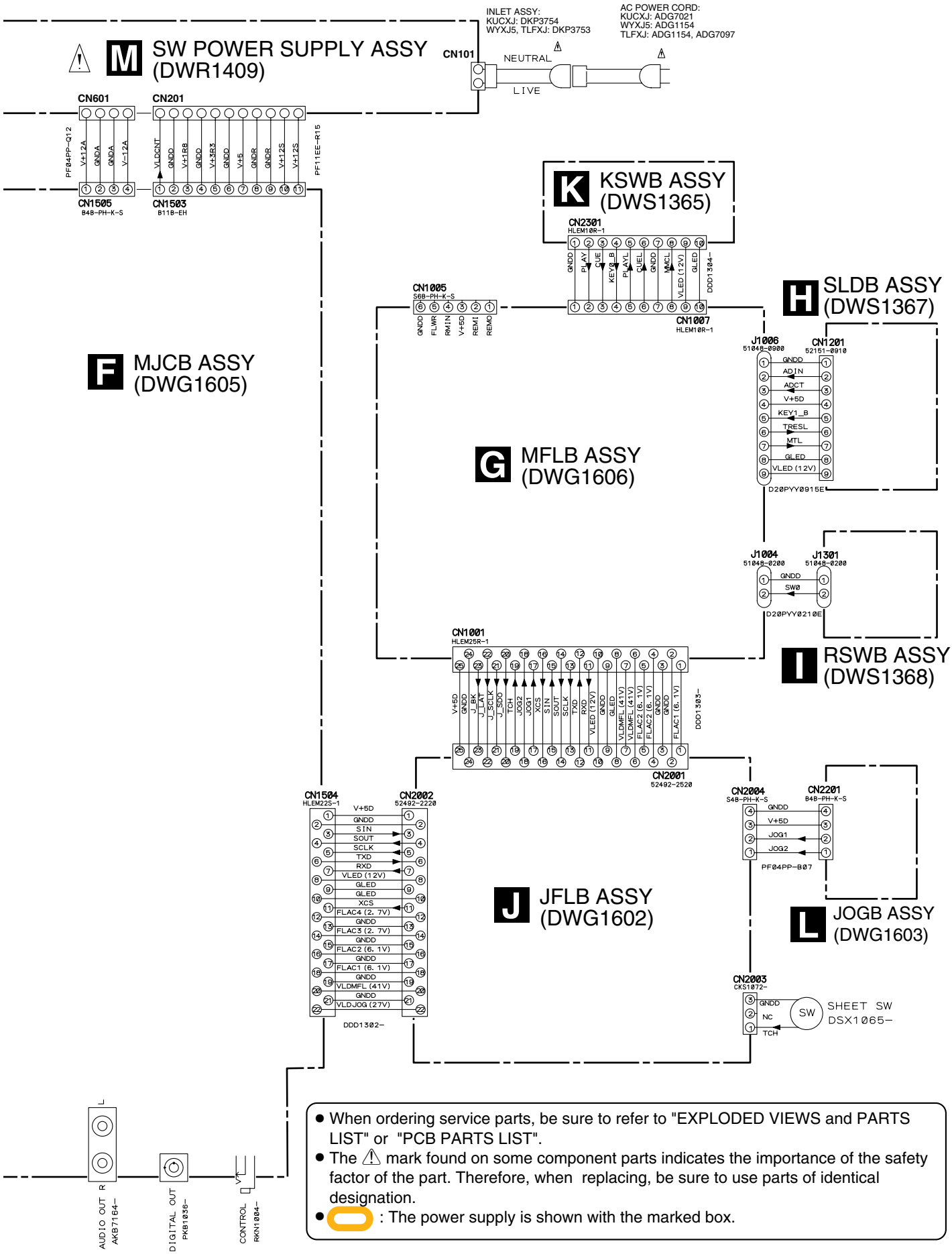

- When ordering service parts, be sure to refer to "EXPLODED VIEWS and PARTS LIST" or "PCB PARTS LIST".
- The ⚠ mark found on some component parts indicates the importance of the safety factor of the part. Therefore, when replacing, be sure to use parts of identical designation.
- : The power supply is shown with the marked box.

3.3 MAIN ASSY (1/4)

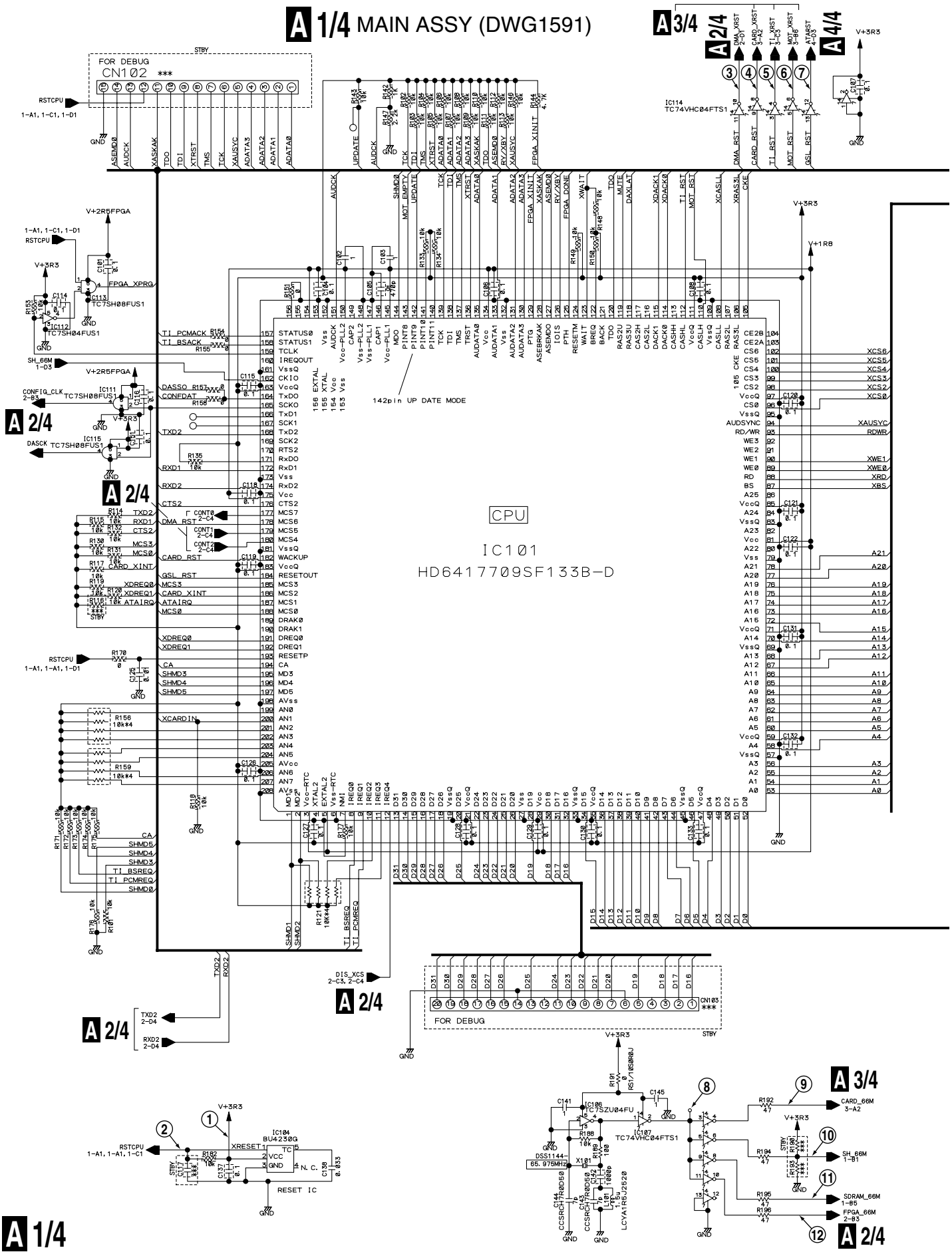

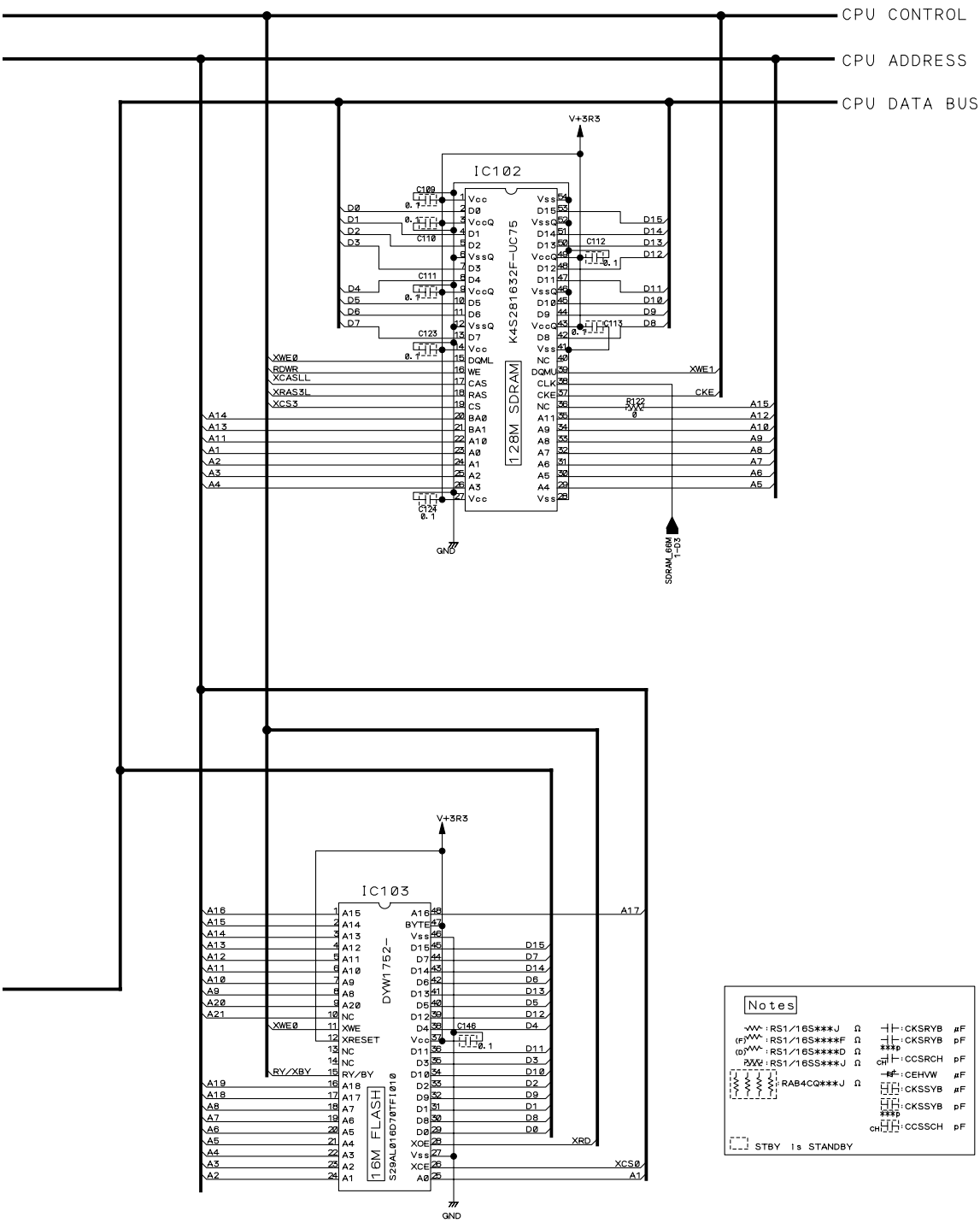
CPU CONTROL BUS
CPU ADDRESS BUS
CPU DATA BUS
A 2/4, 3/4, 4/4
IC102
K4S281632F-UC75
128M SDRAM
V+3R3
GND
SDRAM_66M
IC103
DYW1752-
16M FLASH
S29AL016D70TF1010
Notes
STBY : STANDBY

A 1/4

A 2/4 MAIN ASSY (DWG1591)

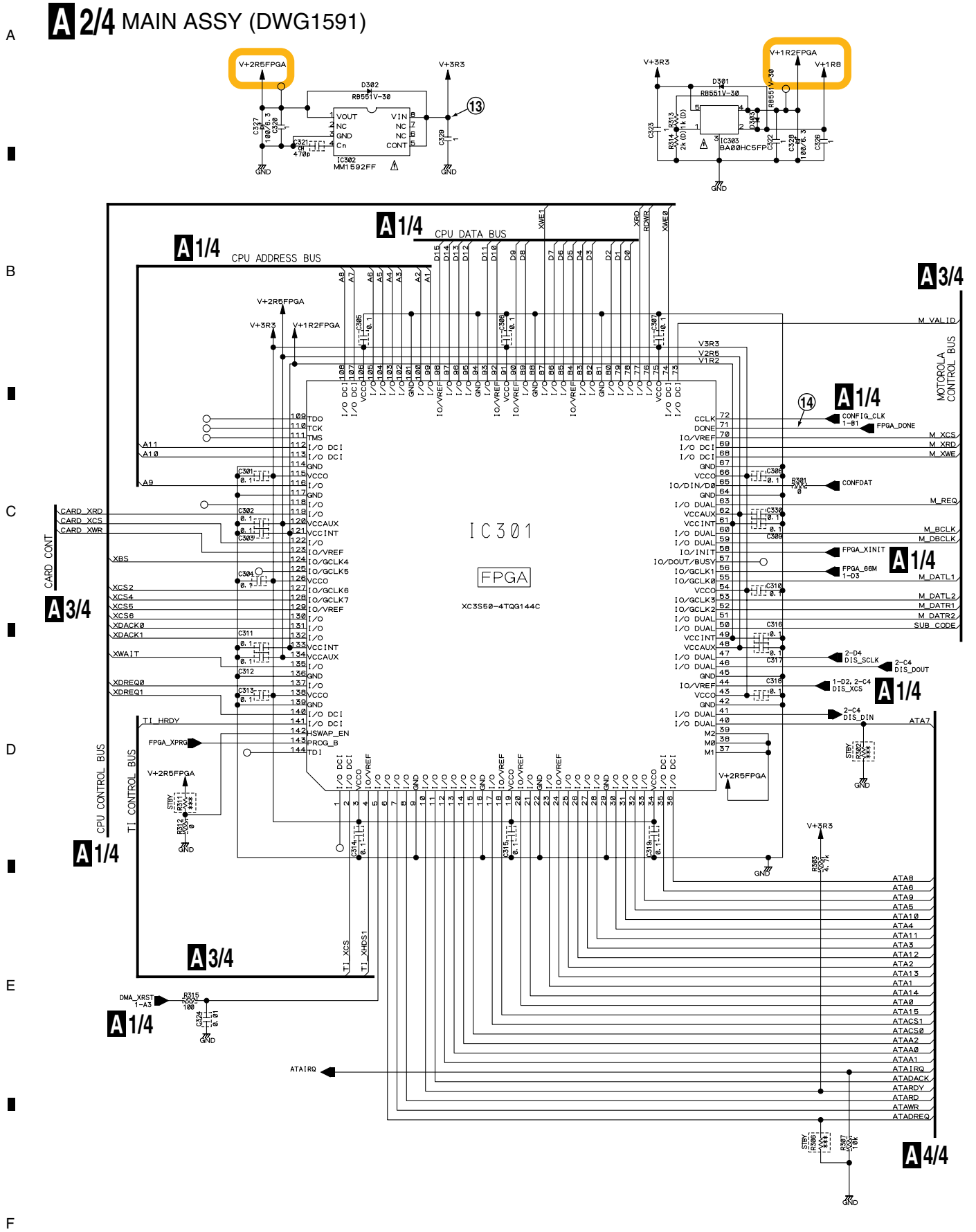

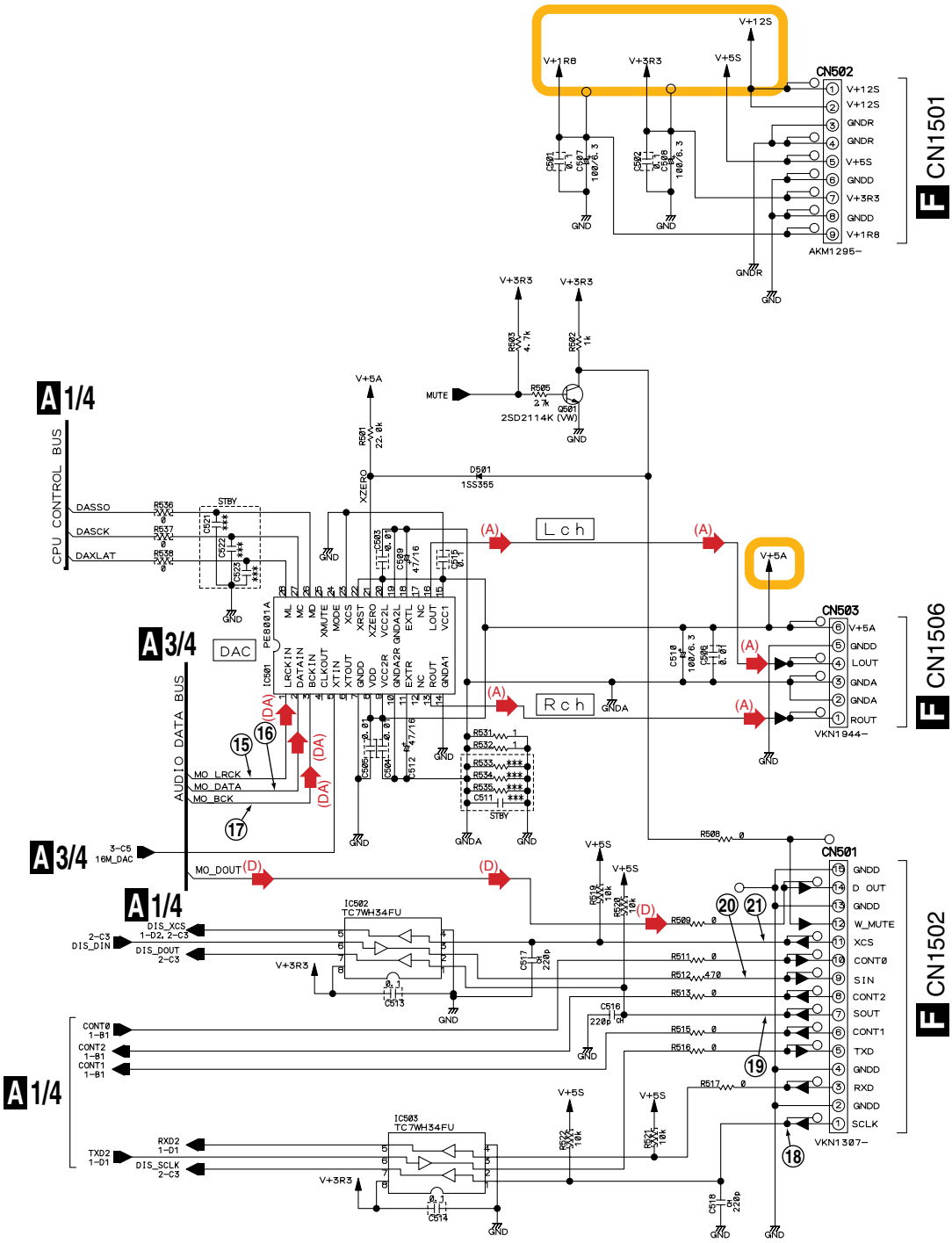

Notes

	:RS1/16S***J	Ω		:CKSRYB	μF
(F)	:RS1/16S****F	Ω		:CKSRYB	pF
(D)	:RS1/16S****D	Ω	***p		
	:RS1/16SS***J	Ω	CH	:CCSRCH	pF
	:RAB4CQ***J	Ω		:CEHVW	μF
				:CKSSYB	μF
				:CKSSYB	pF
			***p		
			CH	:CCSSCH	pF

STBY is STANDBY

(DA) : Audio Data Signal Route

(A) : Analog Audio Signal Route

(D) : Digital Out Signal Route

3.5 MAIN ASSY (3/4)

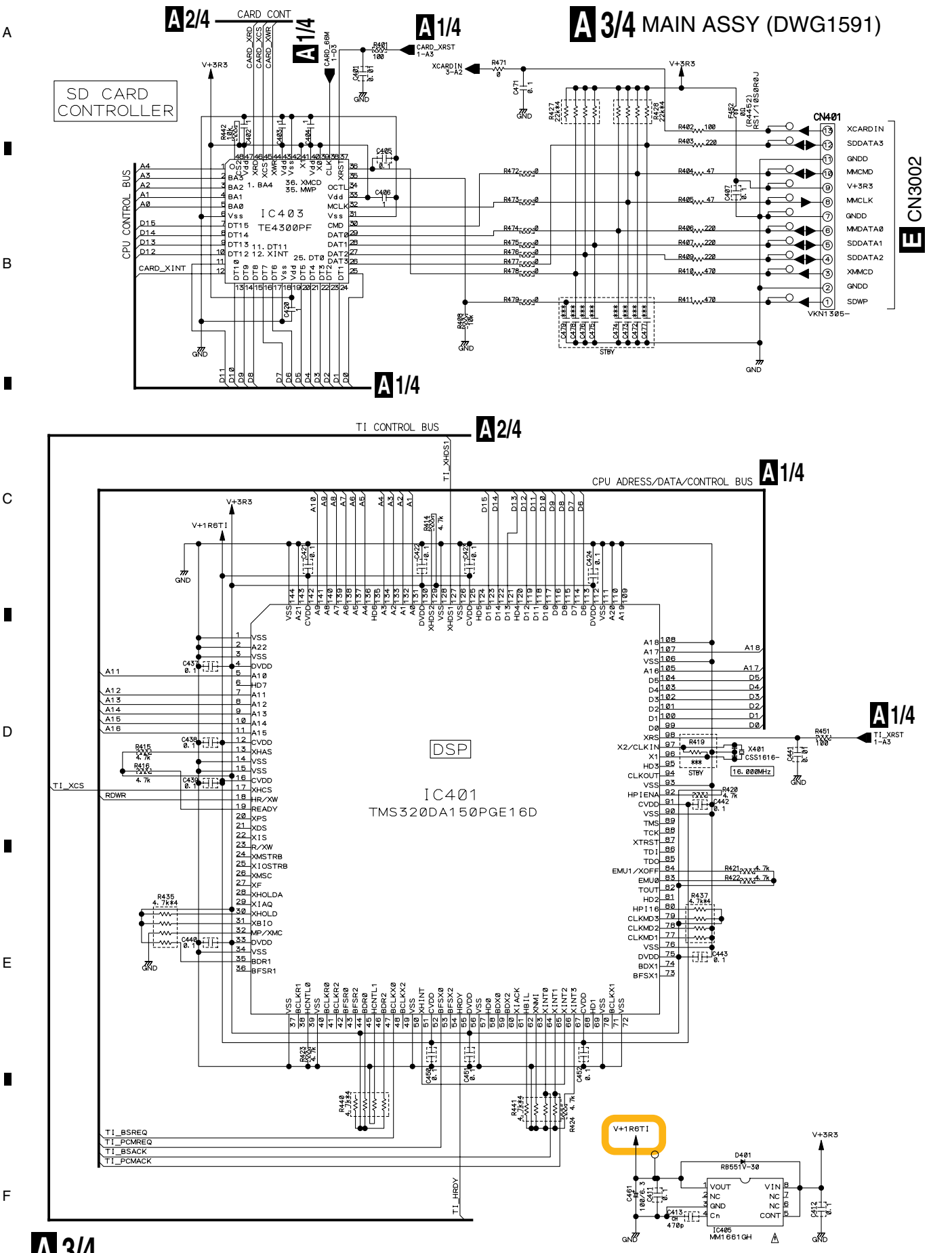

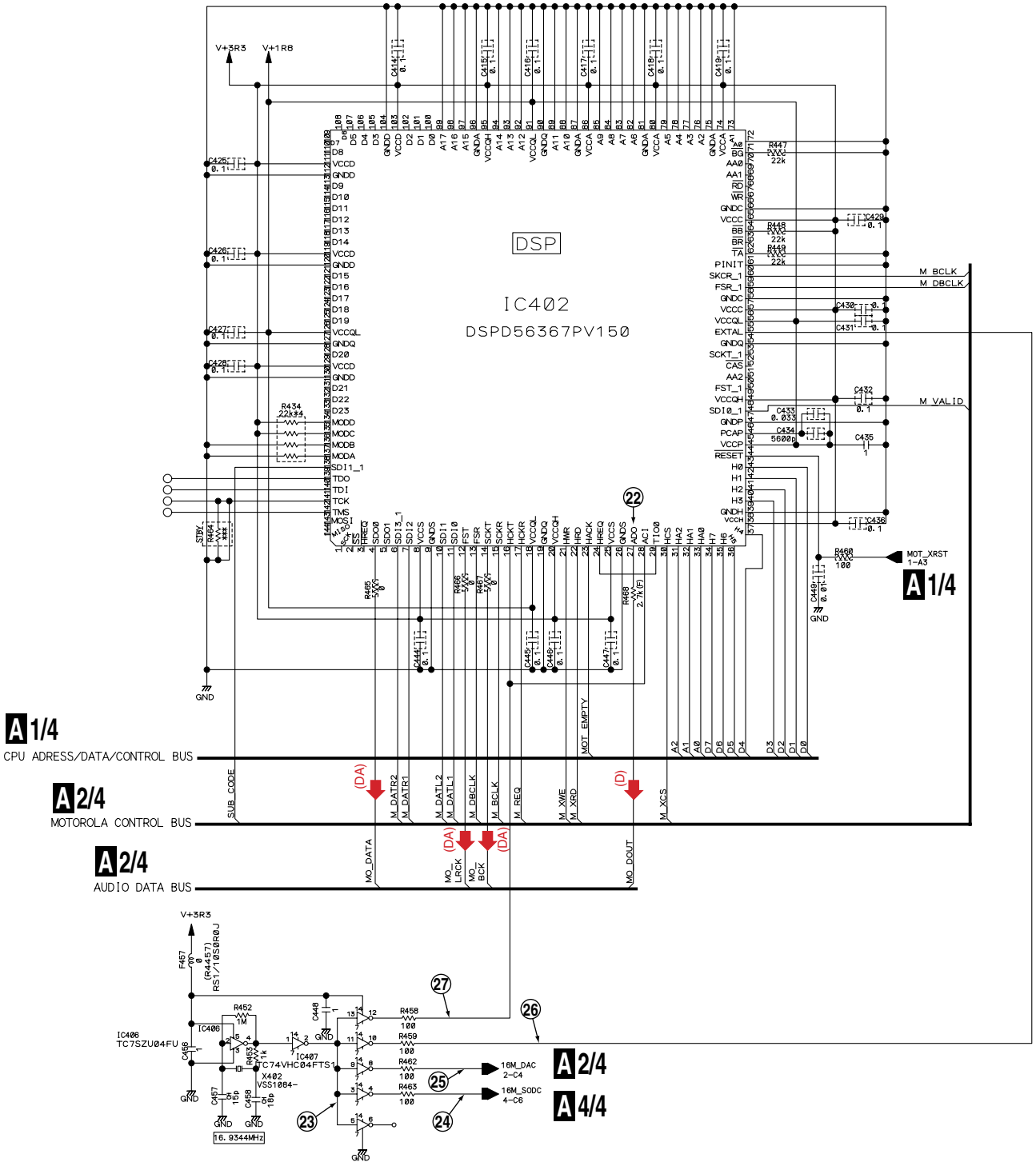

Notes

	: RS1/16S***J Ω		: CKSRYB μF
(F)	: RS1/16S****F Ω		: CKSRYB pF
(D)	: RS1/16S****D Ω	CH	: CCSRCH pF
	: RS1/16SS***J Ω		: CEHVW μF
	: RAB4CQ***J Ω		: CKSSYB μF
			: CKSSYB pF
		CH	: CCSSCH pF

STBY : STANDBY

(DA) : Audio Data Signal Route

(D) : Digital Out Signal Route

A 3/4

3.6 MAIN (4/4) and SLMB ASSYS

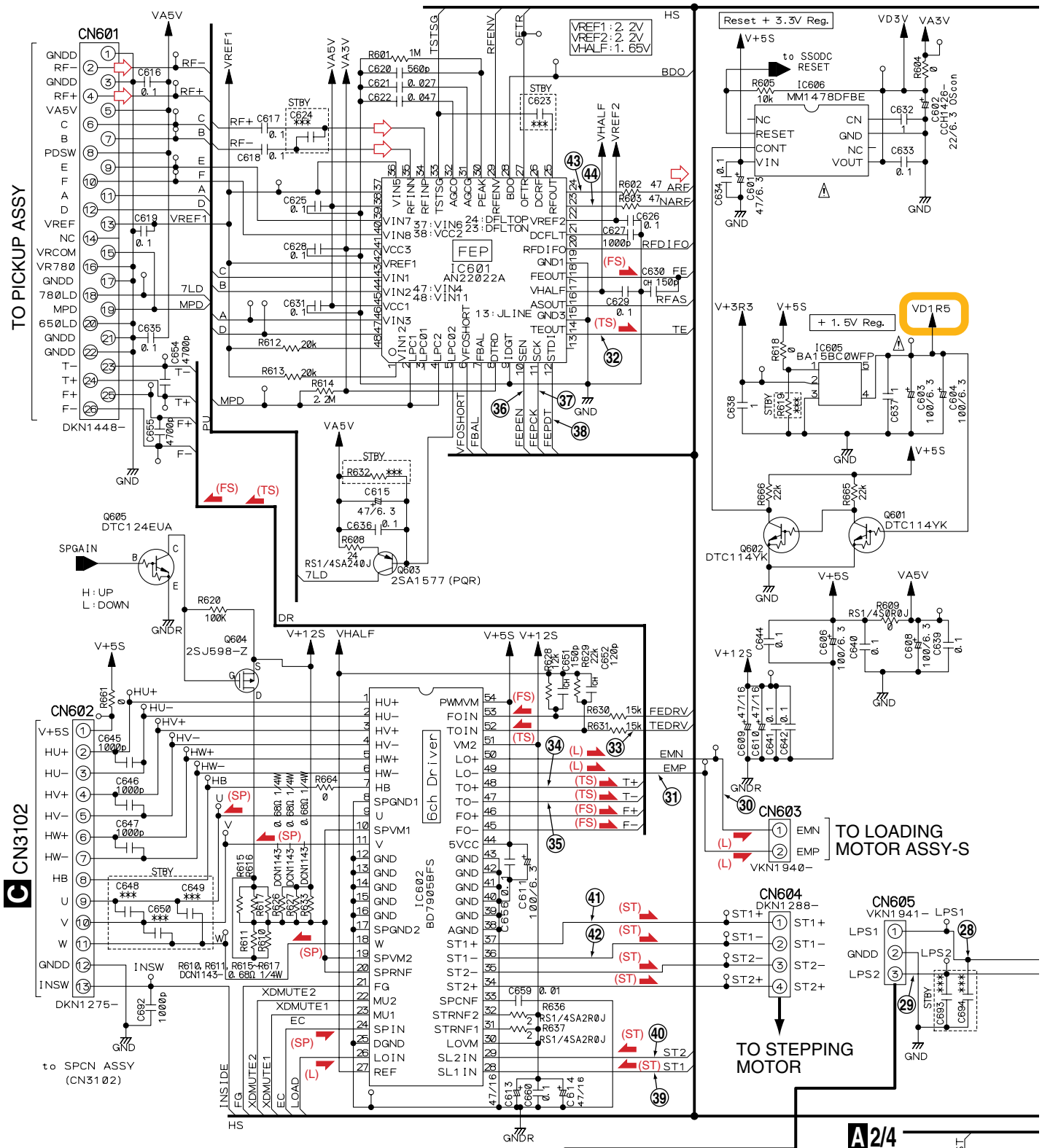

A 4/4 MAIN ASSY (DWG1591)

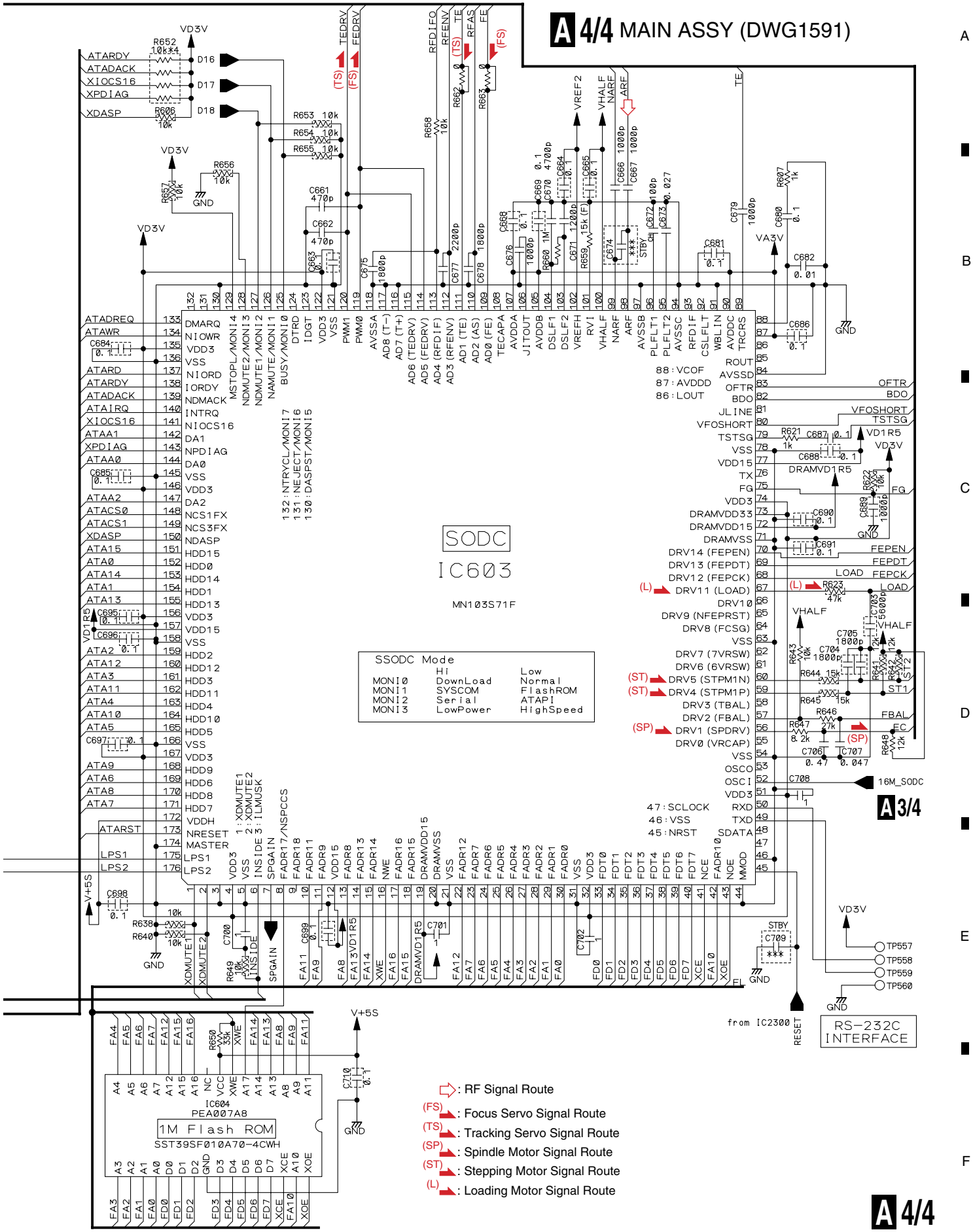

3.7 SPCN, INSW and SDCB ASSYS

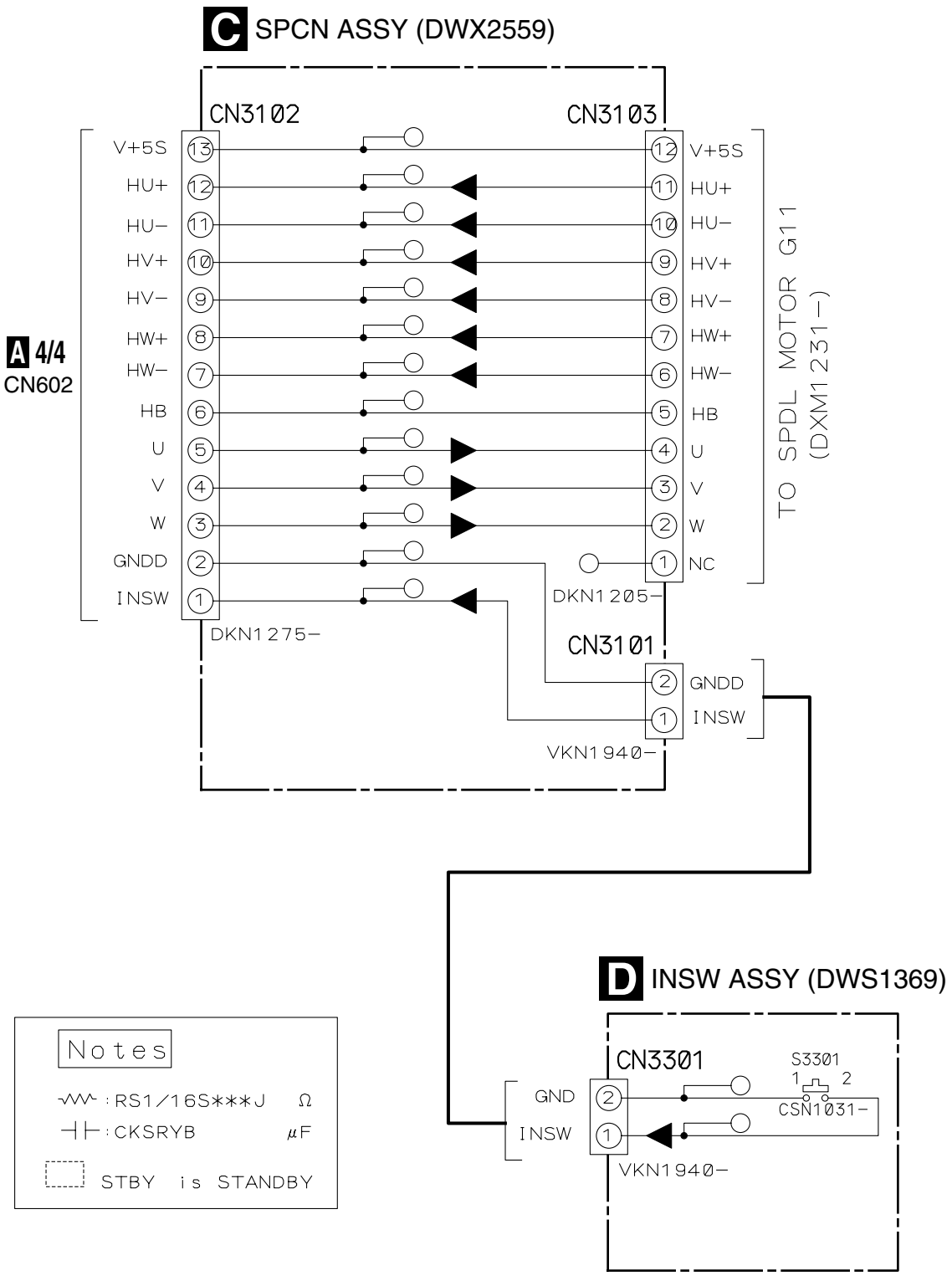

E SDCB ASSY (DWX2558)

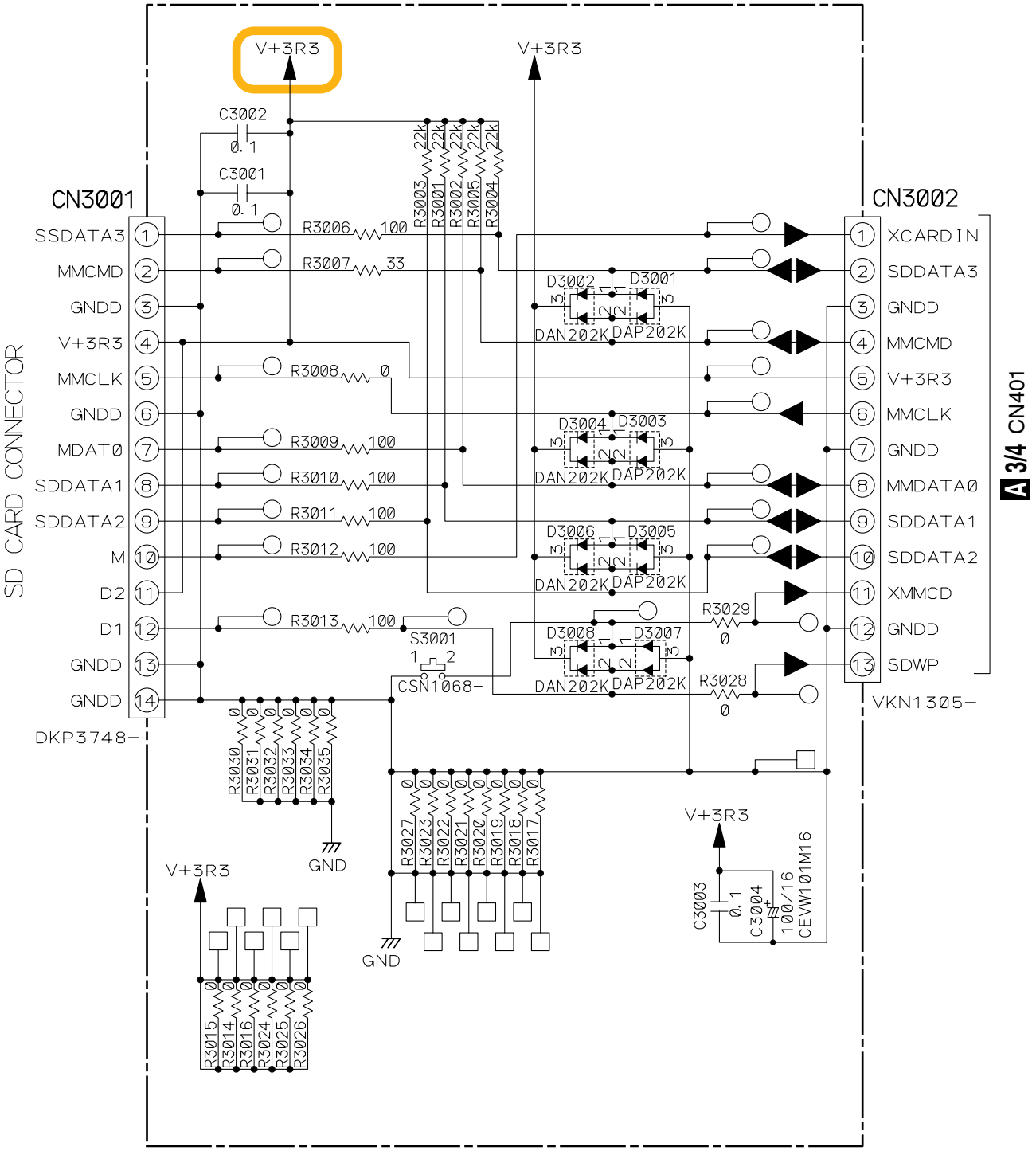

3.8 MJCB ASSY

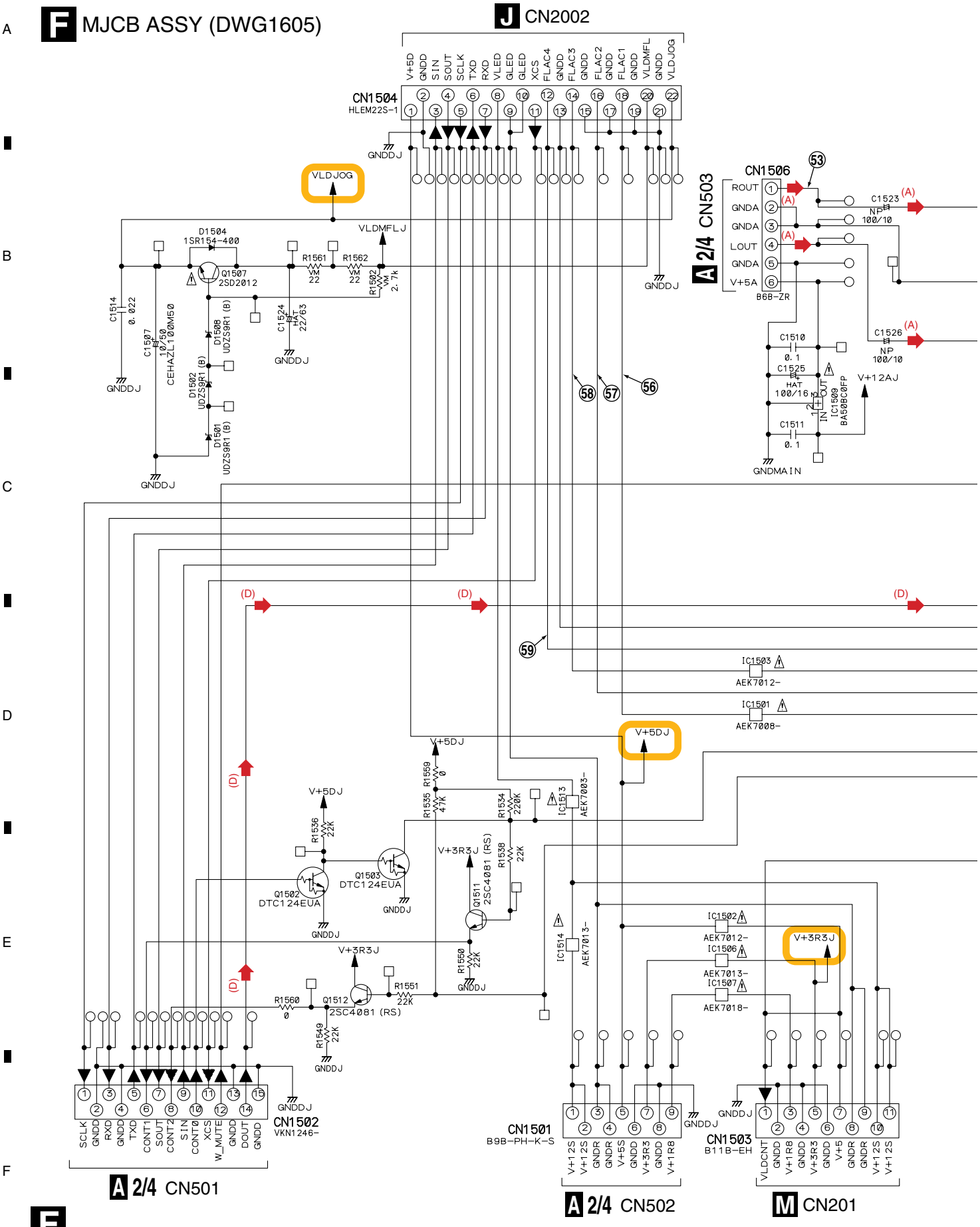
F MJCB ASSY (DWG1605)
J CN2002
V+5D GNDD SIN SOUT SCLK TXD RXD VLED GLED GLED XCS FLAC4 GNDD FLAC3 GNDD FLAC2 GNDD FLAC1 GNDD VLDMFL GNDD VLDJOG
CN1504
HLEM22S-1
GNDDJ
VLDJOG
VLDMFLJ
D1504
1SR154-400
Q1507
2SD2012
R1561
22
R1562
22
R1502
2.7k
C1514
0.022
C1507
10/50
CEHAZL100M50
D1508
UDZS9R1(B)
C1524
22/63
D1502
UDZS9R1(B)
D1501
UDZS9R1(B)
CN1506
ROUT
GNDA
GNDA
LOUT
GNDA
V+5A
B6B-ZR
A 2/4 CN503
C1523
NP
100/10
C1526
NP
100/10
C1510
0.1
C1525
HAT
100/16
IC1509
BA5068C0FP
C1511
0.1
V+12AJ
GNDMAIN
IC1503
AEK7012-
IC1501
AEK7008-
V+5DJ
R1559
0
R1535
4.7k
R1534
220k
IC1513
AEK7003-
R1536
22k
Q1503
DTC124EUA
Q1502
DTC124EUA
V+3R3J
R1538
22k
Q1511
2SC4081(RS)
R1550
22k
R1551
22k
R1560
0
Q1512
2SC4081(RS)
R1549
22k
IC1514
AEK7013-
IC1502
AEK7012-
IC1506
AEK7013-
IC1507
AEK7018-
CN1502
VKN1246-
SCLK GNDD RXD GNDD TXD CONT1 SOUT CONT2 SIN CONT0 XCS W_MUTE GNDD DOUT GNDD
A 2/4 CN501
CN1501
B9B-PH-K-S
V+12S V+12S GNDR GNDR V+5S GNDD V+3R3 GNDD V+1R8
A 2/4 CN502
CN1503
B11B-EH
VLDCNT GNDD V+1R8 GNDD V+3R3 GNDD V+5 GNDR GNDR V+12S V+12S
M CN201

CAUTION : FOR CONTINUED PROTECTION AGAINST RISK OF FIRE. REPLACE ONLY WITH SAME TYPE NO. AEK7008- 491.800 MFD, BY LITTELFUSE INK. FOR IC1501.

CAUTION : FOR CONTINUED PROTECTION AGAINST RISK OF FIRE. REPLACE ONLY WITH SAME TYPE NO. AEK7023- 491.200 MFD, BY LITTELFUSE INK. FOR IC1504.

CAUTION : FOR CONTINUED PROTECTION AGAINST RISK OF FIRE. REPLACE ONLY WITH SAME TYPE NO. AEK7013- 4910002. MFD, BY LITTELFUSE INK. FOR IC1506 AND IC1514.

CAUTION : FOR CONTINUED PROTECTION AGAINST RISK OF FIRE. REPLACE ONLY WITH SAME TYPE NO. AEK7012- 49101.6 MFD, BY LITTELFUSE INK. FOR IC1502 AND IC1503.

CAUTION : FOR CONTINUED PROTECTION AGAINST RISK OF FIRE. REPLACE ONLY WITH SAME TYPE NO. AEK7018- 491004. MFD, BY LITTELFUSE INK. FOR IC1507.

(A) : Analog Audio Signal Route

(D) : Digital Out Signal Route

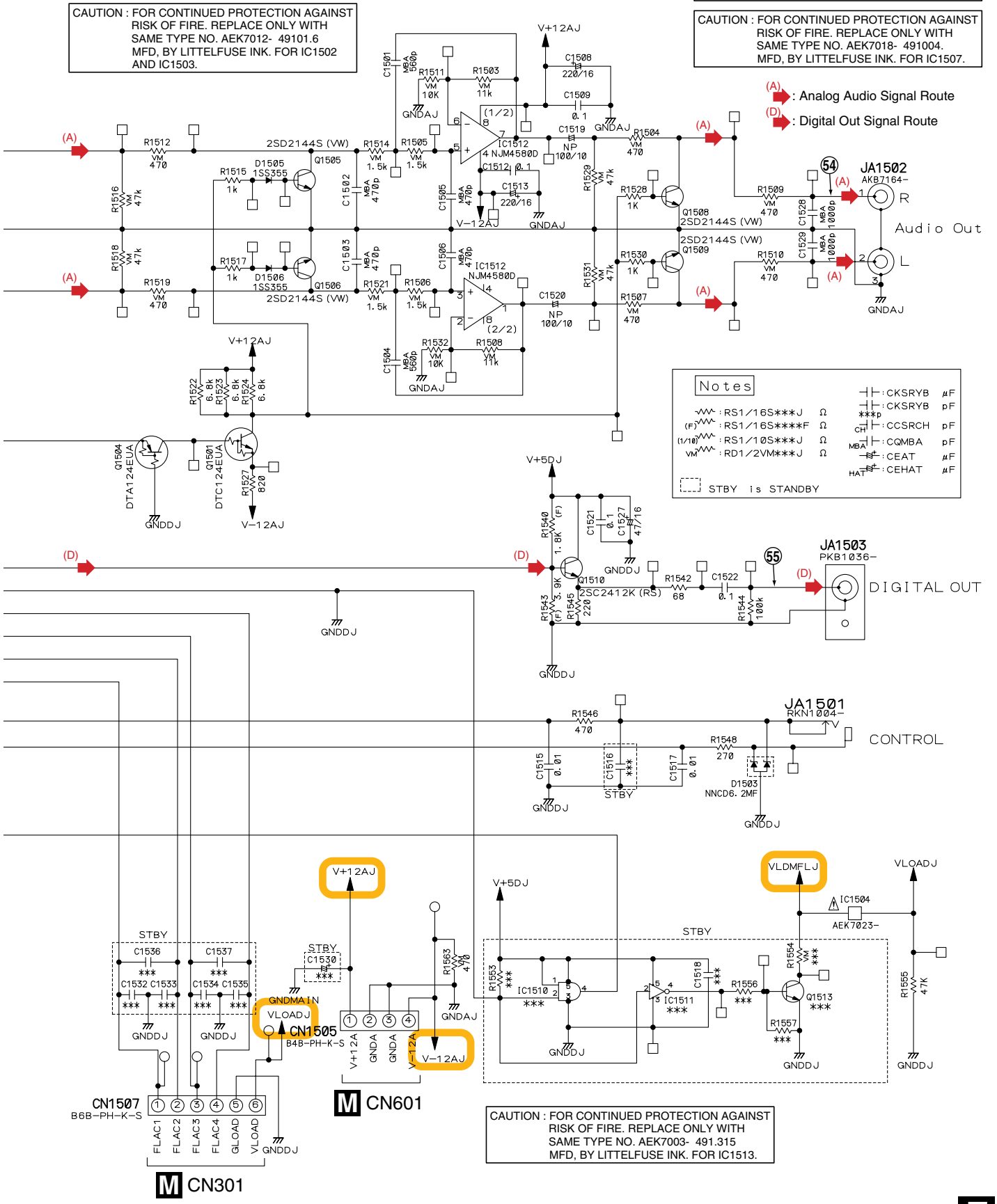

3.9 MFLB ASSY

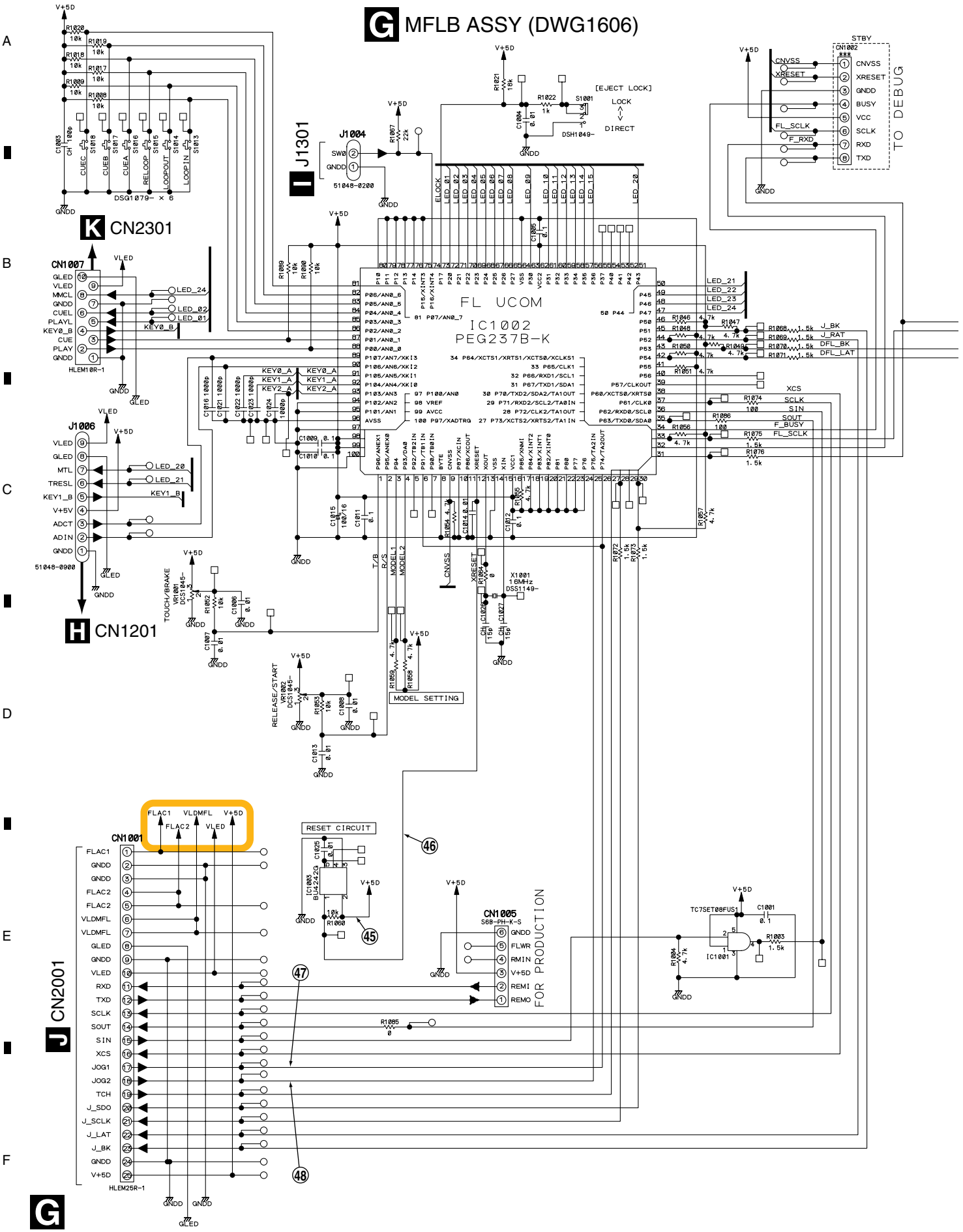
G MFLB ASSY (DWG1606)
FL UCOM
IC1002
PEG237B-K
J1301
J1004
CN2301
CN1007
J1006
CN1201
CN1001
CN2001
CN1005
CN1002
STBY
TO DEBUG
FOR PRODUCTION
[EJECT LOCK]
LOCK
DIRECT
DSH1049-
DSG1079- × 6
51048-0200
HLEM10R-1
HLEM25R-1
51048-0900
TOUCH/BRAKE
RELEASE/START
MODEL SETTING
RESET CIRCUIT
X1001
16MHz
DSS1149-
TC7SET08FUS1
IC1001
S6B-PH-K-S
CNVSS
XRESET
GNDD
BUSY
VCC
SCLK
RXD
TXD
FL_SCLK
F_RXD
FLAC1
FLAC2
VLDMFL
VLED
V+5D
GLED
MTL
TRESL
KEY1_B
V+5V
ADCT
ADIN
LED_20
LED_21
LED_24
LED_02
LED_01
KEY0_B
KEY1_A
KEY2_A
KEY0_A
J_BK
J_RAT
DFL_BK
DFL_LAT
XCS
SIN
SOUT
F_BUSY
FLAG1
FLAG2
JOG1
JOG2
TCH
J_SDO
J_SCLK
J_LAT
FLWR
RMIN
REMI
REMO
MODEL_1
MODEL_2
T/B
R/S

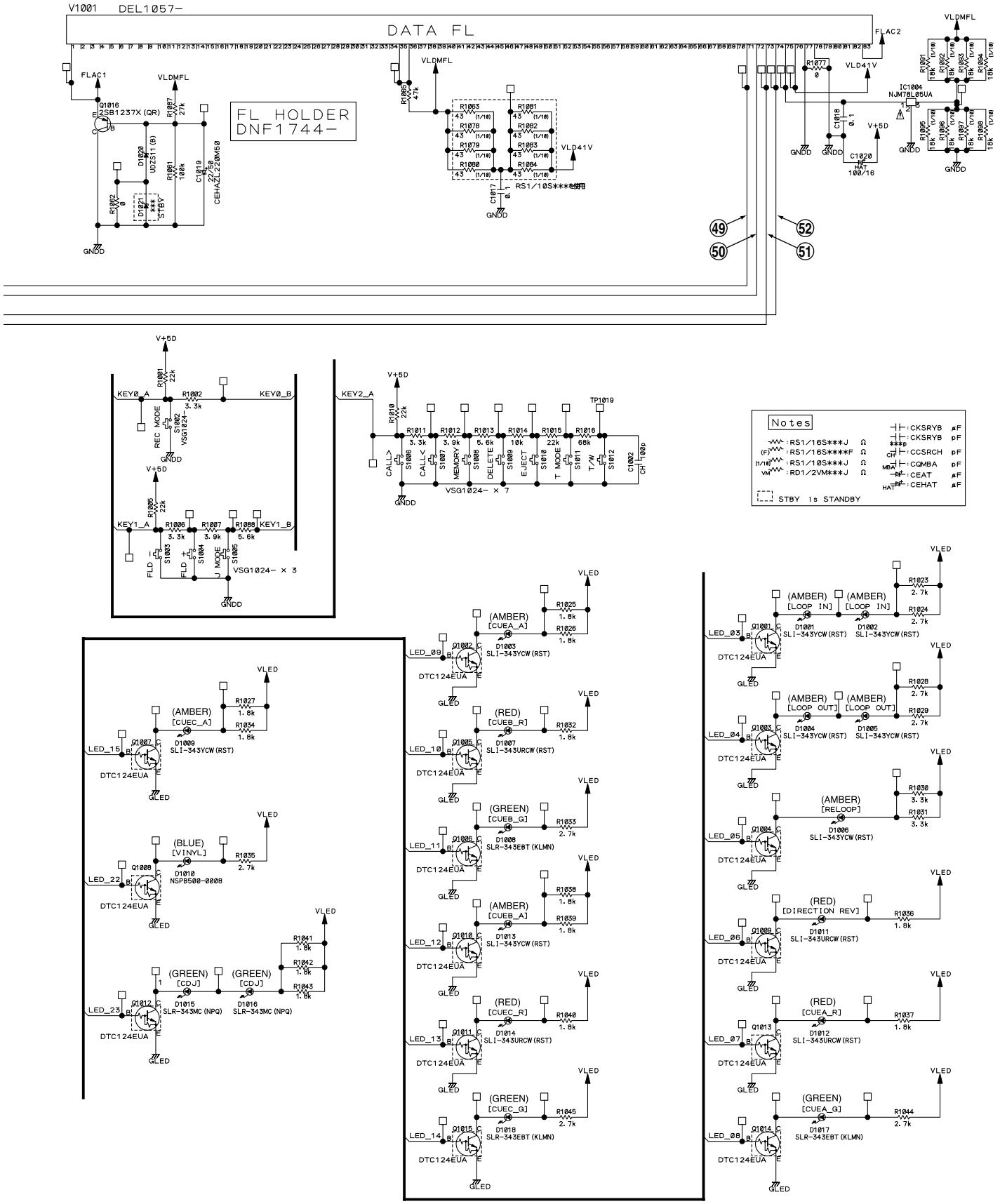
V1001 DEL1057-
DATA FL
FL HOLDER
DNF1744-
FLAC1
FLAC2
VLDMFL
VLD41V
V+5D
GNDD
Q1016
2SB1237X (QR)
D1020
UDZS11 (B)
D1021
STBY
C1019
CEHAZL220M50
RS1/10S***%使用
IC1004
NJM78L05UA
C1020
HAT
100/16
C1018
0.1
R1077
0
R1065
47k
R1097
27k
R1061
100k
R1062
0
49
50
51
52
KEY0_A
KEY0_B
KEY2_A
KEY1_A
KEY1_B
REC MODE
VSG1024-
VSG1024- × 7
VSG1024- × 3
CALL>
CALL<
MEMORY
DELETE
EJECT
T MODE
T/W
TP1019
C1002
100p
FLD
J MODE
Notes
RS1/16S***J Ω
RS1/16S****F Ω
RS1/10S***J Ω
RD1/2VM***J Ω
CKSRYB μF
CKSRYB pF
CCSRCH pF
CQMBA pF
CEAT μF
CEHAT μF
STBY is STANDBY
(AMBER) [CUEA_A]
(AMBER) [LOOP IN]
(AMBER) [LOOP OUT]
(AMBER) [RELOOP]
(AMBER) [CUEC_A]
(BLUE) [VINYL]
(GREEN) [CDJ]
(RED) [CUEB_R]
(GREEN) [CUEB_G]
(RED) [DIRECTION REV]
(RED) [CUEA_R]
(GREEN) [CUEA_G]
(RED) [CUEC_R]
(GREEN) [CUEC_G]
SLI-343YCW(RST)
SLI-343URCW(RST)
SLR-343EBT(KLMN)
SLR-343MC(NPQ)
NSPB500-0008
DTC124EUA
LED_03
LED_04
LED_05
LED_06
LED_07
LED_08
LED_09
LED_10
LED_11
LED_12
LED_13
LED_14
LED_15
LED_22
LED_23
VLED
GLED

3.10 SLDB and RSWB ASSYS

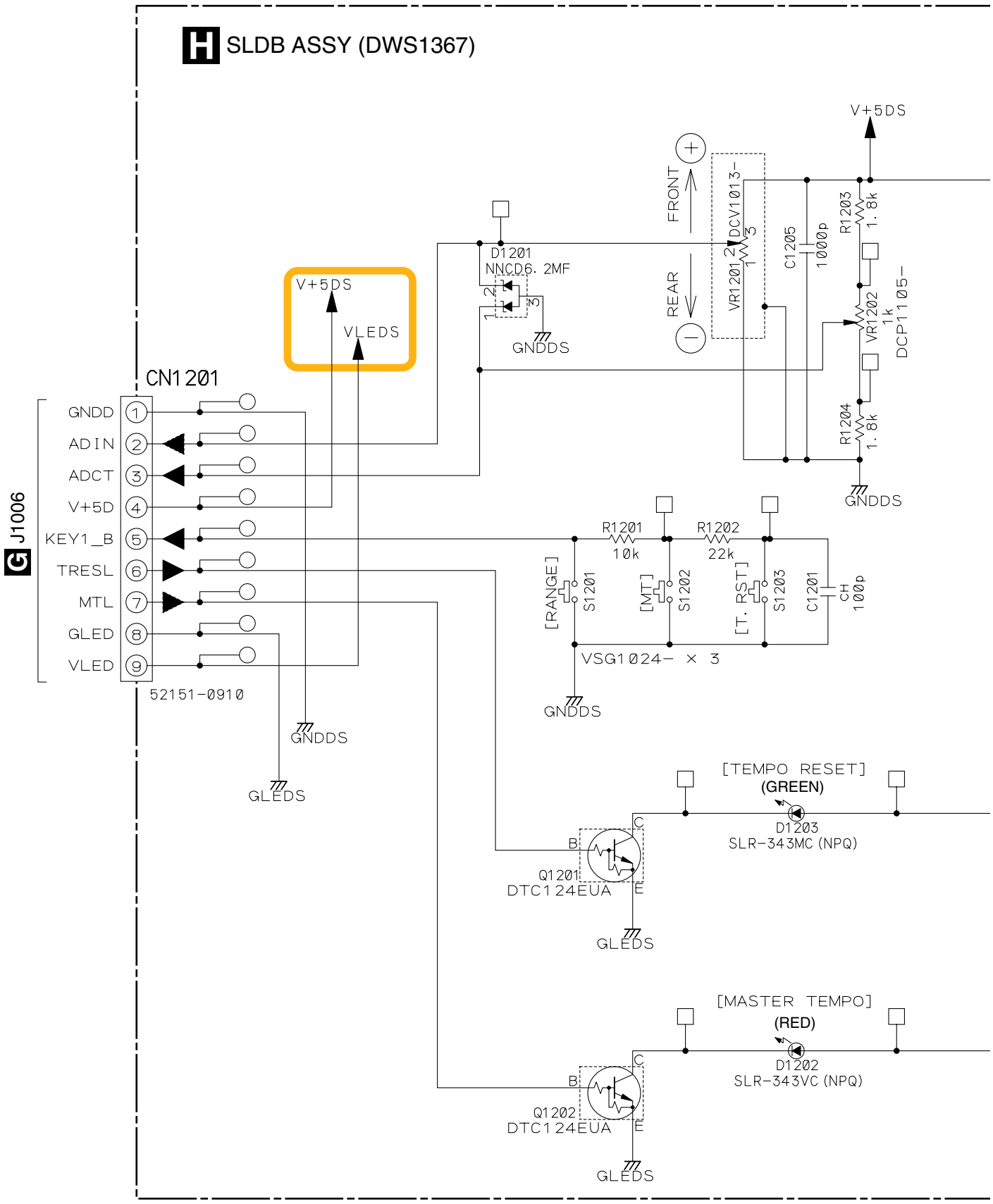

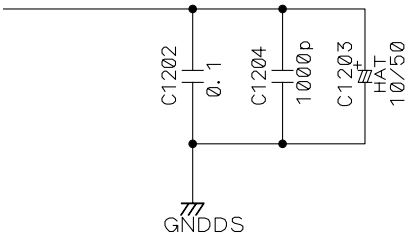

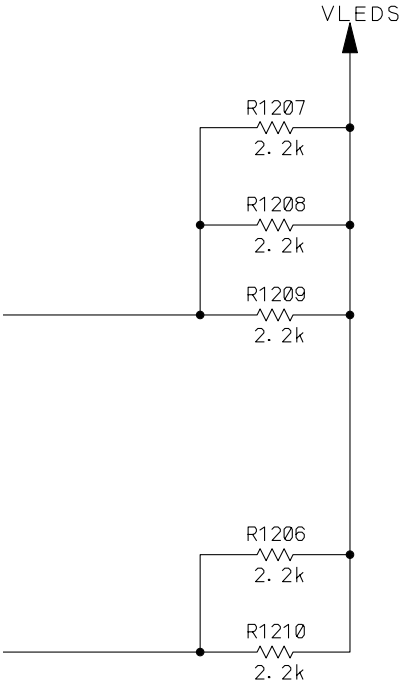

Notes

	: RS1/16S***J	Ω		: CKSRYB	μF
(F)	: RS1/16S****F	Ω	***p	: CKSRYB	pF
(1/10)	: RS1/10S***J	Ω	CH	: CCSRCH	pF
VM	: RD1/2VM***J	Ω	MBA	: CQMBA	pF
				: CEAT	μF
			HAT	: CEHAT	μF

STBY is STANDBY

I RSWB ASSY (DWS1368)

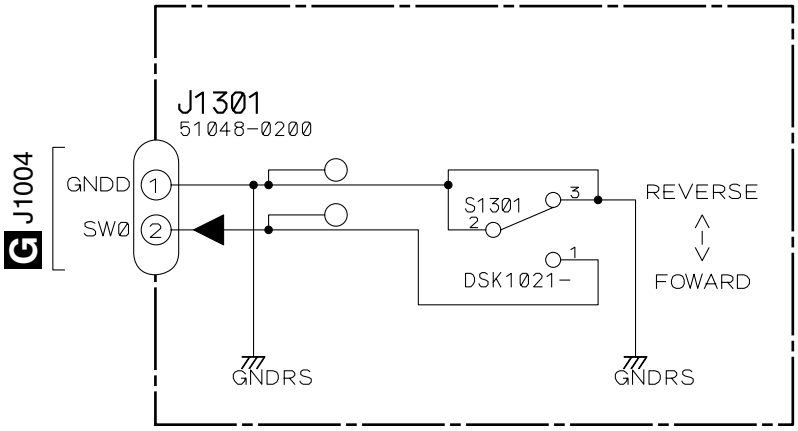

3.11 JFLB, KSWB and JOGB ASSYS

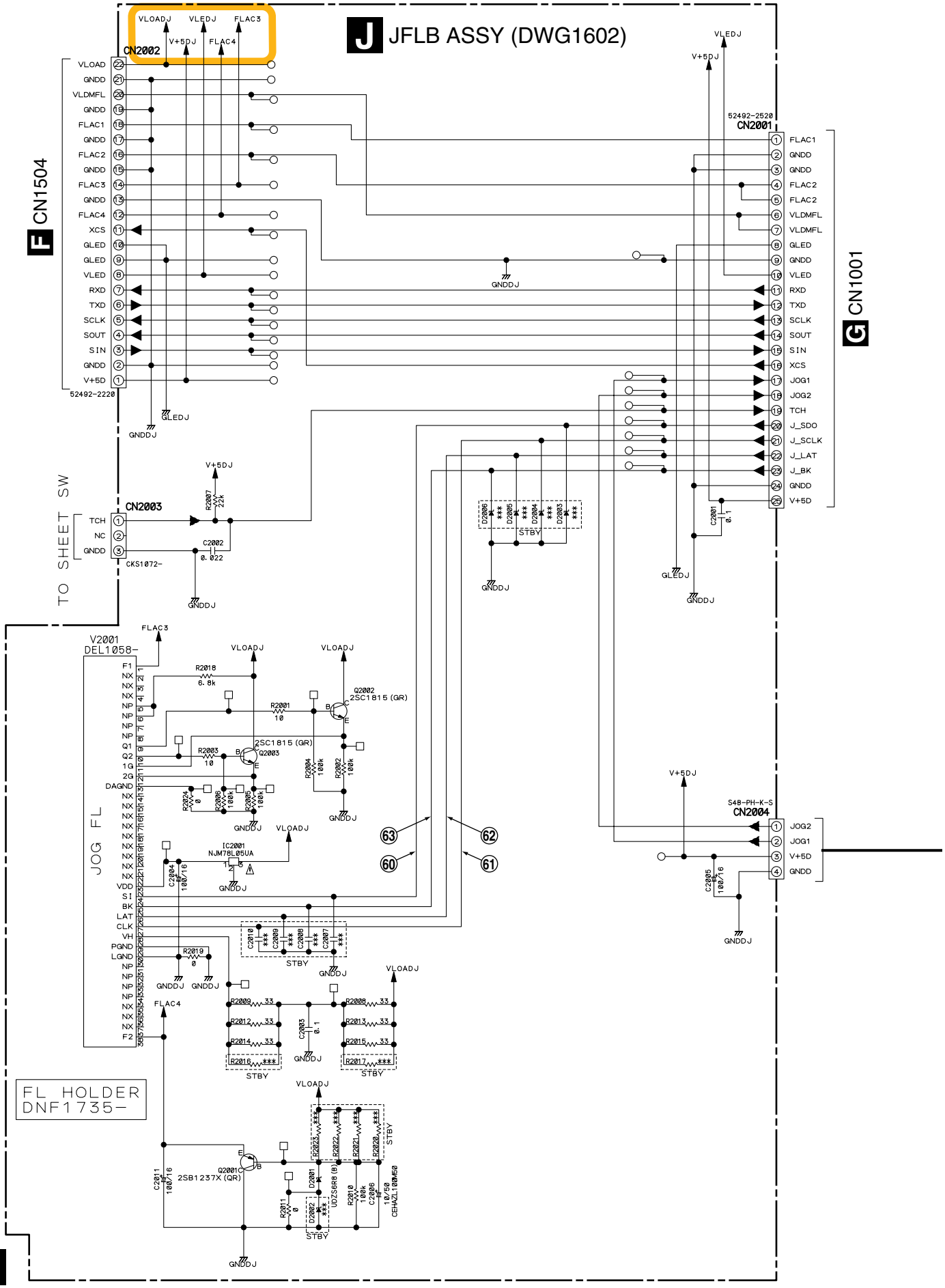

K KSWB ASSY (DWS1365)

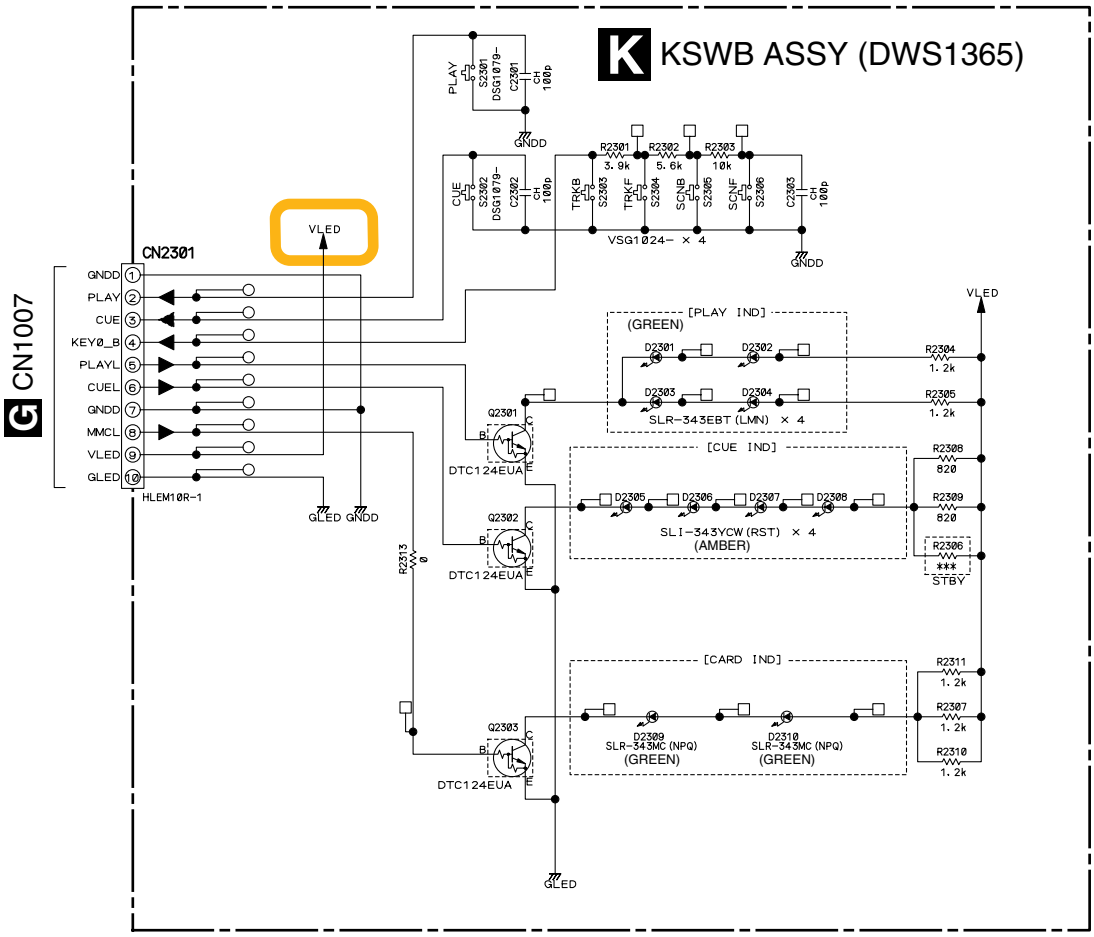

L JOGB ASSY (DWG1603)

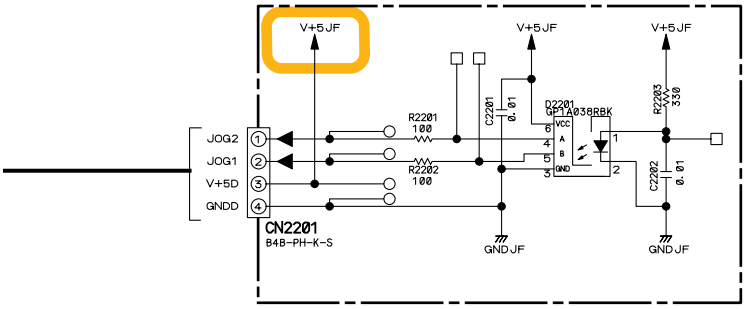

Notes

: RS1/16S***J Ω

: CKSRYB μF

: CCSRCH pF

: CEHAT μF

STBY is STANDBY

3.12 SW POWER SUPPLY ASSY

M SW POWER SUPPLY ASSY (DWR1409)

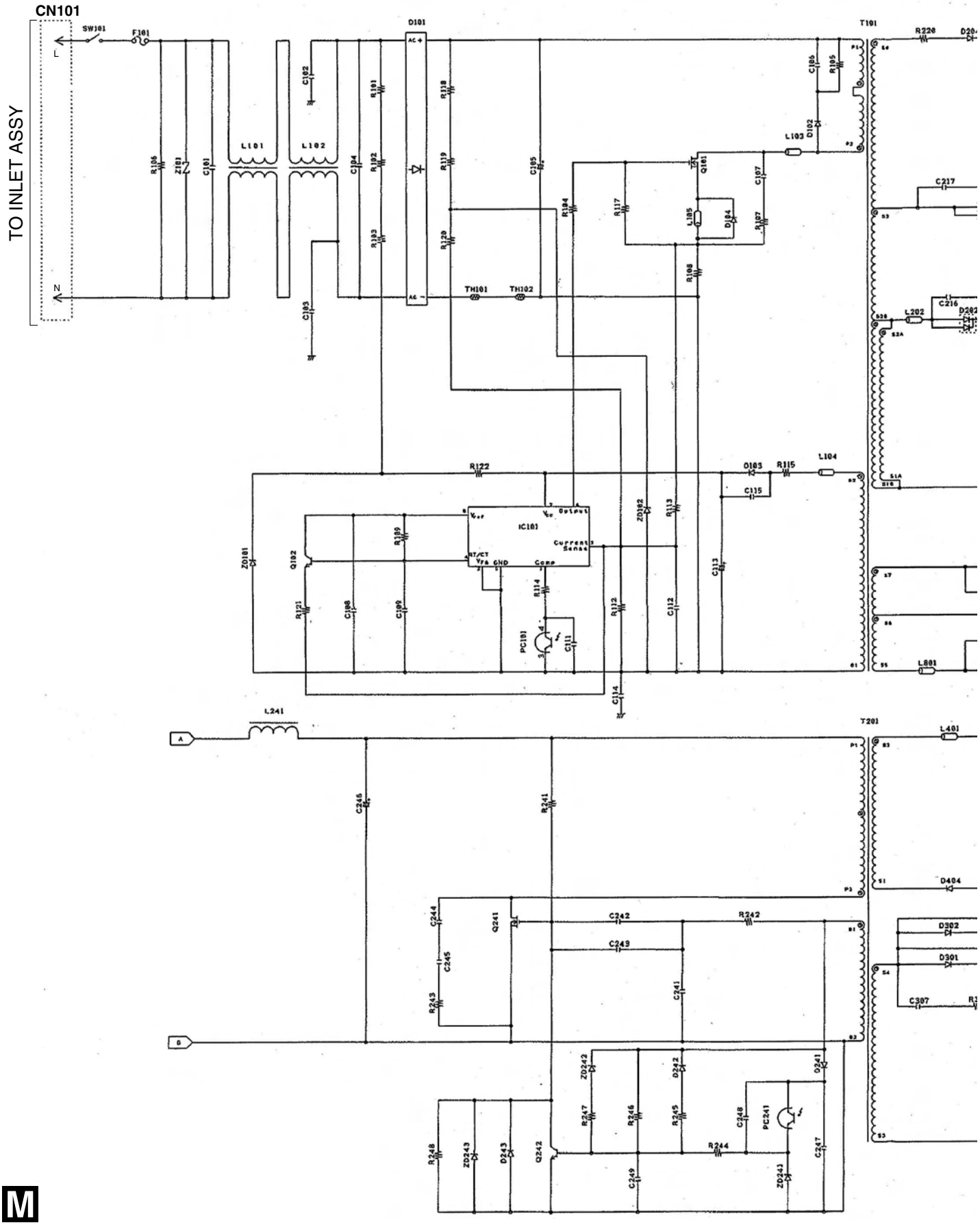

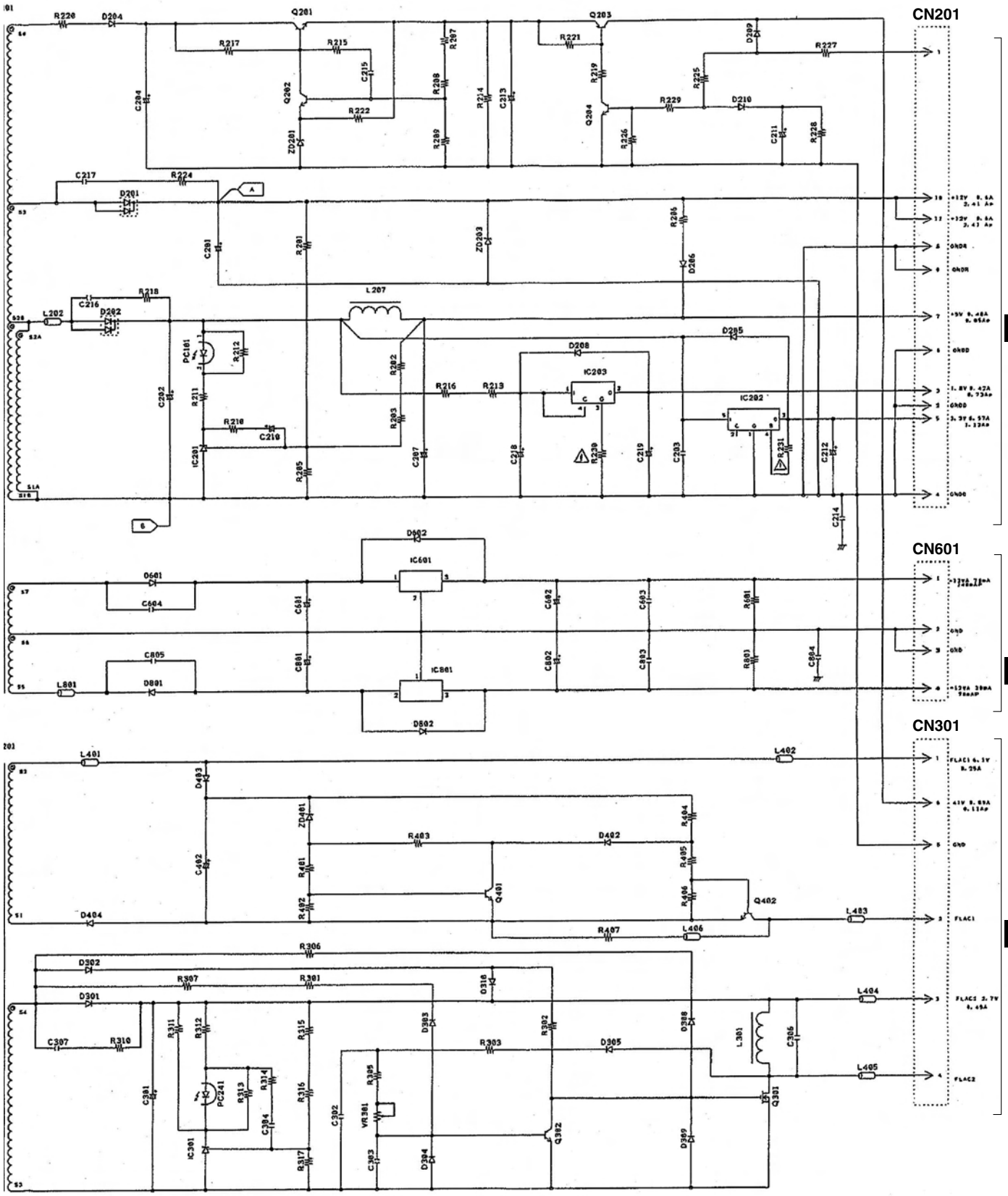
CN201
CN601
CN301
F CN1503
F CN1505
F CN1507

3.13 WAVEFORMS

■ WAVEFORMS

Note : The encircled numbers denote measuring point in the schematic diagram and pcb diagram.

A 1/4 MAIN ASSY
Mode: Power ON

① **IC104 - 2 pin (V+3R3)**
V: 2V/div. H: 100mS/div.

② **IC104 - 1 pin (RSTCPU)**
V: 2V/div. H: 100mS/div.

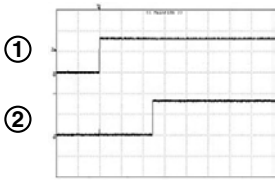

A 1/4 MAIN ASSY
Mode: Power ON

② **IC104 - 1 pin (RSTCPU)**
V: 2V/div. H: 500mS/div.

⑥ **IC114 - 6 pin (MOT_XRST)**
V: 2V/div. H: 500mS/div.

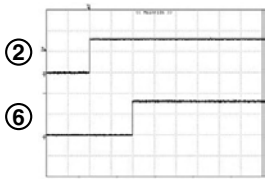

A 1/4 MAIN ASSY
Mode: PLAY

⑩ **IC107 - 6 pin (SH_66M)**
V: 0.5V/div. H: 5nS/div.

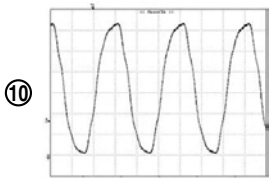

A 2/4 MAIN ASSY
Mode: PLAY (1kHz, 0dB)

⑮ **IC501 - 1 pin (MO_LRCK)**
V: 2V/div. H: 5µS/div.

⑯ **IC501 - 2 pin (MO_DATA)**
V: 2V/div. H: 5µS/div.

⑰ **IC501 - 3 pin (MO_BCK)**
V: 2V/div. H: 5µS/div.

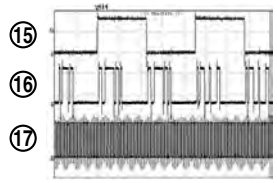

A 1/4 MAIN ASSY
Mode: Power ON

② **IC104 - 1 pin (RSTCPU)**
V: 2V/div. H: 500mS/div.

③ **IC114 - 10 pin (DMA_XRST)**
V: 2V/div. H: 500mS/div.

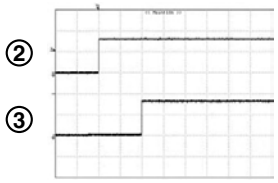

A 1/4 MAIN ASSY
Mode: Power ON

② **IC104 - 1 pin (RSTCPU)**
V: 2V/div. H: 500mS/div.

⑦ **IC114 - 12 pin (ATARST)**
V: 2V/div. H: 500mS/div.

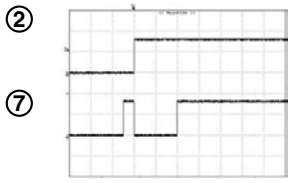

A 1/4 MAIN ASSY
Mode: PLAY

⑪ **IC107 - 8 pin (SDRAM_66M)**
V: 0.5V/div. H: 5nS/div.

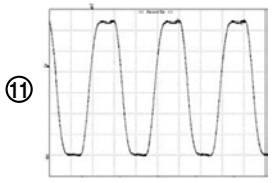

A 2/4 MAIN ASSY
Mode: PLAY

⑱ **CN501 - 1 pin (SCLK)**
V: 5V/div. H: 20µS/div.

⑲ **CN501 - 7 pin (SOUT)**
V: 5V/div. H: 20µS/div.

⑳ **CN501 - 9 pin (SIN)**
V: 5V/div. H: 20µS/div.

㉑ **CN501 - 11 pin (XCS)**
V: 5V/div. H: 20µS/div.

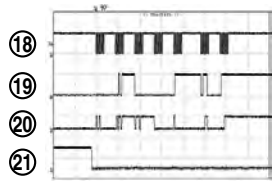

A 1/4 MAIN ASSY
Mode: Power ON

② **IC104 - 1 pin (RSTCPU)**
V: 2V/div. H: 500mS/div.

④ **IC114 - 8 pin (CARD_XRST)**
V: 2V/div. H: 500mS/div.

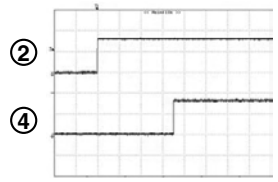

A 1/4 MAIN ASSY
Mode: PLAY

⑧ **IC107 - 3 pin (66MHz CLOCK)**
V: 0.5V/div. H: 5nS/div.

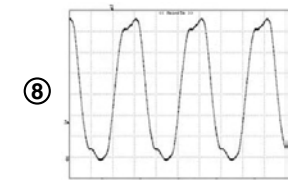

A 1/4 MAIN ASSY
Mode: PLAY

⑫ **IC107 - 10 pin (FPGA_66M)**
V: 0.5V/div. H: 5nS/div.

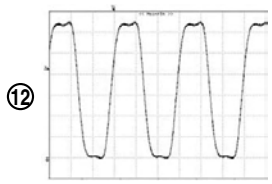

A 3/4 MAIN ASSY
Mode: PLAY

㉒ **IC402 - 27 pin (MO_DOUT)**
V: 1V/div. H: 200nS/div.

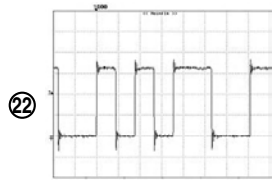

A 1/4 MAIN ASSY
Mode: Power ON

② **IC104 - 1 pin (RSTCPU)**
V: 2V/div. H: 500mS/div.

⑤ **IC114 - 4 pin (TI_XRST)**
V: 2V/div. H: 500mS/div.

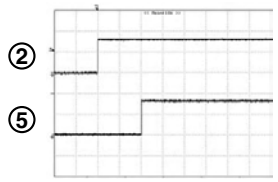

A 1/4 MAIN ASSY
Mode: PLAY

⑨ **IC107 - 4 pin (CARD_66M)**
V: 0.5V/div. H: 5nS/div.

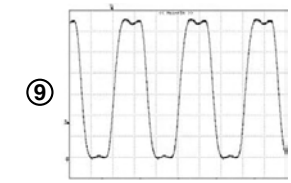

A 2/4 MAIN ASSY
Mode: Power ON

⑬ **IC302 - 8 pin (V+3R3)**
V: 2V/div. H: 500mS/div.

⑭ **IC301 - 71 pin (FPGA_DONE)**
V: 2V/div. H: 500mS/div.

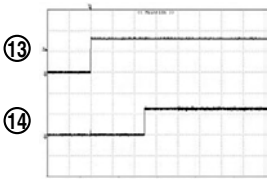

A 3/4 MAIN ASSY
Mode: PLAY

㉓ **IC407 - 5 pin (16MHz CLOCK)**
V: 1V/div. H: 20nS/div.

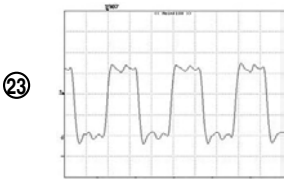

Note : The encircled numbers denote measuring point in the schematic diagram and pcb diagram.

A 3/4 MAIN ASSY
Mode: PLAY

㉔ **IC407 - 4 pin (16M_SODC)**
V: 1V/div. H: 20nS/div.

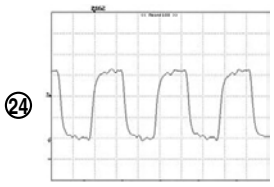

A 3/4 MAIN ASSY
Mode: PLAY

㉕ **IC407 - 8 pin (16M_DAC)**
V: 1V/div. H: 20nS/div.

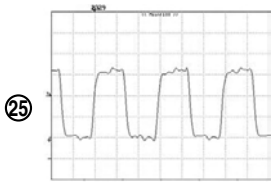

A 3/4 MAIN ASSY
Mode: PLAY

㉖ **IC407 - 10 pin (Clock for DSP)**
V: 1V/div. H: 20nS/div.

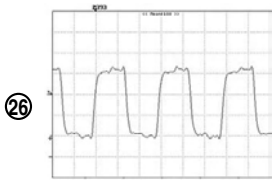

A 3/4 MAIN ASSY
Mode: PLAY

㉗ **IC407 - 12 pin (Clock for DSP)**
V: 1V/div. H: 20nS/div.

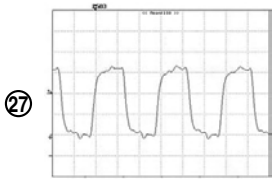

A 4/4 MAIN ASSY
Mode: LOAD IN

㉘ **CN605 - 1 pin (LPS1)**
V: 5V/div. H: 200mS/div.

㉙ **CN605 - 3 pin (LPS2)**
V: 5V/div. H: 200mS/div.

㉚ **CN603 - 1 pin (EMN)**
V: 5V/div. H: 200mS/div.

㉛ **CN603 - 2 pin (EMP)**
V: 5V/div. H: 200mS/div.

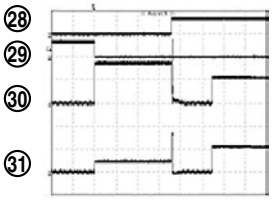

A 4/4 MAIN ASSY
Mode: UNLOADING

㉘ **CN605 - 1 pin (LPS1)**
V: 5V/div. H: 200mS/div.

㉙ **CN605 - 3 pin (LPS2)**
V: 5V/div. H: 200mS/div.

㉚ **CN603 - 1 pin (EMN)**
V: 5V/div. H: 200mS/div.

㉛ **CN603 - 2 pin (EMP)**
V: 5V/div. H: 200mS/div.

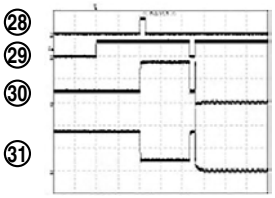

A 4/4 MAIN ASSY
Mode: PAUSE

㉜ **IC601 - 14 pin (TE)**
V: 2V/div. H: 200µS/div.

㉝ **IC602 - 52 pin (TEDRV)**
V: 2V/div. H: 200µS/div.

㉞ **IC602 - 48 pin (T+)**
V: 5V/div. H: 200µS/div.

㉟ **IC602 - 47 pin (T-)**
V: 5V/div. H: 200µS/div.

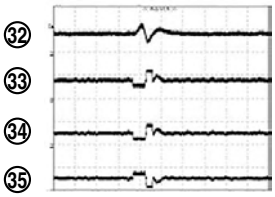

A 4/4 MAIN ASSY
Mode: FWD SCAN

㉜ **IC601 - 14 pin (TE)**
V: 2V/div. H: 500µS/div.

㉝ **IC602 - 52 pin (TEDRV)**
V: 2V/div. H: 500µS/div.

㉞ **IC602 - 48 pin (T+)**
V: 5V/div. H: 500µS/div.

㉟ **IC602 - 47 pin (T-)**
V: 5V/div. H: 500µS/div.

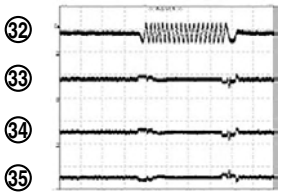

A 4/4 MAIN ASSY
Mode: REV SCAN

㉜ **IC601 - 14 pin (TE)**
V: 2V/div. H: 500µS/div.

㉝ **IC602 - 52 pin (TEDRV)**
V: 2V/div. H: 500µS/div.

㉞ **IC602 - 48 pin (T+)**
V: 5V/div. H: 500µS/div.

㉟ **IC602 - 47 pin (T-)**
V: 5V/div. H: 500µS/div.

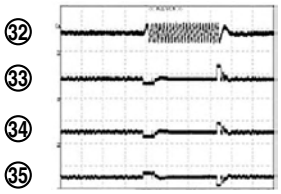

A 4/4 MAIN ASSY
Mode: PLAY

㊱ **IC601 - 10 pin (FEPEN)**
V: 2V/div. H: 5µS/div.

㊲ **IC601 - 11 pin (FEPCK)**
V: 2V/div. H: 5µS/div.

㊳ **IC601 - 12 pin (FEPDT)**
V: 2V/div. H: 5µS/div.

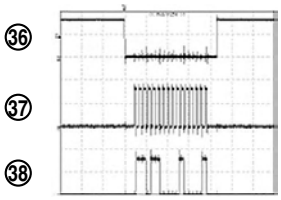

A 4/4 MAIN ASSY
Mode: FWD SCAN

㊴ **IC602 - 28 pin (ST1)**
V: 2V/div. H: 500mS/div.

㊵ **IC602 - 29 pin (ST2)**
V: 2V/div. H: 500mS/div.

㊶ **CN604 - 1 pin (ST1+)**
V: 10V/div. H: 500mS/div.

㊷ **CN604 - 2 pin (ST1-)**
V: 10V/div. H: 500mS/div.

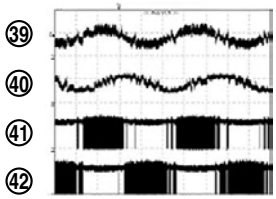

A 4/4 MAIN ASSY
Mode: PLAY

㊸ **IC601 - 24 pin (ARF)**

㊹ **IC601 - 23 pin (NARF)**

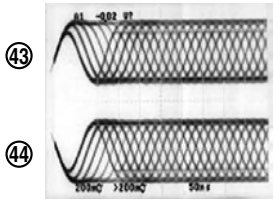

G MFLB ASSY
Mode: Power ON

㊺ **IC1003 - 2 pin (V+5D)**
V: 2V/div. H: 100mS/div.

㊻ **IC1002 - 12 pin (XRESET)**
V: 2V/div. H: 100mS/div.

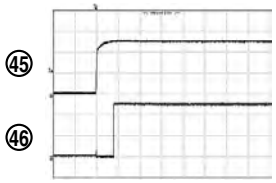

G MFLB ASSY
Mode: Rotates a JOG during playback

㊼ **CN1001 - 17 pin (JOG1)**
V: 2V/div. H: 2mS/div.

㊽ **CN1001 - 18 pin (JOG2)**
V: 2V/div. H: 2mS/div.

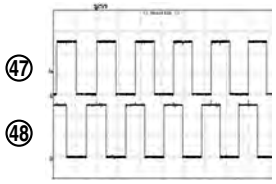

SIDE A

A

MAIN ASSY

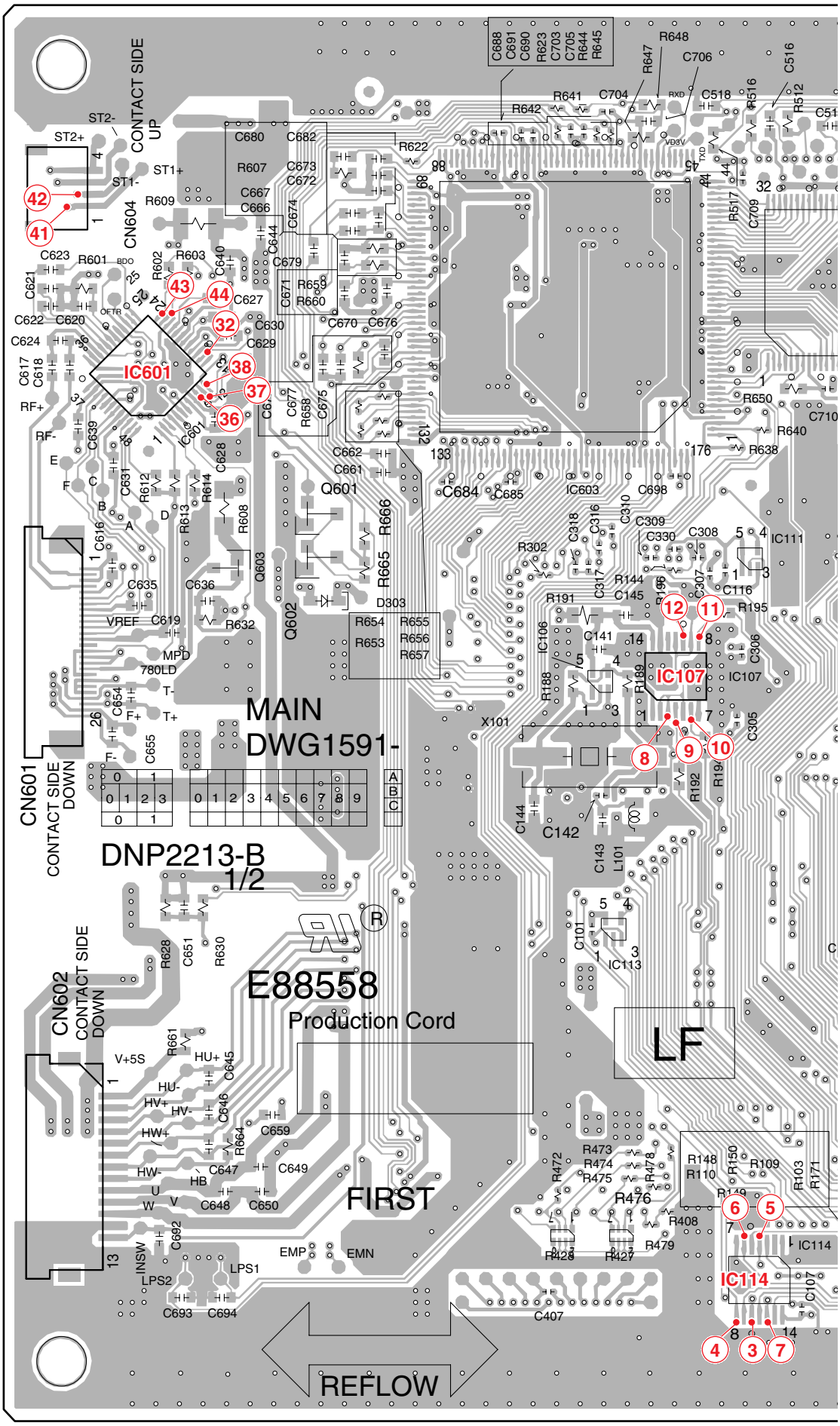

SIDE A

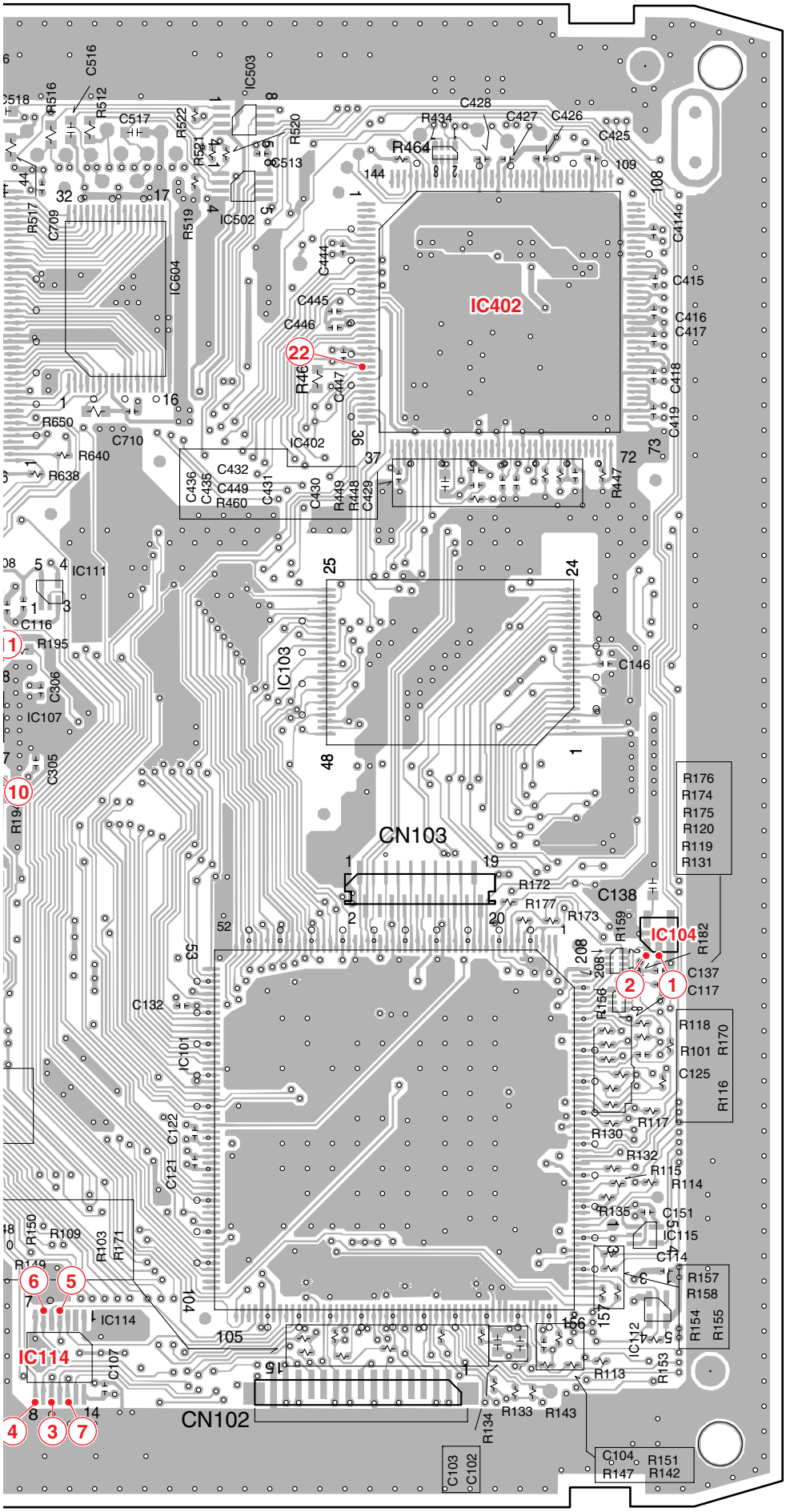

Note :
The encircled numbers denote measuring point.

(DNP2213-B)

SIDE B

A

MAIN ASSY

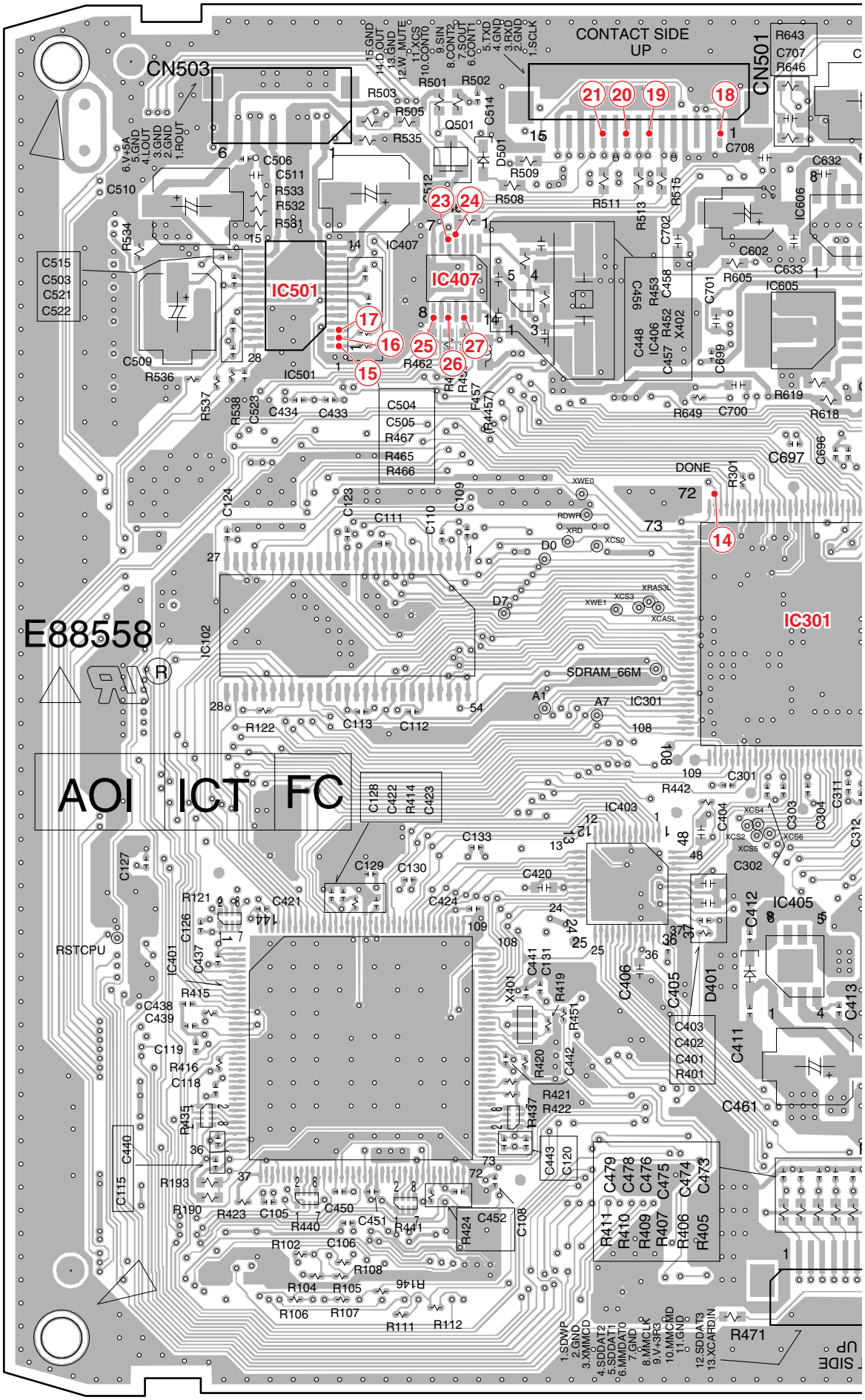

A

SIDE B

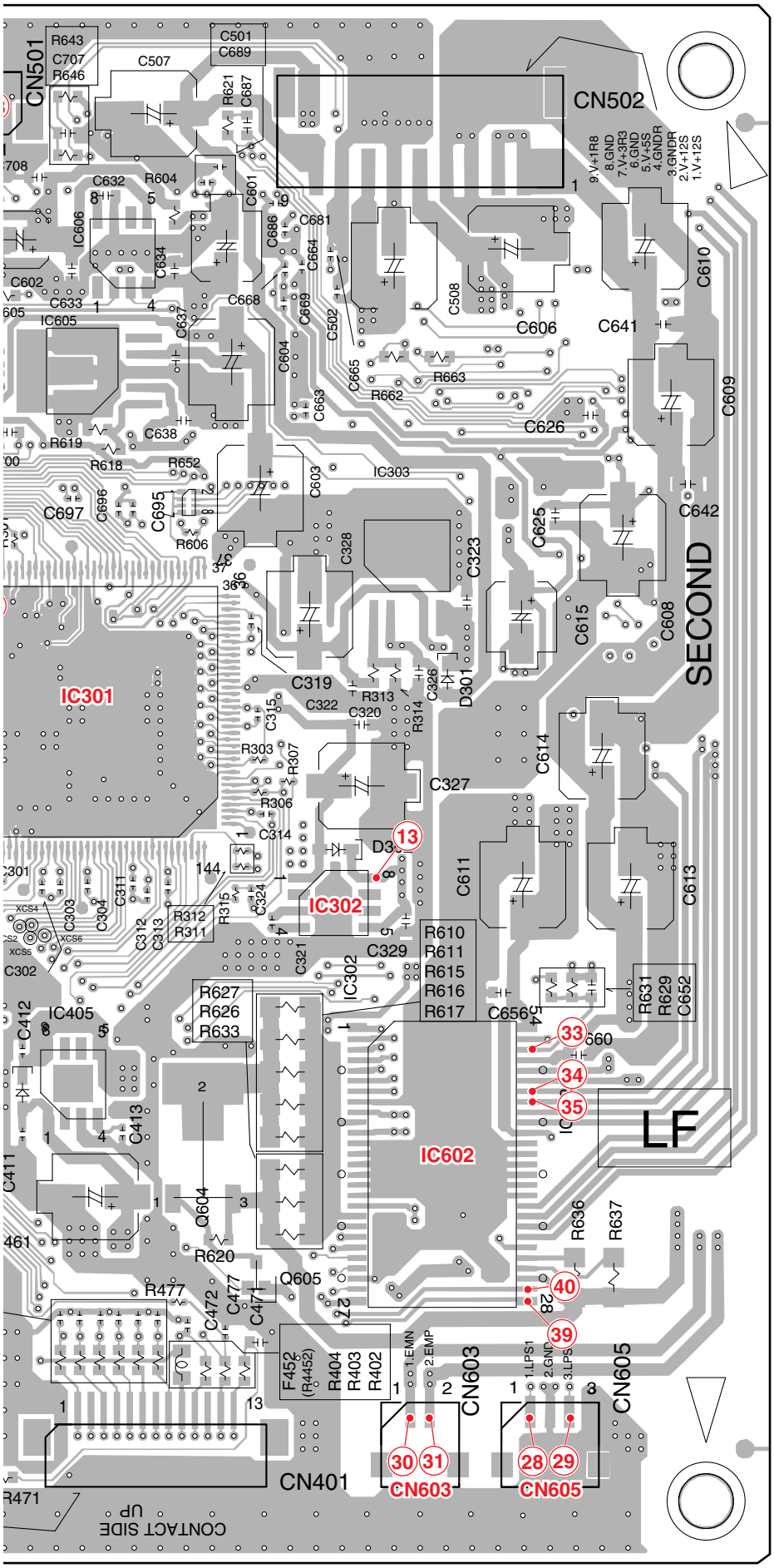

Note :
The encircled numbers denote measuring point.

(DNP2213-B)

A

SIDE B

G MFLB ASSY

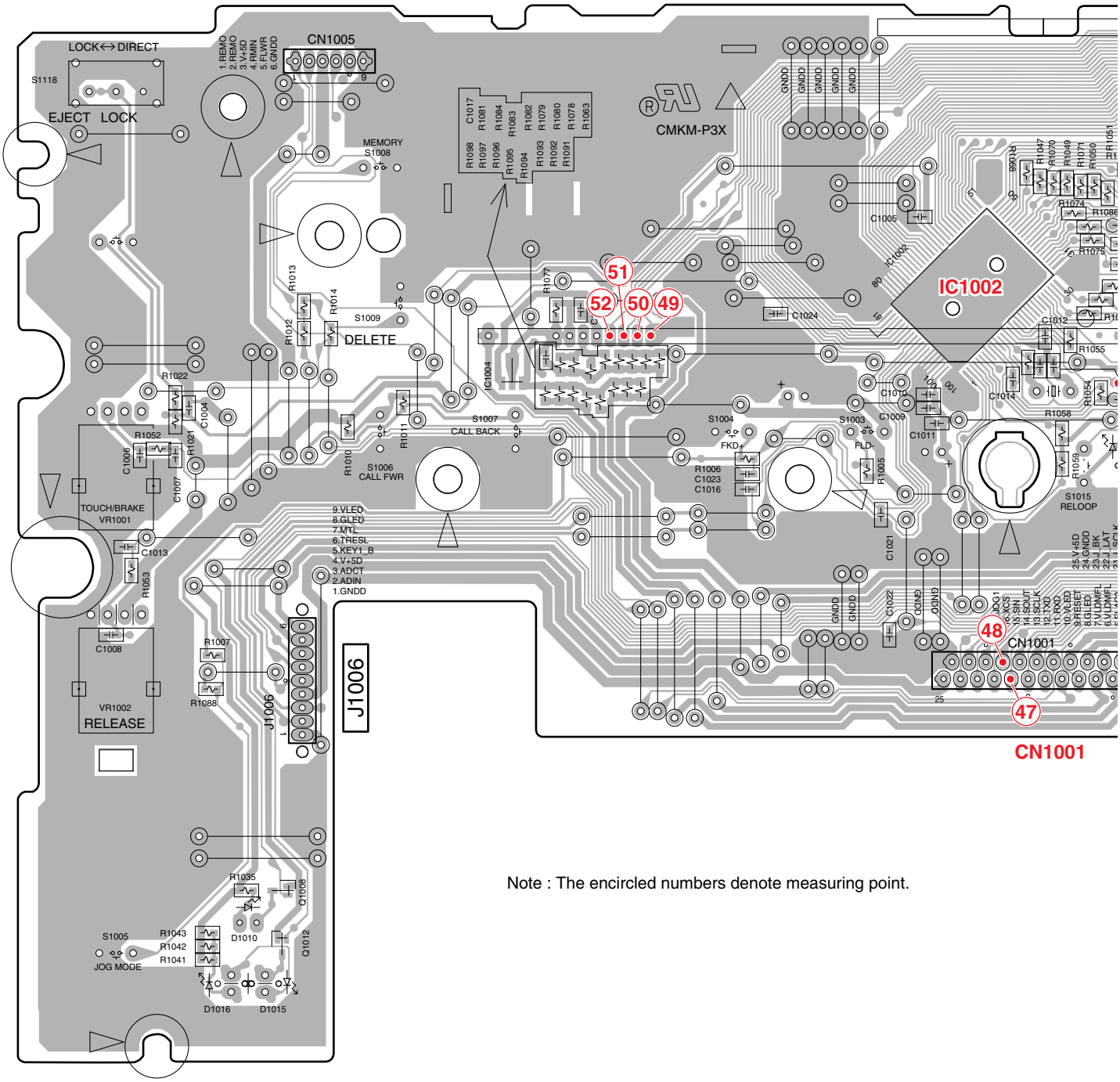

Note : The encircled numbers denote measuring point.

SIDE B

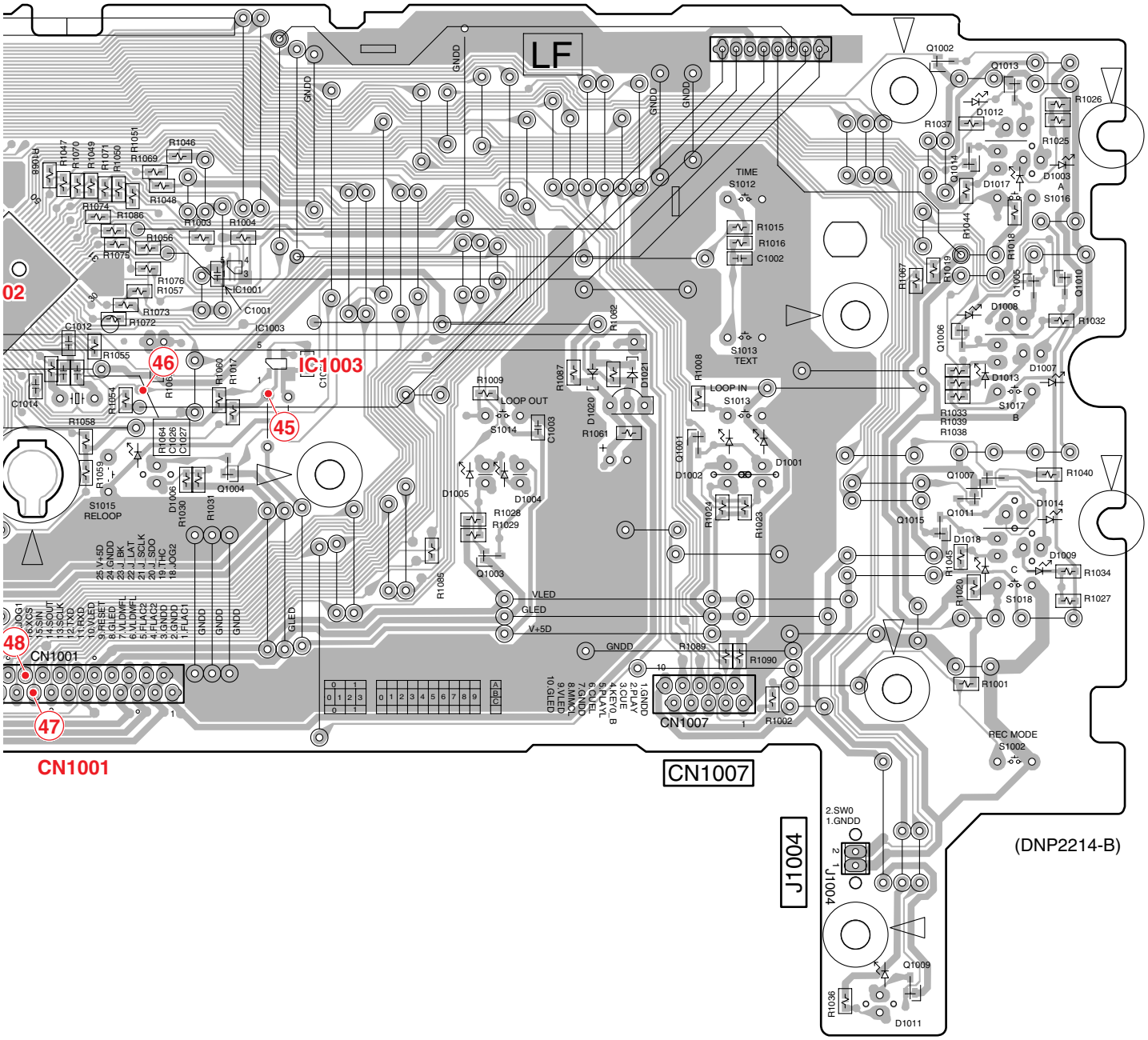
LF
IC1003
CN1001
CN1007
J1004
(DNP2214-B)
TIME
S1012
S1013
TEXT
LOOP IN
S1013
LOOP OUT
S1014
S1015
RELOOP
S1016
S1017
S1018
REC MODE
S1002
VLED
GLED
V+5D
GNDD
46
45
48
47

Note : The encircled numbers denote measuring point in the schematic diagram and pcb diagram.

G MFLB ASSY

Mode: PLAY

49 V1001 - 71 pin (SI)
V: 5V/div. H: 50µS/div.

50 V1001 - 72 pin (CLK)
V: 5V/div. H: 50µS/div.

51 V1001 - 73 pin (LAT)
V: 10V/div. H: 50µS/div.

52 V1001 - 74 pin (BK)
V: 10V/div. H: 50µS/div.

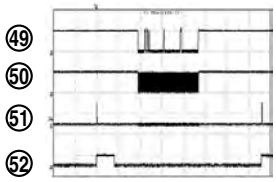

F MJCB ASSY

Mode: PLAY (1kHz, 0dB)

53 CN1506 - 1 pin (ROUT)
V: 1V/div. H: 500µS/div.

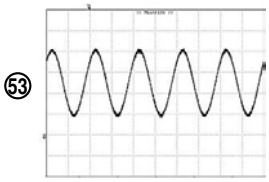

F MJCB ASSY

Mode: PLAY (1kHz, 0dB)

54 JA1502 - 1 pin (ROUT)
V: 2V/div. H: 500µS/div.

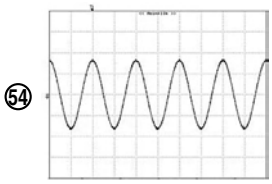

F MJCB ASSY

Mode: PLAY
Measurement condition:
Termination nothing, In case of 75 Ω termination, level becomes half (0.5V).

55 JA1503 (DOUT)
V: 0.2V/div. H: 500nS/div.

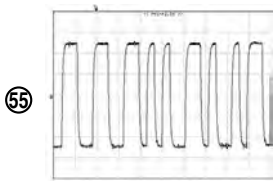

F MJCB ASSY

Mode: PLAY

56 CN1504 - 18 pin (FLAC1)
V: 5V/div. H: 5µS/div.

57 CN1504 - 16 pin (FLAC2)
V: 5V/div. H: 5µS/div.

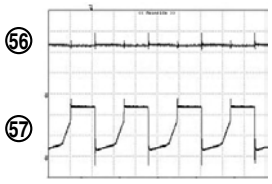

F MJCB ASSY

Mode: PLAY

58 CN1504 - 14 pin (FLAC3)
V: 5V/div. H: 5µS/div.

59 CN1504 - 12 pin (FLAC4)
V: 5V/div. H: 5µS/div.

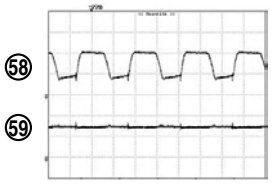

J JFLB ASSY

Mode: PLAY

60 V2001 - 24 pin (SI)
V: 5V/div. H: 100µS/div.

61 V2001 - 27 pin (CLK)
V: 5V/div. H: 100µS/div.

62 V2001 - 26 pin (LAT)
V: 5V/div. H: 100µS/div.

63 V2001 - 25 pin (BK)
V: 5V/div. H: 100µS/div.

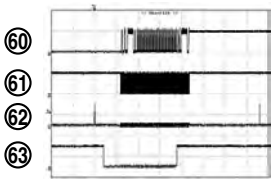

3.14 VOLTAGES

■ VOLTAGES

Voltage measurement condition: CD playback, CDJ, MASTER TEMPO: OFF , SLIDER: 0%

A 1/4 MAIN ASSY

• Remove CN401

IC101 (HD6417709SF133B-D)

Pin	Voltage (V)	Pin	Voltage (V)	Pin	Voltage (V)
1	3.31	72	0.085 to 0.095	143	0.011
2	3.30	73	0.34 to 0.37	144	3.31
3	1.754	74	0.52 to 0.85	145	1.751
4	0.010	75	0.43 to 0.56	146	0.816
5	1.754	76	0.9 to 1.4	147	0.009
6	0.009	77	0.17 to 0.41	148	0.008
7	0.008	78	0.42 to 0.61	149	0.008
8	3.31	79	0.008	150	1.751
9	3.31	80	0.015 to 0.018	151	0.011 to 0.035
10	3.31	81	1.749	152	0.009
11	3.31	82	0.02 to 0.08	153	0.009
12	2.370	83	0.008	154	1.751
13	3.31	84	0.13 to 0.16	155	0.009
14	3.31	85	3.31	156	0.009
15	3.31	86	0.008	157	0.009
16	3.31	87	2.63 to 2.66	158	0.008
17	3.31	88	3.31	159	0.015
18	3.31	89	1.7 to 2.2	160	3.26
19	0.008	90	2.20 to 2.30	161	0.009
20	3.31	91	3.31	162	1.675
21	3.31	92	0.055 to 0.110	163	3.31
22	3.31	93	3.22 to 3.25	164	0.010
23	3.31	94	3.31	165	3.31
24	3.31	95	0.008	166	0.15 to 0.26
25	3.31	96	3.31	167	0.009
26	3.31	97	3.31	168	3.31
27	0.008	98	3.0 to 3.3	169	0.008
28	3.31	99	1.9 to 2.1	170	0.008
29	1.752	100	3.31	171	3.31
30	0.011	101	0.033 to 0.080	172	3.31
31	0.011	102	3.31	173	0.008
32	0.011	103	3.30	174	3.31
33	0.008	104	3.30	175	1.751
34	0.63 to 0.84	105	3.31	176	3.31
35	3.31	106	0.11 to 0.15	177	3.31
36	1.57 to 1.65	107	3.31	178	0.009
37	1.53	108	2.657	179	3.27
38	0.64 to 1.2	109	0.009	180	3.30
39	0.5 to 1.2	110	0.009	181	0.008
40	1.27 to 1.31	111	3.31	182	0.008
41	1.3 to 1.4	112	0.010	183	3.31
42	1.39 to 1.41	113	3.31	184	0.008
43	1.39 to 1.43	114	0.010	185	3.31
44	1.40 to 1.54	115	3.28	186	3.31
45	0.008	116	3.31	187	0.011 to 0.017
46	1.50 to 1.52	117	3.31	188	3.31
47	3.31	118	3.31	189	3.31
48	0.95 to 1.10	119	3.31	190	0.008
49	1.1 to 1.3	120	3.31	191	3.31
50	1.43	121	3.31	192	0.015 to 0.055
51	1.47 to 1.53	122	3.31	193	3.31
52	1.38 to 1.40	123	3.30	194	3.31
53	0.53 to 0.75	124	3.31	195	0.008
54	1.80 to 1.85	125	2.540	196	3.31
55	1.69 to 1.74	126	3.31	197	0.008
56	1.67 to 1.73	127	3.31	198	0.009
57	0.008	128	3.31	199	3.31
58	1.42 to 1.63	129	3.31	200	0.009
59	3.31	130	0.008 to 0.030	201	0.035 to 0.150
60	1.38 to 1.53	131	0.016	202	3.31
61	1.33 to 1.42	132	0.009	203	3.31
62	0.90 to 0.96	133	3.31	204	3.31
63	0.85 to 0.91	134	1.751	205	3.31
64	0.85 to 1.16	135	3.31	206	3.31
65	1.0 to 1.4	136	3.31	207	3.31
66	0.55 to 0.74	137	3.31	208	0.008
67	0.82 to 0.93	138	3.31		
68	0.10 to 0.45	139	3.31		
69	0.008	140	3.31		
70	0.22 to 0.86	141	3.31		
71	3.31	142	3.31		

IC102 (K4S281632F-UC75)

Pin	Voltage (V)
1	3.31
2	1.45 to 1.49
3	3.31
4	1.30 to 1.35
5	1.46 to 1.49
6	0.008
7	1.19 to 1.22
8	1.0 to 1.2
9	3.31
10	1.2 to 1.6
11	1.48 to 1.52
12	0.008
13	0.5 to 0.9
14	3.31
15	2.19 to 2.24
16	3.19 to 3.24
17	2.65 to 2.68
18	3.09 to 3.12
19	2.01 to 2.03
20	0.1 to 0.4
21	0.1 to 0.4
22	0.55 to 0.71
23	1.80 to 1.82
24	1.69 to 1.73
25	1.71 to 1.73
26	1.52 to 1.63
27	3.31
28	0.008
29	1.43 to 1.53
30	1.39 to 1.50
31	0.90 to 0.94
32	0.85 to 0.92
33	0.84 to 0.95
34	0.9 to 1.2
35	0.80 to 0.87
36	0.085 to 0.093
37	3.31
38	1.642
39	2.20 to 2.23
40	0.14 to 0.20
41	0.009
42	1.42 to 1.45
43	3.31
44	1.35 to 1.43
45	1.32 to 1.38
46	0.009
47	1.02 to 1.13
48	0.9 to 1.1
49	3.31
50	1.54 to 1.56
51	1.64 to 1.69
52	0.009
53	0.65 to 0.80
54	0.009

• Remove CN401

IC103 (DYW1752)

Pin	Voltage (V)
1	0.34 to 0.40
2	0.085 to 0.092
3	0.3 to 0.9
4	0.10 to 0.42
5	0.78 to 0.87
6	0.54 to 0.67
7	1.03 to 1.08
8	0.85 to 0.91
9	0.16 to 0.42
10	0.43 to 0.52
11	2.22
12	3.31
13	0.11 to 0.16
14	0.11 to 0.14
15	3.31
16	0.7 to 1.0
17	0.44 to 0.52
18	0.85 to 0.92
19	0.9 to 1.2
20	1.3 to 1.5
21	1.37 to 1.53
22	1.48 to 1.62
23	1.52 to 1.73
24	1.71 to 1.80
25	1.80 to 1.86
26	3.31
27	0.008
28	3.31
29	1.45 to 1.46
30	1.41 to 1.48
31	1.31 to 1.36
32	1.34 to 1.42
33	1.44 to 1.47
34	0.6 to 1.4
35	1.17 to 1.26
36	1.01 to 1.12
37	3.31
38	0.99 to 1.05
39	0.91 to 1.07
40	1.50 to 1.53
41	1.43 to 1.58
42	1.48 to 1.50
43	1.53 to 1.65
44	0.52 to 0.81
45	0.66 to 0.94
46	0.009
47	3.31
48	0.53 to 0.70

A 2/4 MAIN ASSY

IC301 (XC3S50-4TQG144C)

Pin	Voltage (V)	Pin	Voltage (V)
1	0.009	73	0.115
2	3.31	74	2.22 to 2.24
3	3.31	75	3.31
4	3.31	76	3.245
5	3.31	77	3.1 to 3.3
6	0.	78	1.44 to 1.47
7	3.31	79	1.28 to 1.37
8	3.31	80	1.43 to 1.46
9	0.009	81	0.008
10	3.31	82	1.16 to 1.29
11	3.31	83	0.97 to 1.20
12	1.74 to 1.79	84	1.53 to 1.55
13	1.87 to 1.91	85	1.47 to 1.51
14	1.66 to 1.77	86	0.5 to 0.8
15	3.31	87	2.21 to 2.30
16	0.009	88	0.008
17	3.31	89	1.39 to 1.41
18	0 to 0.6	90	1.32 to 1.39
19	3.31	91	3.31
20	0 to 0.6	92	1.27 to 1.32
21	0 to 0.5	93	1.00 to 1.09
22	0.009	94	0.008
23	0 to 0.6	95	0.9 to 1.0
24	0 to 0.6	96	1.52 to 1.53
25	0 to 0.6	97	1.59 to 1.61
26	0 to 0.6	98	0.63 to 0.82
27	0 to 0.6	99	1.80 to 1.85
28	0 to 0.5	100	1.69 to 1.76
29	0.009	101	0.008
30	0 to 3.31	102	1.58 to 1.73
31	0 to 0.6	103	1.47 to 1.63
32	0 to 0.6	104	1.37 to 1.53
33	0 to 0.6	105	1.35 to 1.50
34	3.31	106	3.31
35	0 to 3.31	107	0.90 to 0.94
36	0 to 0.6	108	0.85 to 0.93
37	2.520	109	2.517
38	2.520	110	2.517
39	2.520	111	2.517
40	0 to 0.6	112	0.55 to 0.72
41	1.2 to 1.6	113	0.95 to 1.10
42	0.009	114	0.009
43	3.31	115	3.31
44	2.368	116	0.84 to 0.87
45	0.009	117	0.008
46	2.5 to 2.9	118	0.009
47	3.166	119	3.31
48	2.520	120	2.522
49	1.211	121	1.211
50	0.009	122	3.31
51	0.044 to 0.046	123	3.31
52	0.044 to 0.046	124	2.63 to 2.67
53	0.044 to 0.046	125	0.006
54	3.31	126	3.31
55	0.044 to 0.046	127	3.1 to 3.3
56	1.651	128	3.31
57	0.010	129	3.31
58	3.31	130	3.31
59	1.663	131	0 to 0.2
60	1.907	132	3.28
61	1.211	133	1.210
62	2.521	134	2.520
63	3.202	135	3.30
64	0.009	136	0.008
65	0.010	137	2.3 to 3.3
66	3.31	138	3.31
67	0.009	139	0.009
68	3.31	140	0.346
69	3.31	141	3.31
70	3.31	142	0.009
71	2.540	143	2.521
72	2.522	144	2.518

IC501 (PE8001A)

Pin	Voltage (V)
1	1.661
2	0.77 to 0.85
3	1.650
4	2.254
5	1.634
6	2.814
7	0.009
8	5.00
9	5.00
10	0.001
11	2.504
12	0 to 0.08
13	2.517
14	0.009
15	5.00
16	2.514
17	0 to 0.03
18	2.503
19	0
20	5.00
21	4.99
22	5.00
23	0.010
24	4.98
25	4.98
26	0.011
27	3.31
28	3.31

A 3/4 MAIN ASSY

IC401 (TMS320DA150PGE16D)

Pin	Voltage (V)	Pin	Voltage (V)
1	0.008	73	1.43 to 1.51
2	0.008	74	1.47 to 1.50
3	0.008	75	3.31
4	3.31	76	0.009
5	0.55 to 0.65	77	0.009
6	0.009	78	0.009
7	0.82 to 1.10	79	3.31
8	3.30	80	2.807
9	0.007	81	3.31
10	0.007	82	0.011
11	0.008	83	3.31
12	1.626	84	3.31
13	3.31	85	1.23 to 1.25
14	0.008	86	3.30
15	0.008	87	0.012
16	1.626	88	3.30
17	3.31	89	3.30
18	3.20 to 3.25	90	0.009
19	3.31	91	1.625
20	3.31	92	2.802
21	3.31	93	0.009
22	3.31	94	3.31
23	3.31	95	0.011
24	3.31	96	0.713
25	3.31	97	1.042
26	3.31	98	3.31
27	3.31	99	1.44 to 1.46
28	3.31	100	1.28 to 1.33
29	3.31	101	1.42 to 1.46
30	3.31	102	1.17 to 1.29
31	3.31	103	0.98 to 1.14
32	0.008	104	1.52 to 1.54
33	3.31	105	0.53 to 0.57
34	0.008	106	0.009
35	3.31	107	0.38 to 0.48
36	1.25 to 1.30	108	0.009
37	0.008	109	0.009
38	1.24 to 1.27	110	0.008
39	0.008	111	0.008
40	0.008	112	3.31
41	1.32 to 1.38	113	1.46 to 1.49
42	1.22 to 1.30	114	0.5 to 0.8
43	1.23 to 1.25	115	1.40 to 1.45
44	1.23 to 1.25	116	1.33
45	3.31	117	1.28 to 1.35
46	0.008	118	0.99 to 1.15
47	3.31	119	0.92 to 1.09
48	0.015	120	0.010
49	1.28	121	1.50 to 1.54
50	0.008	122	1.62 to 1.68
51	0.009	123	0.65 to 0.81
52	1.626	124	0.010
53	3.31	125	1.626
54	1.26 to 1.28	126	0.009
55	3.31	127	3.31
56	3.31	128	0.009
57	0.008	129	3.31
58	3.31	130	3.31
59	0.009	131	1.80 to 1.86
60	0.009	132	1.69 to 1.75
61	3.31	133	1.34 to 1.73
62	0.008	134	1.45 to 1.63
63	0.008	135	0.010
64	0.009	136	1.42 to 1.53
65	0.009	137	1.3 to 1.5
66	0.009	138	0.90 to 0.94
67	0.008	139	0.85 to 0.87
68	1.626	140	0.85 to 0.93
69	3.30	141	0.95 to 1.12
70	0.008	142	1.628
71	1.25 to 1.27	143	0.009
72	0.008	144	0.009

• Remove CN401

IC402 (DSPD56367PV150)

Pin	Voltage (V)	Pin	Voltage (V)
1	2.23 to 2.26	73	0.008
2	1.17 to 1.22	74	3.31
3	1.00 to 1.04	75	0.008
4	0.008	76	0.008
5	0.008	77	0.008
6	0.045 to 0.046	78	0.008
7	0.045 to 0.046	79	0.008
8	3.31	80	3.31
9	0.009	81	0.009
10	0.045 to 0.046	82	0.009
11	0.044 to 0.046	83	0.009
12	1.661	84	0.009
13	1.664	85	0.009
14	1.65	86	3.31
15	1.927	87	0.009
16	1.625	88	0.009
17	3.204	89	0.009
18	1.753	90	0.009
19	0.009	91	1.757
20	3.31	92	0.008
21	3.31	93	0.008
22	3.31	94	0.008
23	0.012	95	3.31
24	0.009	96	0.008
25	3.31	97	0.008
26	0.009	98	0.008
27	1.681	99	0.008
28	0.009	100	0.013 to 0.015
29	0.009	101	0.013
30	3.31	102	0.020 to 0.100
31	1.68 to 1.75	103	3.31
32	1.81 to 1.84	104	0.008
33	0.75	105	0 to 0.07
34	0.39 to 0.78	106	0.019
35	1.47 to 1.48	107	0.015 to 0.017
36	1.52 to 1.53	108	0.015 to 0.017
37	0.6 to 1.4	109	0.012
38	3.31	110	0.013
39	0.008	111	3.31
40	1.19 to 1.30	112	0.008
41	1.47 to 1.49	113	0.013
42	1.38 to 1.45	114	0.012
43	1.47 to 1.49	115	0.012
44	3.31	116	0.012
45	1.759	117	0.012
46	0.383	118	0.012
47	0.008	119	3.31
48	0.115	120	0.008
49	3.31	121	0.012
50	0.009	122	0.012
51	0.60 to 0.72	123	0.012
52	1.1 to 1.2	124	0.012
53	0.009	125	0.012
54	0.008	126	1.756
55	1.629	127	0.008
56	1.756	128	0.012
57	3.31	129	3.31
58	0.008	130	0.008
59	1.663	131	0.013
60	1.896	132	0.019
61	0.008	133	0.013
62	0.008	134	3.30
63	3.31	135	3.30
64	3.30	136	0.010
65	3.31	137	0.009
66	0.008	138	0.009
67	0.46 to 0.52	139	0.30 to 0.32
68	0.61 to 0.68	140	0.010 to 0.060
69	0.48 to 0.52	141	3.25
70	0.43 to 0.52	142	3.29
71	0.008	143	0.34 to 0.39
72	0.008	144	1.54

IC403 (TE4300PF)

Pin	Voltage (V)
1	1.51 to 1.63
2	1.53 to 1.72
3	1.69 to 1.75
4	1.80 to 1.81
5	0.5 to 0.8
6	0.009
7	0.66 to 0.85
8	1.62 to 1.69
9	1.52 to 1.56
10	0.9 to 1.1
11	0.9 to 1.2
12	3.31
13	1.29 to 1.34
14	1.33 to 1.41
15	1.41 to 1.46
16	0.1 to 0.6
17	0.44 to 0.52
18	0.009
19	3.31
20	1.52 to 1.55
21	1.00 to 1.17
22	1.18 to 1.23
23	1.45 to 1.48
24	1.31 to 1.35
25	1.45 to 1.47
26	3.31
27	3.31
28	3.31
29	3.31
30	3.31
31	0.009
32	3.31
33	3.31
34	3.31
35	0.010
36	0.079
37	3.31
38	1.660
39	3.31
40	3.31
41	3.31
42	0.008
43	3.31
44	3.31
45	3.31
46	3.31
47	3.31
48	3.31

G MFLB ASSY

IC1002 (PEG237A)

Pin	Voltage (V)	Pin	Voltage (V)
1	1.936	51	0.008
2	5.02	52	0.008
3	5.02	53	0.008
4	5.02	54	0.008
5	0.007	55	0.008
6	0.018	56	0.008
7	0.007	57	0.007
8	0.004	58	0.007
9	0.004	59	0.007
10	0.004	60	0.007
11	0.004	61	0.007
12	5.02	62	5.02
13	2.558	63	0.005
14	0.004	64	0.004
15	2.328	65	0.005
16	5.02	66	0.005
17	5.02	67	0.006
18	5.02	68	0.006
19	5.02	69	5.01
20	5.02	70	5.01
21	5.02	71	0.006
22	5.02	72	5.01
23	5.02	73	0.268
24	5.02	74	5.01
25	0.018	75	0.004
26	0 to 5.02	76	0.004
27	0.014 to 0.017	77	0.004
28	3.96	78	0.004
29	0.008	79	0.004
30	1.3 to 1.7	80	0.004
31	0.64 to 0.65	81	5.02
32	5.01	82	5.02
33	4.10	83	5.02
34	5.01	84	5.02
35	0.44 to 0.47	85	5.02
36	1.8 to 2.2	86	5.02
37	4.78	87	5.02
38	3.59	88	5.02
39	5.02	89	2.215
40	0.009	90	2.121
41	0.004	91	5.01
42	0.024	92	5.01
43	0.608	93	5.01
44	0.016	94	0.004
45	2.821	95	0.004
46	5.02	96	0.004
47	5.01	97	0.004
48	5.01	98	5.03
49	0.009	99	5.03
50	0.008	100	0.004

4. PCB CONNECTION DIAGRAM

NOTE FOR PCB DIAGRAMS :

1. Part numbers in PCB diagrams match those in the schematic diagrams.
2. A comparison between the main parts of PCB and schematic diagrams is shown below.

Symbol In PCB Diagrams	Symbol In Schematic Diagrams	Part Name
B C E	B C E B C E	Transistor
B C E	B C E B C E	Transistor with resistor
D G S	D G S D G S	Field effect transistor
		Resistor array
		3-terminal regulator

3. The parts mounted on this PCB include all necessary parts for several destinations.
   For further information for respective destinations, be sure to check with the schematic diagram.
4. View point of PCB diagrams.

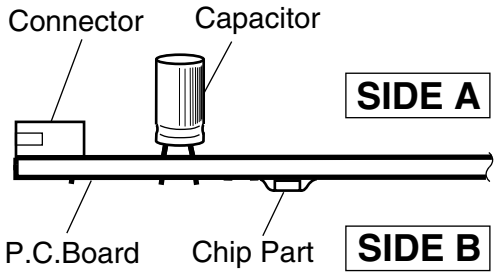

4.1 MAIN ASSY

SIDE A

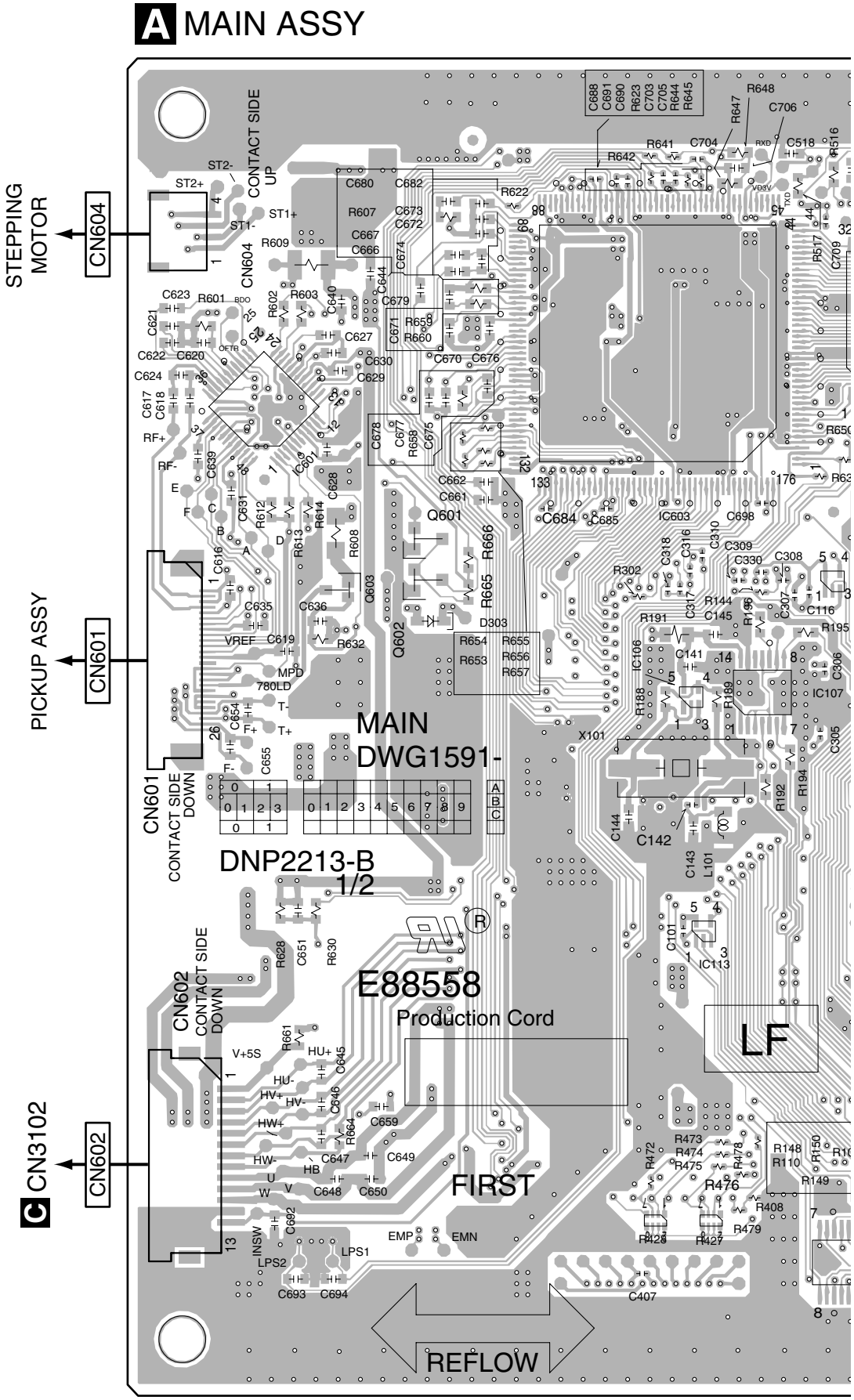

SIDE A

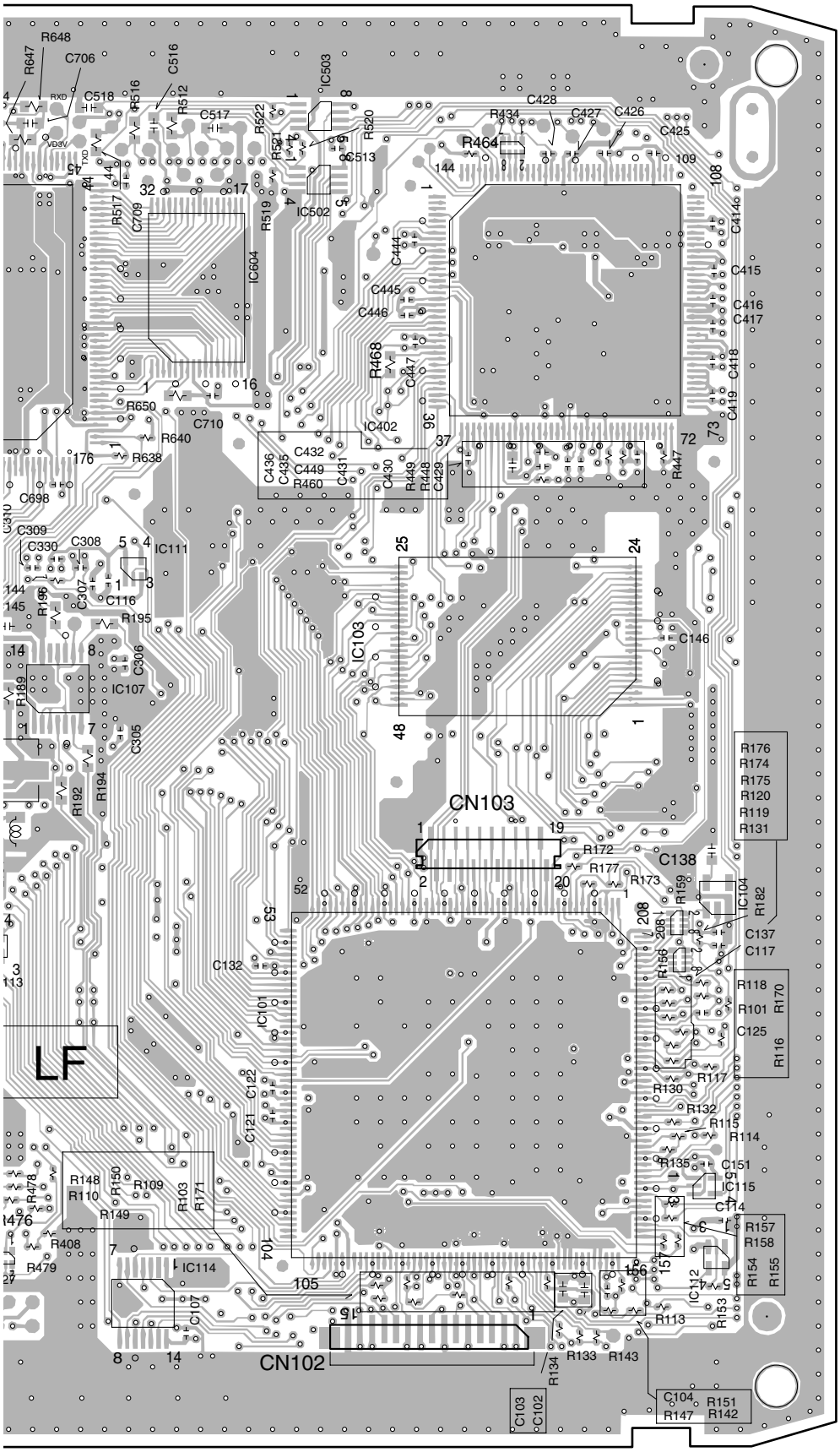

(DNP2213-B)

IC503

IC502

IC603 IC604 IC402

IC601

Q601

Q602
Q603 IC111

IC103

IC106 IC107

IC104

IC113

IC101

IC115

IC112

IC114

A

SIDE B

A MAIN ASSY

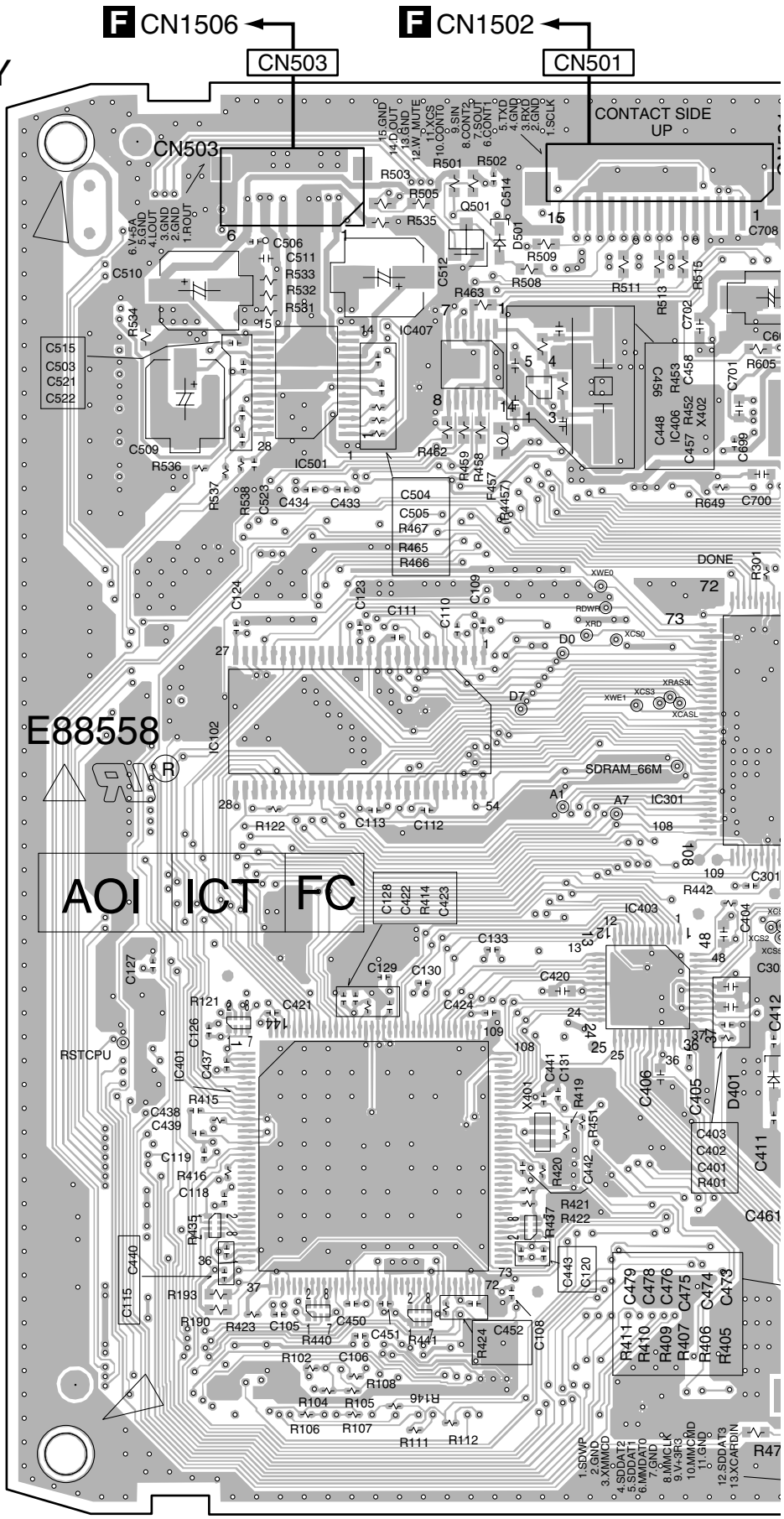

SIDE B

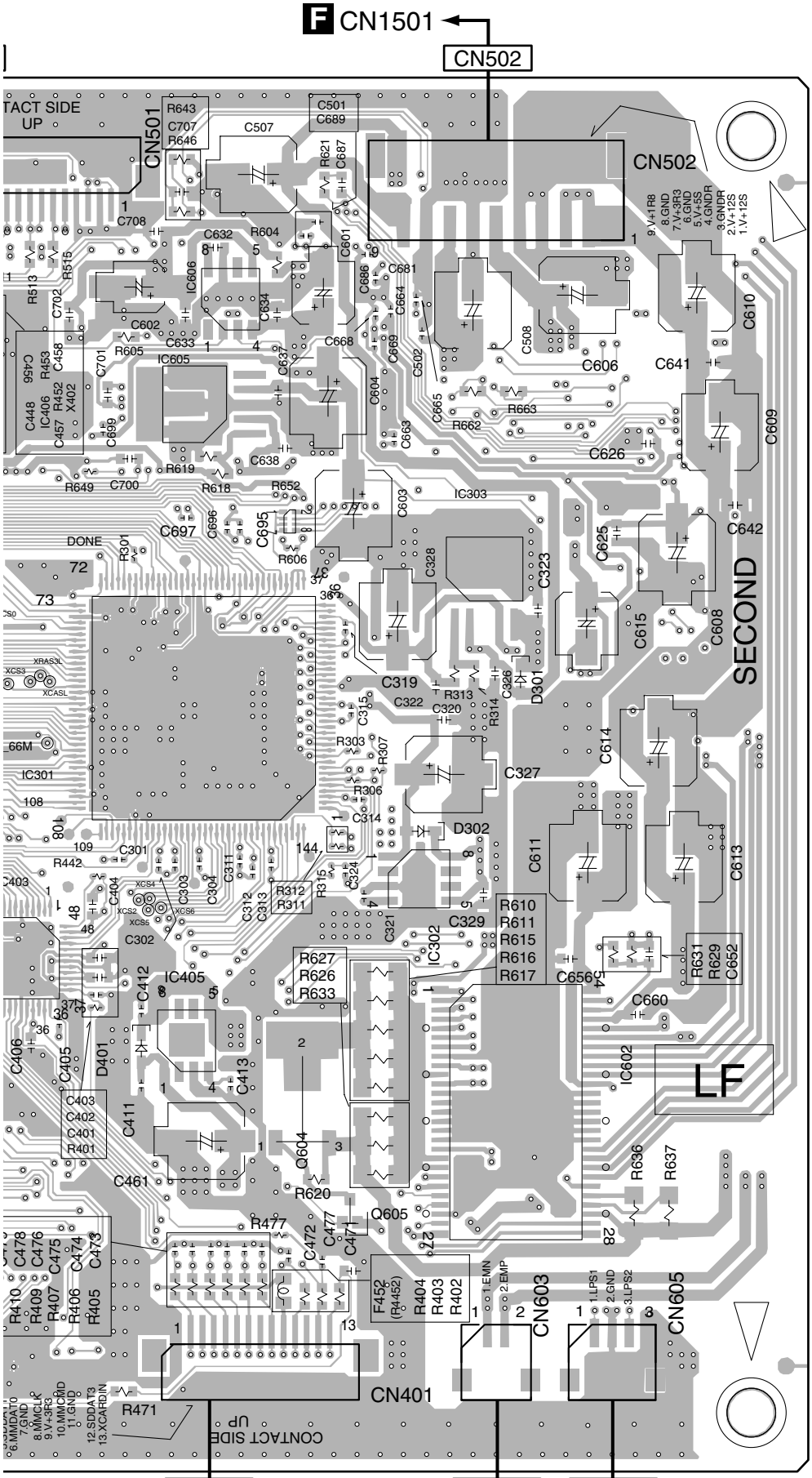

Q501
IC606
IC407
IC501 IC406
IC605
IC303
IC102
IC301
IC302
IC403
IC405
IC602
IC401 Q604
Q605

(DNP2213-B)

A

4.2 SLMB, SPCN, INSW and SDCB ASSYS

SIDE A

SIDE A

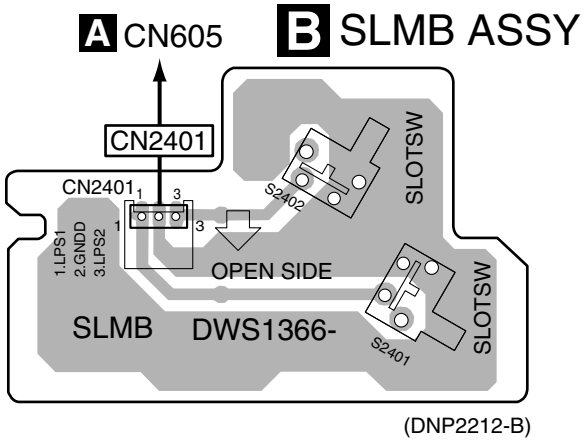

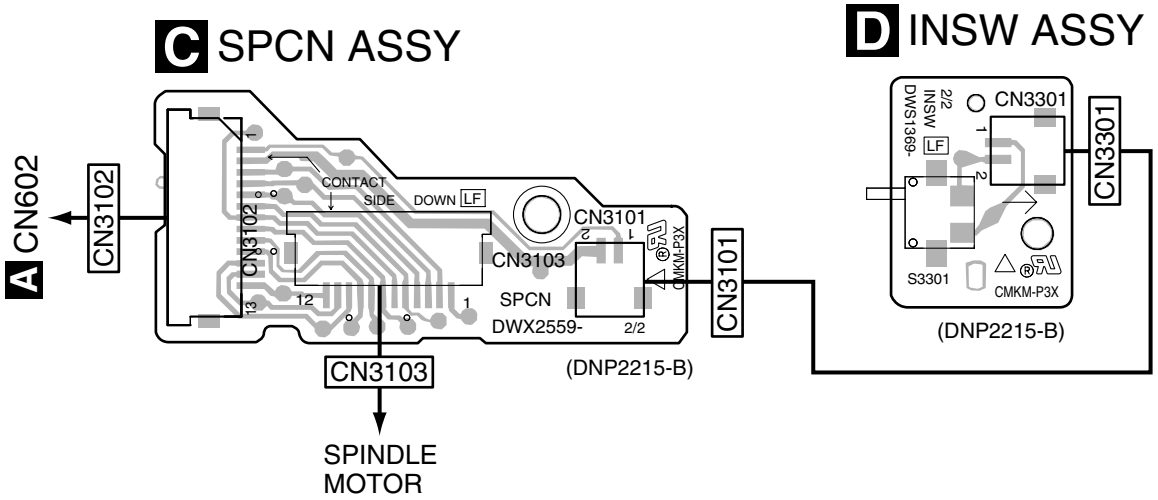

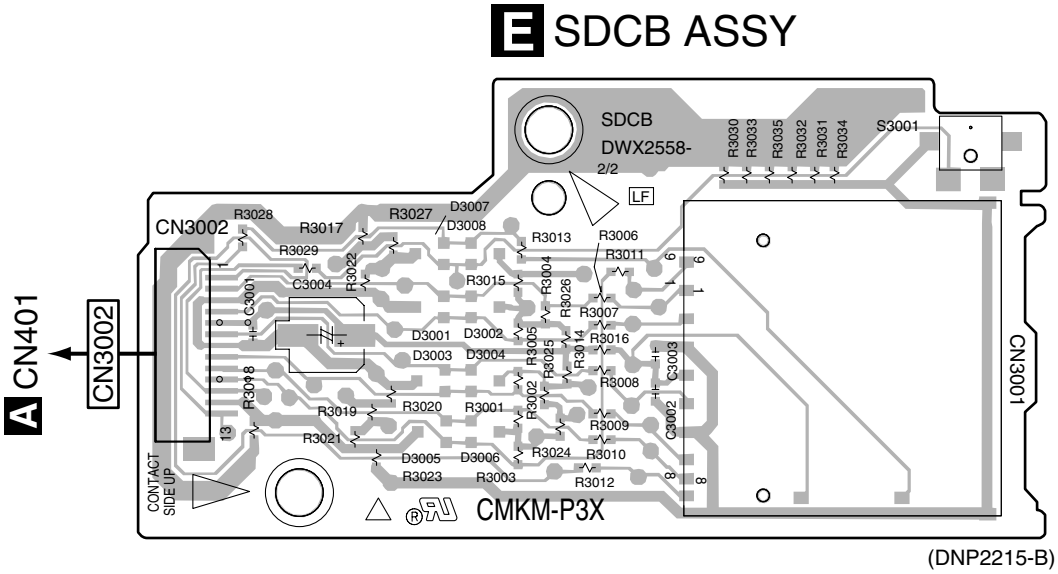

B C D E

SIDE B

SIDE B

A

B SLMB ASSY

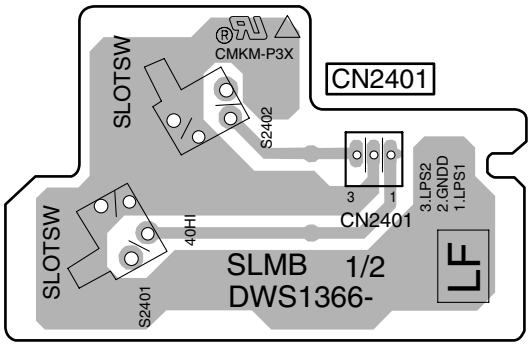

(DNP2212-B)

B

C

D

E

F

B

4.3 MJCB ASSY

SIDE A

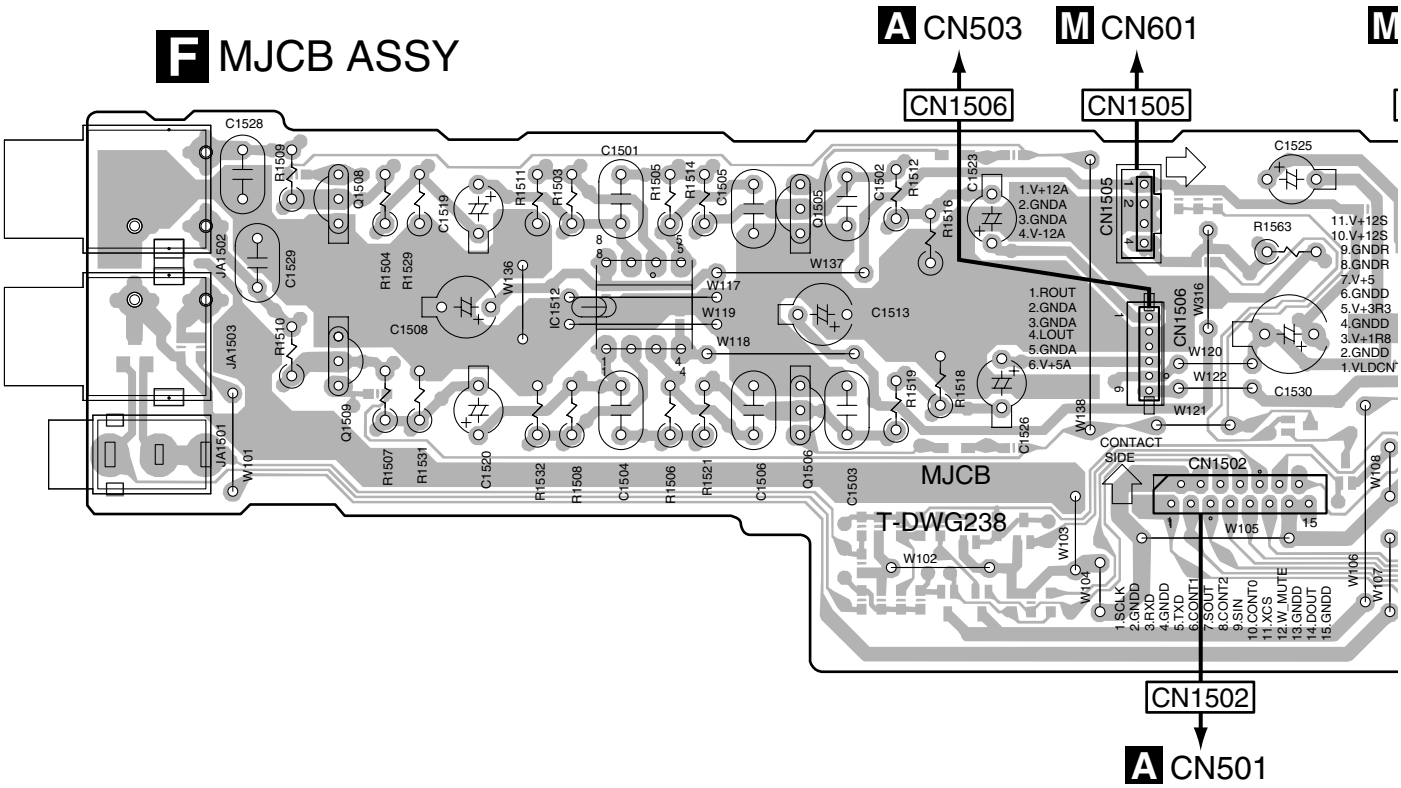

Q1508 IC1512 Q1505
Q1509 Q1506

SIDE B

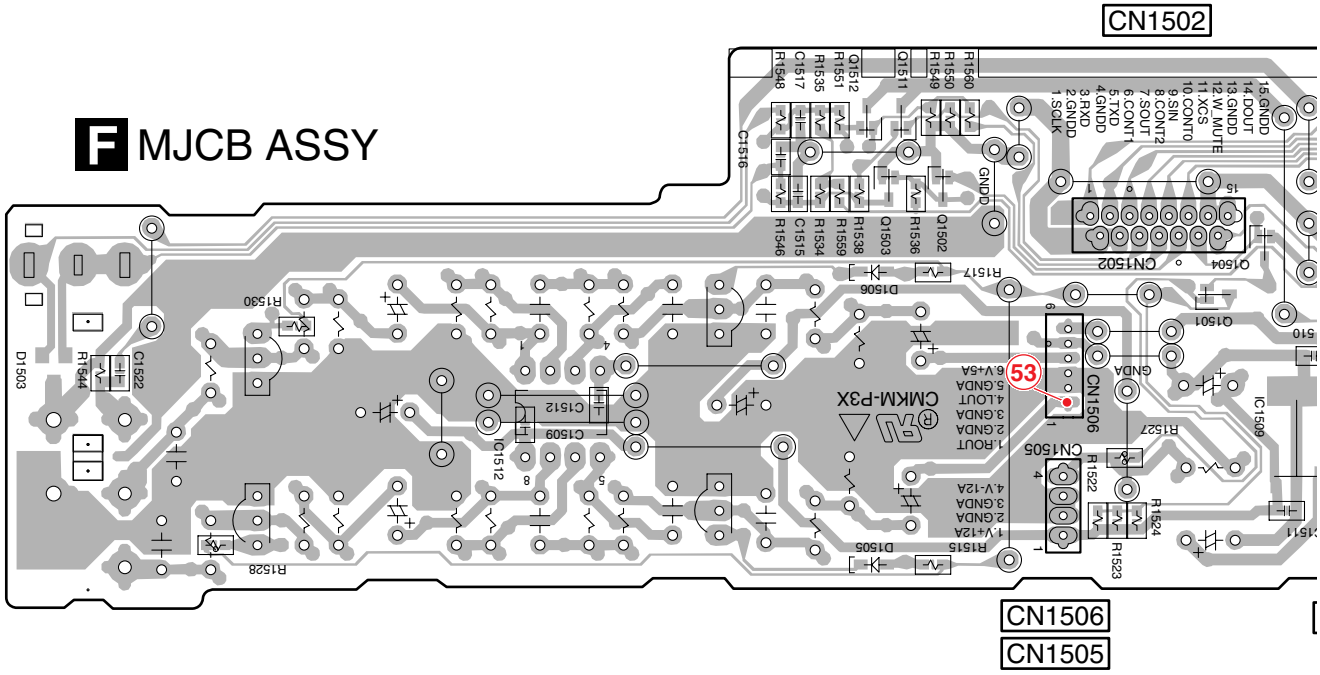

IC101 Q1512 Q1511 Q1504
Q1503 Q1502 Q1501 IC150

SIDE A

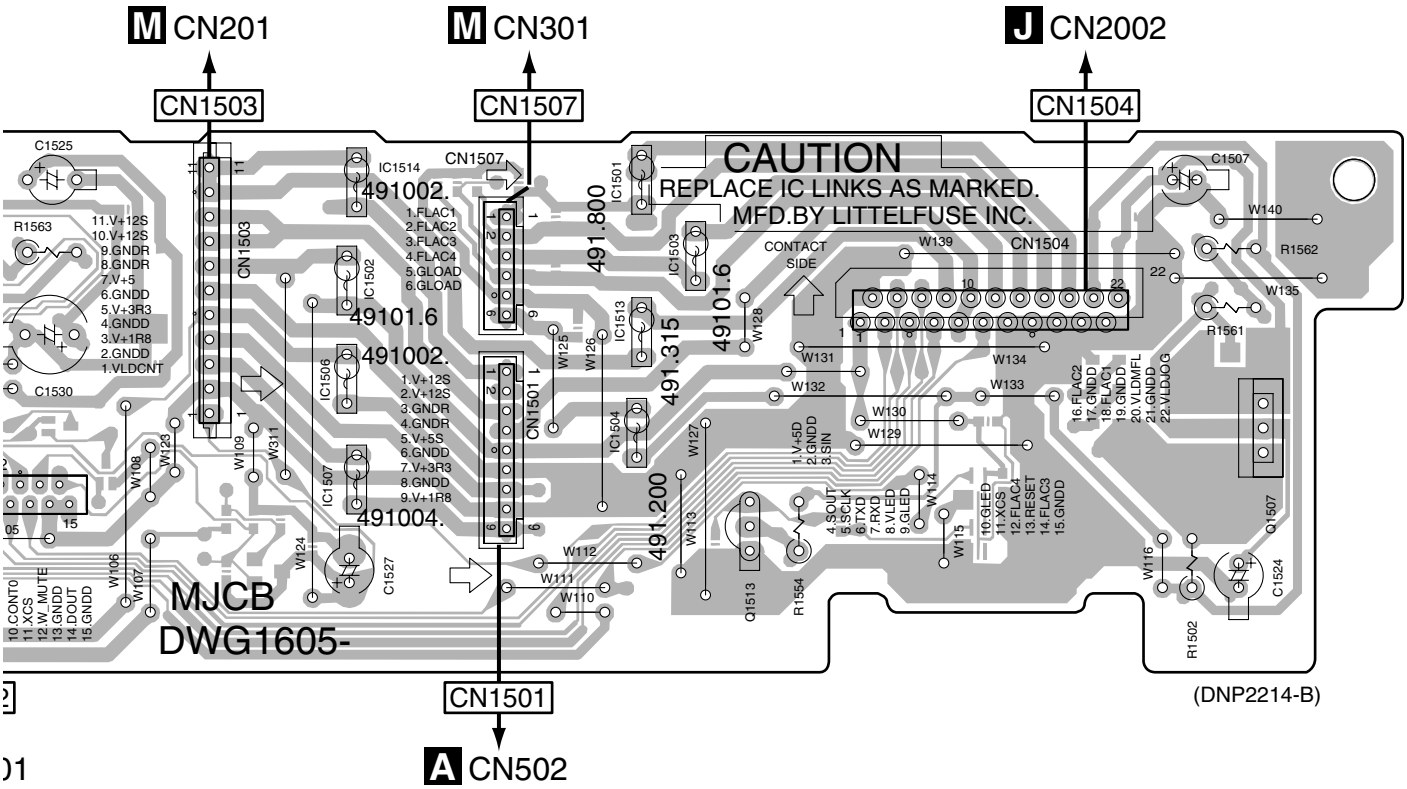

IC1502 IC1514
IC1506 IC1507

IC1501 IC1503
IC1513 Q1513
IC1504

Q1507

SIDE B

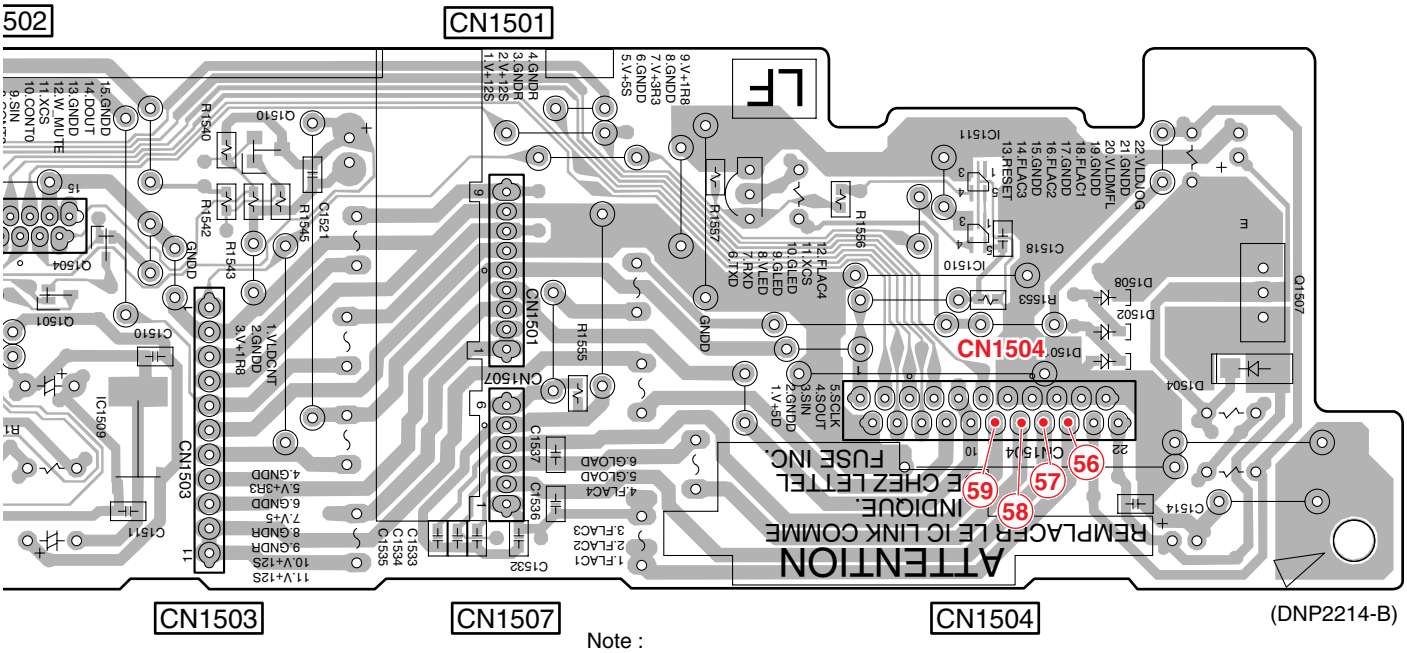

Note :
The encircled numbers denote measuring point.

Q1504 Q1510
Q1501 IC1509

IC1511
IC1510

Q1507

4.4 MFLB and RSWB ASSYS

SIDE A

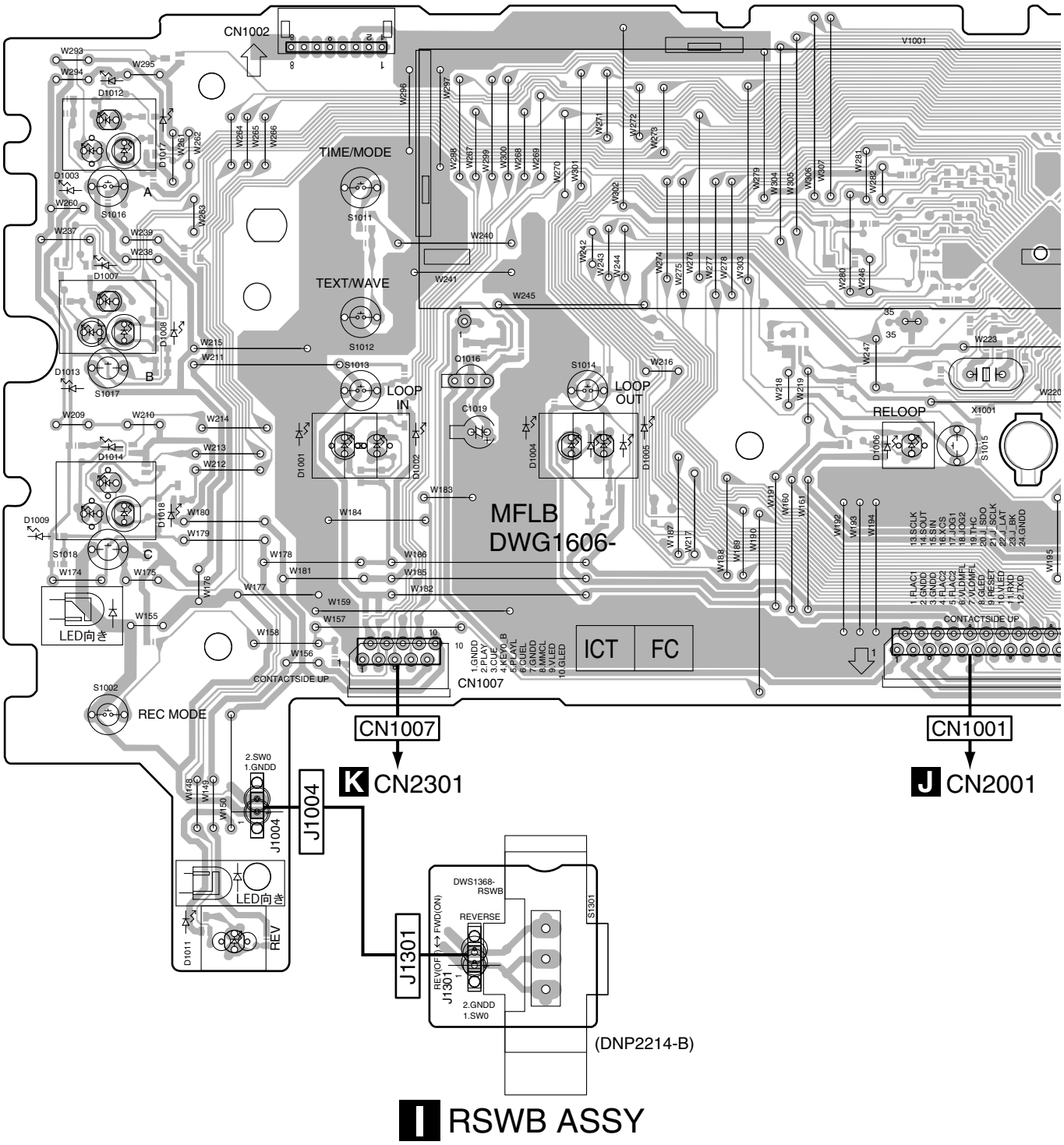

SIDE A

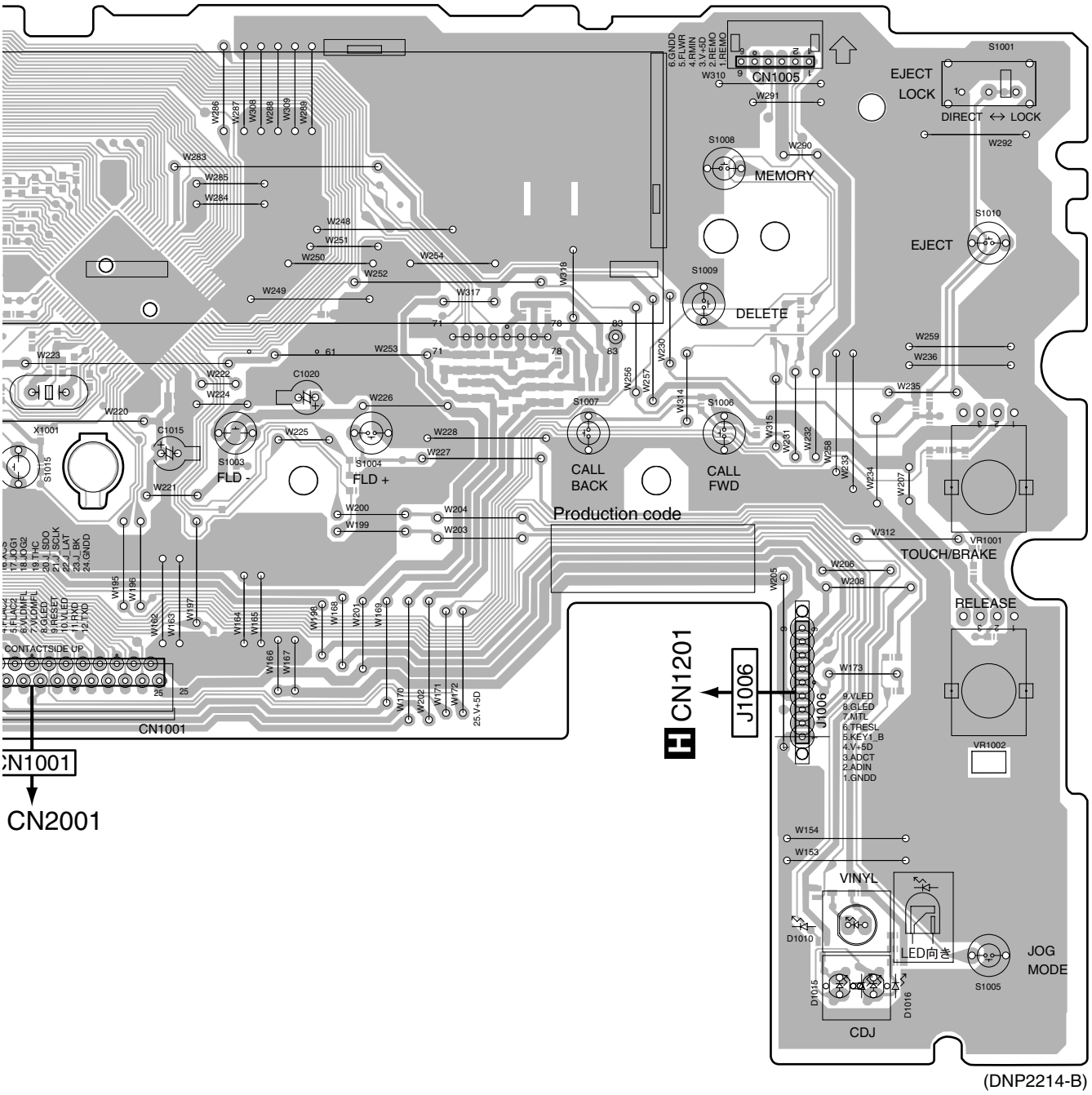

(DNP2214-B)

SIDE B

Q1008
Q1012
IC1004
IC1002
VR1001
VR1002

G MFLB ASSY

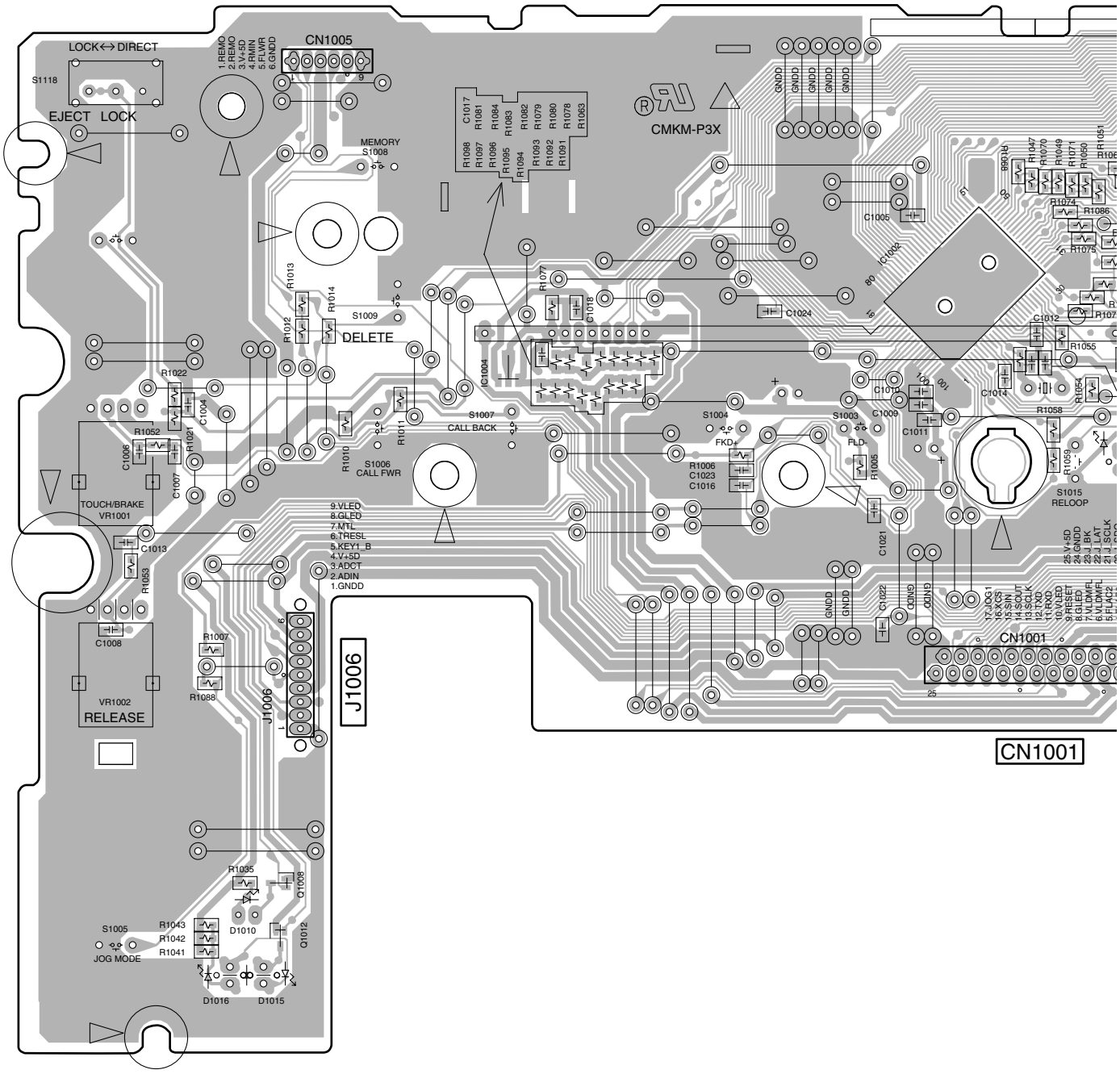

SIDE B

Q1002 Q1013
Q1014
Q1006 Q1005 Q1010
Q1007
Q1011
IC1001
IC1003
Q1001
Q1015
Q1004
Q1003
Q1009

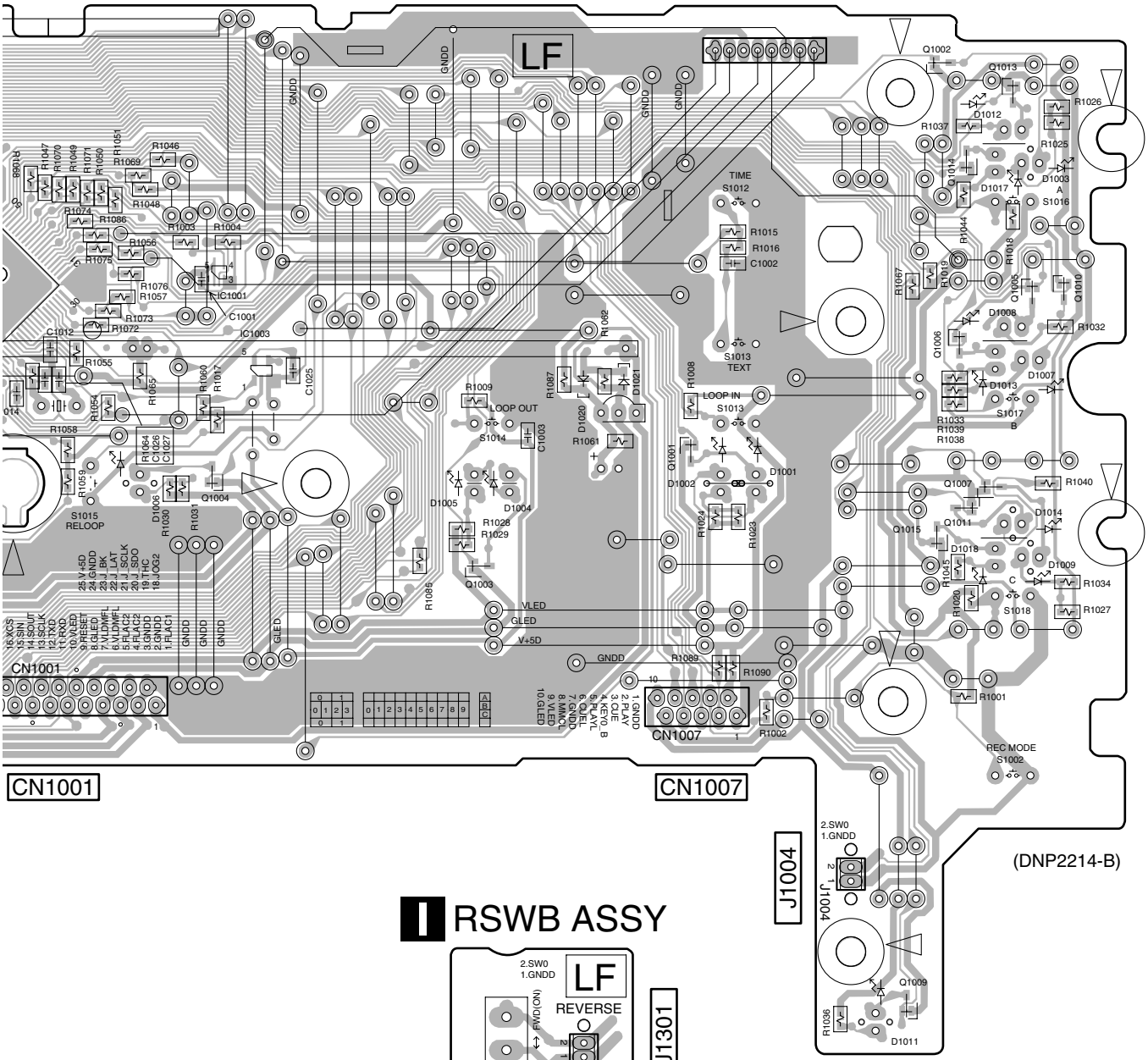

I RSWB ASSY

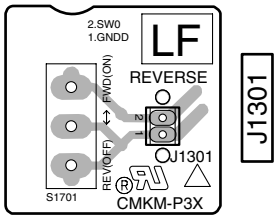

(DNP2214-B)

4.5 SLDB ASSY

SIDE A

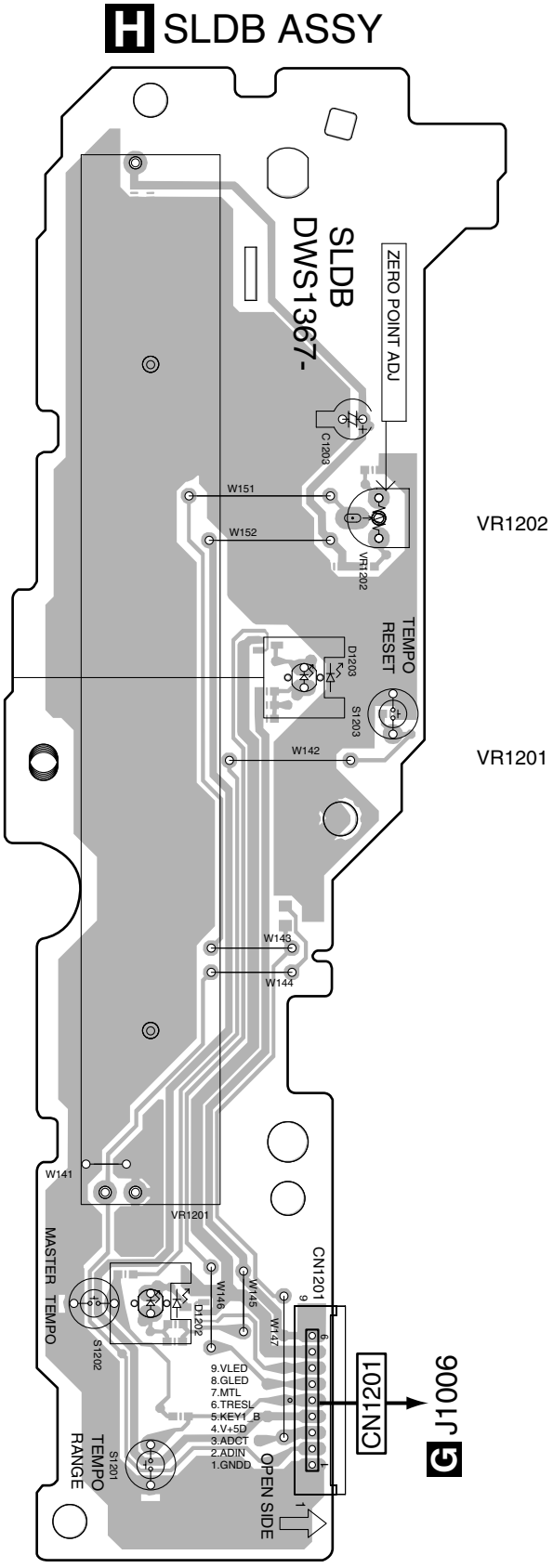

(DNP2214-B)

SIDE B

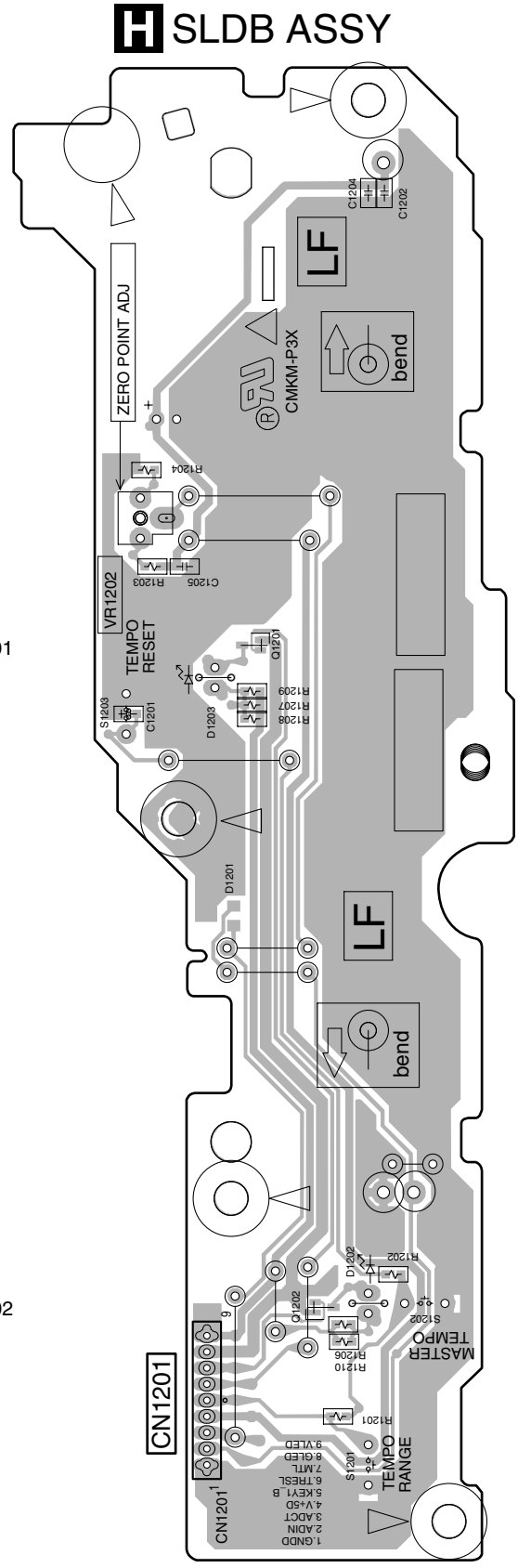

(DNP2214-B)

4.6 KSWB ASSY

SIDE A

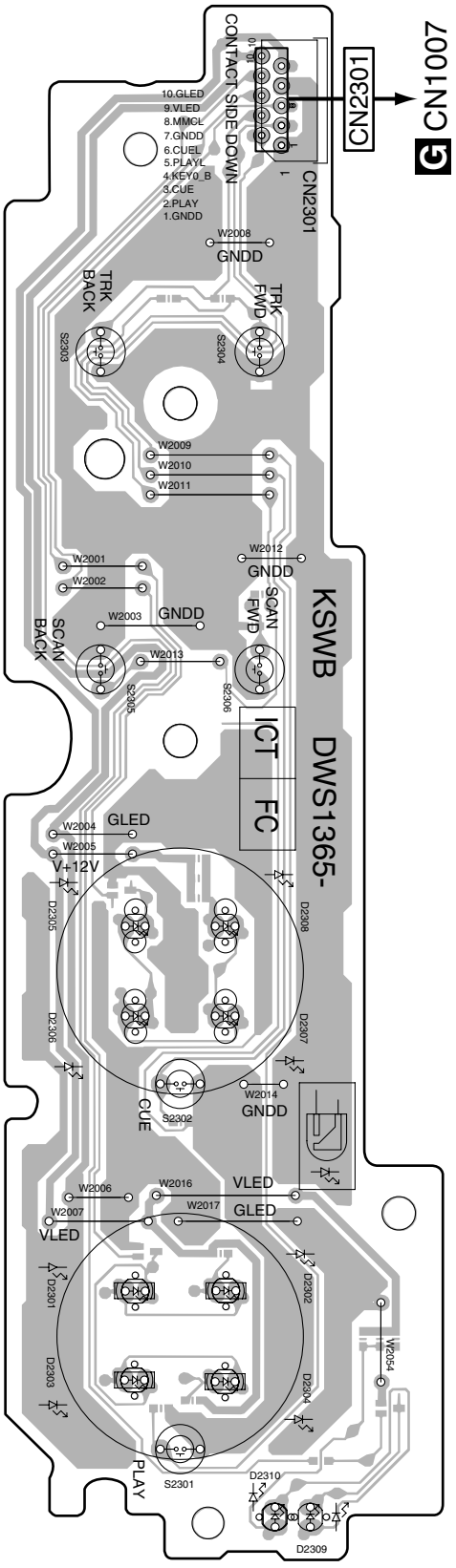

(DNP2212-B)

SIDE B

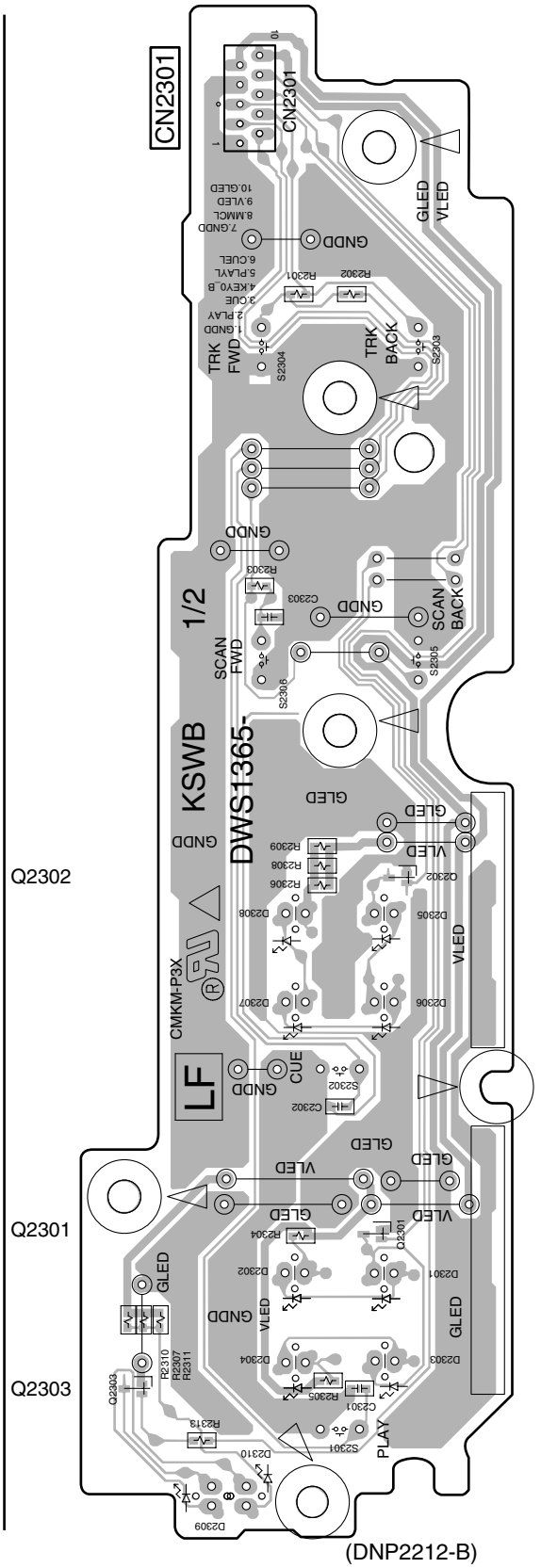

(DNP2212-B)

4.7 JFLB and JOGB ASSYS

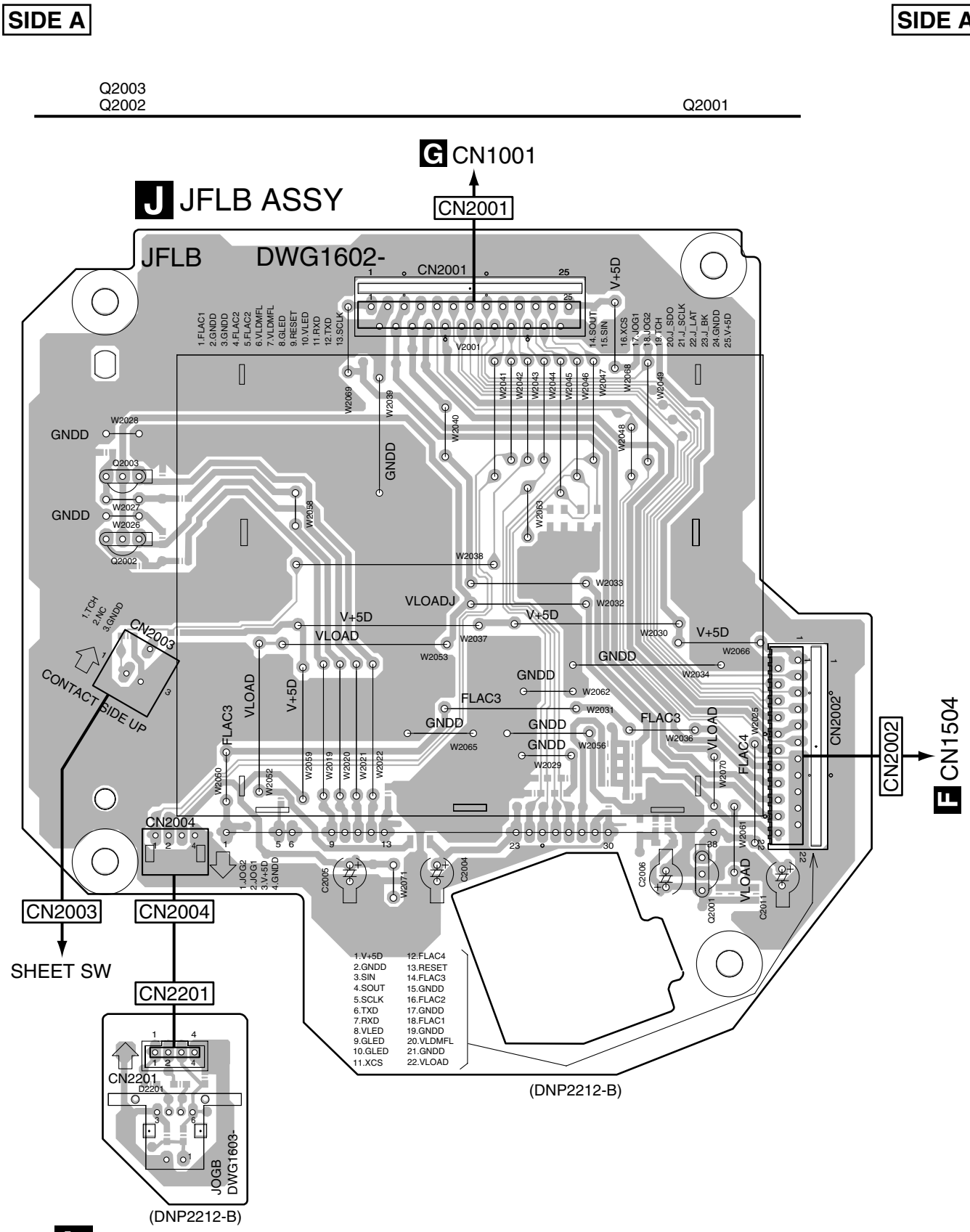

SIDE B

SIDE B

Q2001 IC2001 Q2003 Q2002

J JFLB ASSY

CN2001

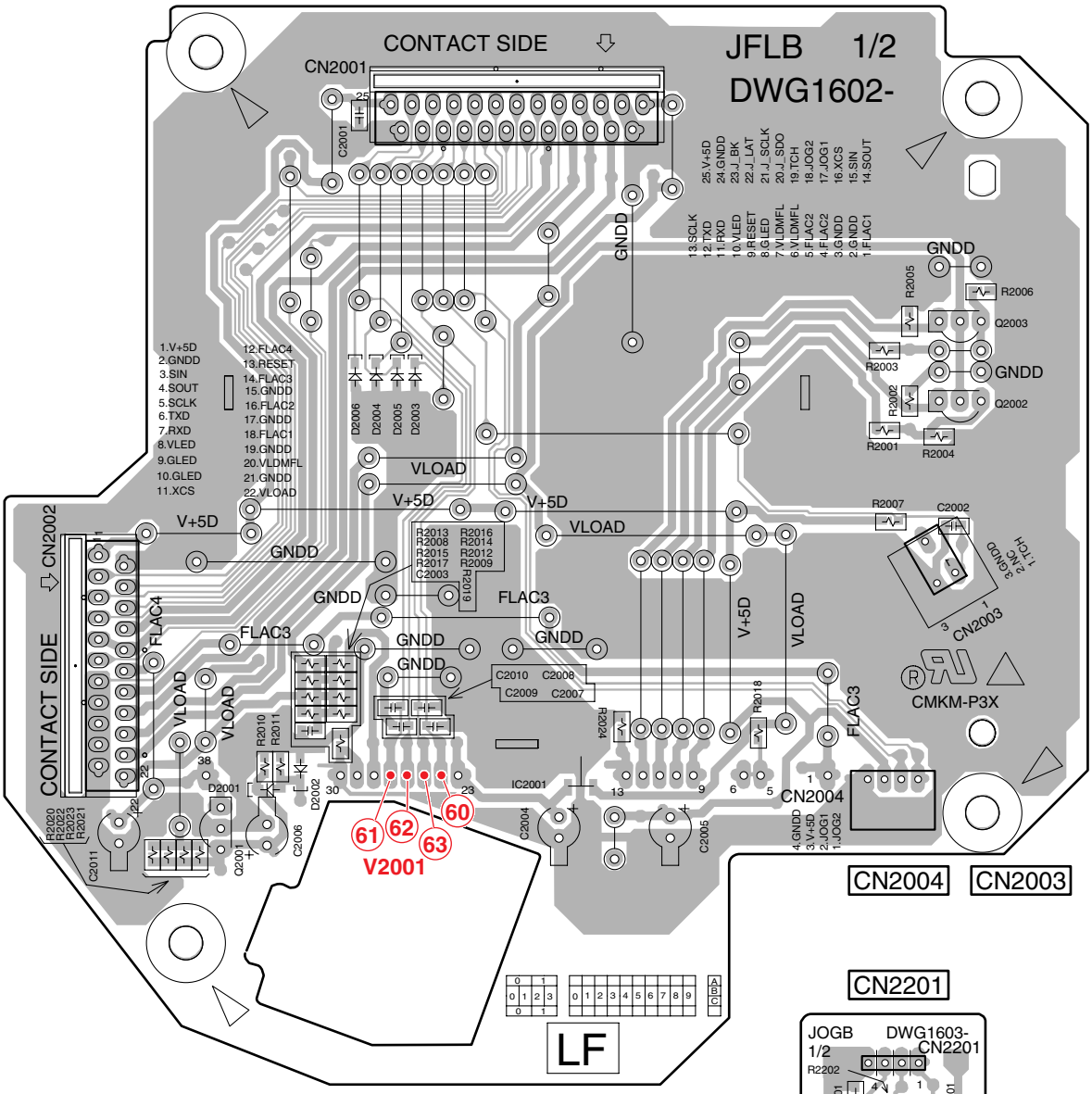

(DNP2212-B)

CN2201

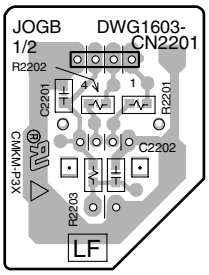

(DNP2212-B)

Note : The encircled numbers denote measuring point.

L JOGB ASSY

J L

4.8 SW POWER SUPPLY ASSY

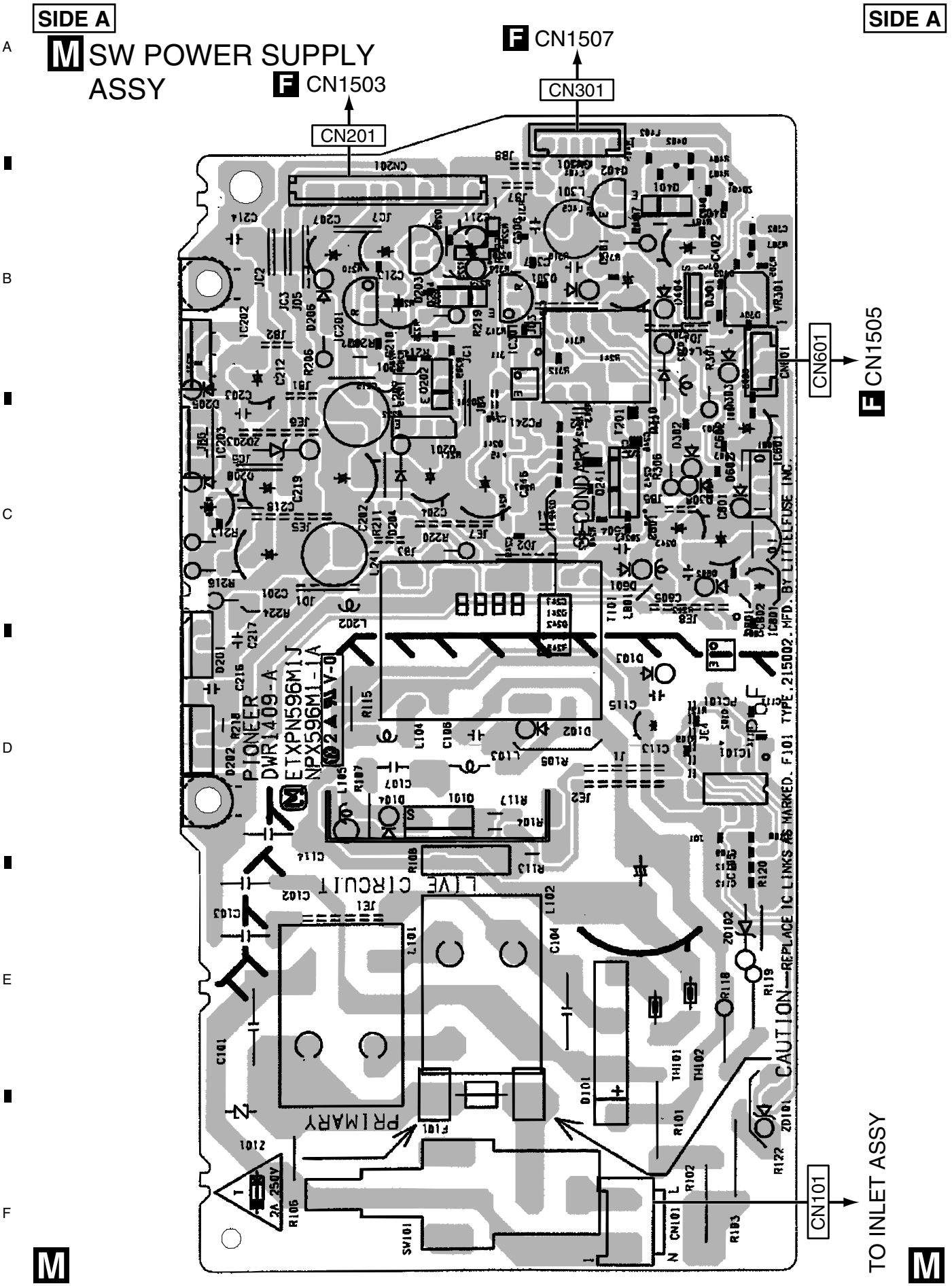

5. PCB PARTS LIST

NOTES:
- *Parts marked by "NSP" are generally unavailable because they are not in our Master Spare Parts List.*
- *The ⚠ mark found on some component parts indicates the importance of the safety factor of the part. Therefore, when replacing, be sure to use parts of identical designation.*
- *When ordering resistors, first convert resistance values into code form as shown in the following examples.*

Ex.1 When there are 2 effective digits (any digit apart from 0), such as 560 ohm and 47k ohm (tolerance is shown by J=5%, and K=10%).

560 Ω	→	*56 x 10^1*	→ *561*	*RD1/4PU 5 6 1 J*
47k Ω	→	*47 x 10^3*	→ *473*	*RD1/4PU 4 7 3 J*
0.5 Ω	→	*R50*		*RN2H R 5 0 K*
1 Ω	→	*1R0*		*RS1P 1 R 0 K*

Ex.2 When there are 3 effective digits (such as in high precision metal film resistors).

5.62k Ω	→	*562 x 10^1*	→ *5621*	*RN1/4PC 5 6 2 1 F*

LIST OF ASSEMBLIES

Mark	No.	Description	Part No.
	1	MAIN ASSY	DWG1591
NSP	1	MFLA ASSY	DWM2223
	2	MJCB ASSY	DWG1605
	2	MFLB ASSY	DWG1606
	2	SLDB ASSY	DWS1367
	3	RSWB ASSY	DWS1368
NSP	1	JFLA ASSY	DWM2224
	2	JFLB ASSY	DWG1602
	2	JOGB ASSY	DWG1603
	2	KSWB ASSY	DWS1365
	3	SLMB ASSY	DWS1366
NSP	1	SUBA ASSY	DWM2225
	2	INSW ASSY	DWS1369
	2	SDCB ASSY	DWX2558
	2	SPCN ASSY	DWX2559
⚠	1	SW POWER SUPPLY ASSY	DWR1409

A MAIN ASSY

SEMICONDUCTORS

Mark	No.	Description	Part No.
	IC601		AN22022A
⚠	IC303		BA00HC5FP
⚠	IC605		BA15BC0WFP
	IC602		BD7905BFS
	IC104		BU4230G
	IC402		DSPD56367PV150
	IC103		DYW1752
	IC101		HD6417709SF133B-D
	IC102		K4S281632F-UC75
⚠	IC606		MM1478DFBE
⚠	IC302		MM1592FF
⚠	IC405		MM1661GH
	IC603		MN103S71F
	IC501		PE8001A
	IC604		PEA007A8
	IC107,IC114,IC407		TC74VHC04FTS1
	IC112		TC7SH04FUS1
	IC111,IC113,IC115		TC7SH08FUS1
	IC106,IC406		TC7SZU04FU
	IC502,IC503		TC7WH34FU
	IC403		TE4300PF
	IC401		TMS320DA150PGE16D
	IC301		XC3S50-4TQG144C
	Q603		2SA1577
	Q501		2SD2114K
	Q604		2SJ598-Z
	Q601,Q602		DTC114YK
	Q605		DTC124EUA
	D501		1SS355
	D301-D303,D401		RB551V-30

COILS AND FILTERS

Mark	No.	Description	Part No.
	L101		LCYA1R5J2520

CAPACITORS

Mark	No.	Description	Part No.
	C602 (22/6.3 V)		CCH1426
	C672		CCSRCH101J50
	C652		CCSRCH121J50
	C457		CCSRCH150J50
	C630,C651		CCSRCH151J50
	C458		CCSRCH180J50
	C516-C518		CCSRCH221J50
	C143,C144		CCSRCH7R0D50
	C105,C321,C413		CCSSCH471J16
	C327,C328,C461,C507,C508		CEHVW101M6R3
	C510,C603,C604,C606,C608		CEHVW101M6R3
	C611		CEHVW101M6R3
	C509,C512,C609,C610		CEHVW470M16
	C613,C614		CEHVW470M16
	C601,C615		CEHVW470M6R3
	C627,C645-C647,C666,C667		CKSRYB102K50
	C676,C679,C692		CKSRYB102K50
	C659,C682		CKSRYB103K50
	C471,C616-C619,C625,C626		CKSRYB104K16
	C628,C629,C631,C633-C636		CKSRYB104K16
	C639-C642,C644,C656,C660		CKSRYB104K16
	C680,C687		CKSRYB104K16
	C102,C103,C141,C145,C320		CKSRYB105K6R3
	C322,C323,C326,C329		CKSRYB105K6R3
	C402-C404,C406,C420,C435		CKSRYB105K6R3
	C448,C456,C632,C637,C638		CKSRYB105K6R3
	C700-C702,C708		CKSRYB105K6R3
	C671		CKSRYB122K50
	C675,C678		CKSRYB182K50
	C677		CKSRYB222K50

Mark No.	Description	Part No.
	C621,C673	CKSRYB273K16
	C138	CKSRYB333K16
	C661,C662	CKSRYB471K50
A	C654,C655,C670	CKSRYB472K50
	C622,C707	CKSRYB473K25
	C706	CKSRYB474K10
	C620	CKSRYB561K50
	C142,C689	CKSSYB102K50
	C125,C324,C401,C441,C449	CKSSYB103K16
	C503-C506	CKSSYB103K16
	C101,C104,C106-C116	CKSSYB104K10
	C118-C124,C126-C133,C137	CKSSYB104K10
	C146,C151,C301-C319,C330	CKSSYB104K10
	C405,C407,C411,C412	CKSSYB104K10
B	C414-C419,C421-C432	CKSSYB104K10
	C436-C440,C442-C447	CKSSYB104K10
	C450-C452,C501,C502	CKSSYB104K10
	C513-C515,C663-C665	CKSSYB104K10
	C668,C669,C681,C684-C686	CKSSYB104K10
	C688,C690,C691,C695-C699	CKSSYB104K10
	C710	CKSSYB104K10
	C704,C705	CKSSYB182K50
	C433	CKSSYB333K10
	C434,C703	CKSSYB562K25
C	**RESISTORS**	
	R610,R611,R615-R617 (0.68,1/4 W)	DCN1143
	R626,R627,R633 (0.68,1/4 W)	DCN1143
	R121,R156,R159,R652	RAB4CQ103J
	R427,R428,R434	RAB4CQ223J
	R435,R437,R440,R441	RAB4CQ472J
	R191,R4452,R4457	RS1/10S0R0J
	R313	RS1/16S1001D
	R659	RS1/16S1502F
	R314	RS1/16S2001D
	R468	RS1/16S2701F
D	R609	RS1/4S0R0J
	R608	RS1/4SA240J
	R636,R637	RS1/4SA2R0J
	Other Resistors	RS1/16S###J
	OTHERS	
	X101 CRYSTAL RESONATOR (65.975 MHz)	DSS1144
	X401 CERAMIC OSCILLATOR (16.000 MHz)	CSS1616
	X402 CRYSTAL RESONATOR (16.9344 MHz)	VSS1084
E	CN502 CONNECTOR 9P	AKM1295
	CN602 13P FFC CONNECTOR	DKN1275
	CN604 4P FFC CONNECTOR	DKN1288
	CN601 26P FFC CONNECTOR	DKN1448
	CN401 13P FFC CONNECTOR	VKN1305
	CN501 15P FFC CONNECTOR	VKN1307
	CN603 CONNECTOR 2P	VKN1940
	CN605 CONNECTOR 3P	VKN1941
	CN503 CONNECTOR 6P	VKN1944

F

Mark No.	Description	Part No.
B	**SLMB ASSY**	
	SWITCHES AND RELAYS	
	S2401,S2402	DSG1017
	OTHERS	
	CN2401 CONNECTOR 3P	S3B-ZR
C	**SPCN ASSY**	
	OTHERS	
	CN3103 12P FFC CONNECTOR	DKN1205
	CN3102 13P FFC CONNECTOR	DKN1275
	CN3101 CONNECTOR 2P	VKN1940
D	**INSW ASSY**	
	SWITCHES AND RELAYS	
	S3301	CSN1031
	OTHERS	
	CN3301 CONNECTOR 2P	VKN1940
E	**SDCB ASSY**	
	SEMICONDUCTORS	
	D3002,D3004,D3006,D3008	DAN202K
	D3001,D3003,D3005,D3007	DAP202K
	SWITCHES AND RELAYS	
	S3001	CSN1068
	CAPACITORS	
	C3004	CEVW101M16
	C3001-C3003	CKSRYB104K16
	RESISTORS	
	All Resistors	RS1/16S###J
	OTHERS	
	CN3001 SD CARD SLOT CONNECTOR	DKP3748
	CN3002 13P CONNECTOR	VKN1305
F	**MJCB ASSY**	
	SEMICONDUCTORS	
	⚠IC1513 (315 mA)	AEK7003
	⚠IC1501 (800 mA)	AEK7008
	⚠IC1502,IC1503 (1.6 A)	AEK7012
	⚠IC1506,IC1514 (2 A)	AEK7013
	⚠IC1507 (4 A)	AEK7018
	⚠IC1504 (200 mA)	AEK7023
	⚠IC1509	BA50BC0FP
	IC1512	NJM4580D
	Q1510	2SC2412K
	Q1511,Q1512	2SC4081

Mark No.	Description	Part No.
⚠	Q1507	2SD2012
	Q1505,Q1506,Q1508,Q1509	2SD2144S
	Q1504	DTA124EUA
	Q1501-Q1503	DTC124EUA
	D1504	1SR154-400
	D1505,D1506	1SS355
	D1503	NNCD6.2MF
	D1501,D1502,D1508	UDZS9R1(B)
	CAPACITORS	
	C1519,C1520,C1523,C1526	CEANP101M10
	C1508,C1513	CEAT221M16
	C1527	CEAT470M16
	C1525	CEHAT101M16
	C1524	CEHAT220M63
	C1507	CEHAZL100M50
	C1515,C1517	CKSRYB103K50
	C1509-C1512,C1521	CKSRYB104K16
	C1522	CKSRYB104K25
	C1514	CKSRYB223K50
	C1528,C1529	CQMBA102J50
	C1502,C1503,C1505,C1506	CQMBA471J50
	C1501,C1504	CQMBA561J50
	RESISTORS	
	R1511,R1532	RD1/2VM103J
	R1503,R1508	RD1/2VM113J
	R1505,R1506,R1514,R1521	RD1/2VM152J
	R1561,R1562	RD1/2VM220J
	R1502	RD1/2VM272J
	R1504,R1507,R1509,R1510,R1512	RD1/2VM471J
	R1519,R1563	RD1/2VM471J
	R1516,R1518,R1529,R1531	RD1/2VM473J
	R1540	RS1/16S1801F
	R1543	RS1/16S3901F
	Other Resistors	RS1/16S###J
	OTHERS	
	JA1502 2P PIN JACK (AU)	AKB7164
	CN1503 CONNECTOR 11P	B11B-EH
	CN1505 CONNECTOR 4P	B4B-PH-K
	CN1507 CONNECTOR 6P	B6B-PH-K
	CN1506 CONNECTOR 6P	B6B-ZR
	CN1501 CONNECTOR 9P	B9B-PH-K
	CN1504 22P FFC CONNECTOR	HLEM22S-1
	JA1503 1P PIN JACK	PKB1036
	JA1501 REMOTE CONTROL JACK	RKN1004
	CN1502 15P FFC CONNECTOR	VKN1246

G MFLB ASSY

Mark No.	Description	Part No.
	SEMICONDUCTORS	
	IC1003	BU4242G
⚠	IC1004	NJM78L05UA
	IC1002	PEG237B-K
	IC1001	TC7SET08FUS1
	Q1016	2SB1237X
	Q1001-Q1015	DTC124EUA
	D1010	NSPB500-0008
	D1007,D1011,D1012,D1014	SLI-343URCW
	D1001-D1006,D1009,D1013	SLI-343YCW
	D1008,D1017,D1018	SLR-343EBT
	D1015,D1016	SLR-343MC
	D1020	UDZS11(B)
	SWITCHES AND RELAYS	
	S1013-S1018	DSG1079
	S1001	DSH1049
	S1002-S1012	VSG1024
	CAPACITORS	
	C1002,C1003	CCSRCH101J50
	C1026,C1027	CCSRCH150J50
	C1015	CEAT101M16
	C1020	CEHAT101M16
	C1019	CEHAZL220M50
	C1016,C1021-C1024	CKSRYB102K50
	C1004,C1006-C1008,C1013,C1014	CKSRYB103K50
	C1025	CKSRYB103K50
	C1001,C1005,C1009-C1012,C1018	CKSRYB104K16
	C1017	CKSRYB104K50
	RESISTORS	
	R1091-R1098	RS1/10S183J
	R1063,R1078-R1084	RS1/10S430J
	VR1001,VR1002 (10k-B)	DCS1045
	Other Resistors	RS1/16S###J
	OTHERS	
	X1001 CRYSTAL RESONATOR (16.0 MHZ)	DSS1149
	1004 2P CABLE HOLDER	51048-0200
	J1006 9P CABLE HOLDER	51048-0900
	J1 JUMPER WIRE 9P	D20PYY0915E
	V1001 FL INDICATOR TUBE	DEL1057
	FL HOLDER	DNF1744
	CN1007 10P FFC CONNECTOR	HLEM10R-1
	CN1001 25P FFC CONNECTOR	HLEM25R-1
	CN1005 CONNECTOR 6P	S6B-PH-K

H SLDB ASSY

Mark No.	Description	Part No.
	SEMICONDUCTORS	
	Q1201,Q1202	DTC124EUA
	D1201	NNCD6.2MF
	D1203	SLR-343MC
	D1202	SLR-343VC
	SWITCHES AND RELAYS	
	S1201-S1203	VSG1024
	CAPACITORS	
	C1201	CCSRCH101J50
	C1203	CEHAT100M50
	C1204,C1205	CKSRYB102K50
	C1202	CKSRYB104K16
	RESISTORS	
	VR1202 (1 k)	DCP1105
	VR1201	DCV1013
	Other Resistors	RS1/16S###J
	OTHERS	
	CN1201 9PJUMPER CONNECTOR	52151-0910

Mark No.	Description	Part No.

I RSWB ASSY

SWITCHES AND RELAYS

S1301	DSK1021

OTHERS

J1301 2P CABLE HOLDER	51048-0200
J0 JUMPER WIRE 2P	D20PYY0210E

J JFLB ASSY

SEMICONDUCTORS

⚠IC2001	NJM78L05UA
Q2001	2SB1237X
Q2002,Q2003	2SC1815
D2001	UDZS6R8(B)

CAPACITORS

C2004,C2005,C2011	CEHAT101M16
C2006	CEHAZL100M50
C2001	CKSRYB104K16
C2003	CKSRYB104K50
C2002	CKSRYB223K25

RESISTORS

All Resistors	RS1/16S###J

OTHERS

CN2002 FFC CONNECTOR 22P	52492-2220
CN2001 FFC CONNECTOR 25P	52492-2520
CN2003 CONNECTOR	CKS1072
V2001 FL INDICATOR TUBE	DEL1058
FL HOLDER	DNF1735
CN2004 CONNECTOR 4P	S4B-PH-K

K KSWB ASSY

SEMICONDUCTORS

Q2301-Q2303	DTC124EUA
D2305-D2308	SLI-343YCW
D2301-D2304	SLR-343EBT
D2309,D2310	SLR-343MC

SWITCHES AND RELAYS

S2301,S2302	DSG1079
S2303-S2306	VSG1024

CAPACITORS

C2301-C2303	CCSRCH101J50

RESISTORS

Allr Resistors	RS1/16S###J

OTHERS

CN2301 FFC CONNECTOR 10P	HLEM10R-1

Mark No.	Description	Part No.

L JOGB ASSY

SEMICONDUCTORS

D2201	GP1A038RBK

CAPACITORS

C2201,C2202	CKSRYB103K50

RESISTORS

All Resistors	RS1/16S###J

OTHERS

CN2201 CONNECTOR 4P	B4B-PH-K

M SW POWER SUPPLY ASSY

There is no service parts.

6. ADJUSTMENT

6.1 TEMPO ZERO POINT ADJUSTMENT

■ Jig

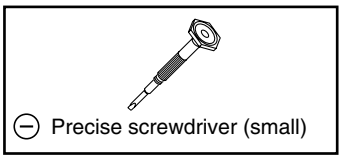

■ Necessary Adjustment Points

When	Adjustment points
Exchange the SLIDER VR	VR1202 (Zero Point ADJ.)

■ Adjustment and Check Points

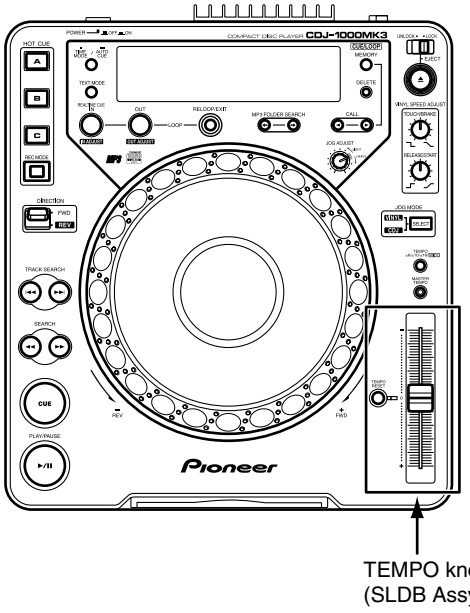

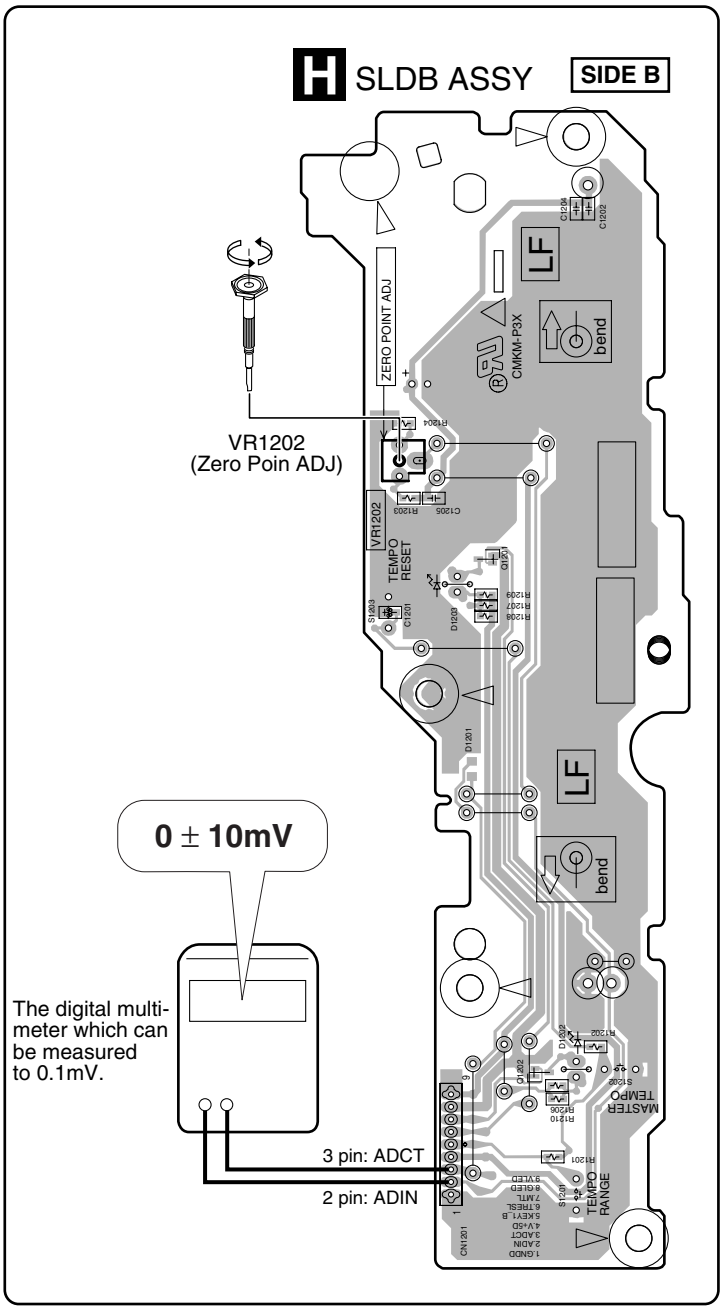

Zero Point ADJ.

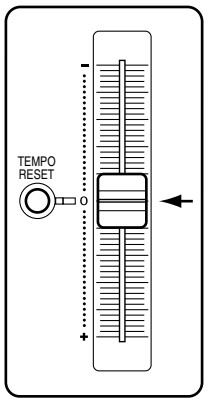

Set the TEMPO knob to the center "0" point.

6.2 MODE FOR CHECKING THE LOAD ON THE JOG DIAL

A

• It is the mode which judges the load (light/-- heavy) numerically when rotating JOG dial.

JOG Check Mode : ON

B

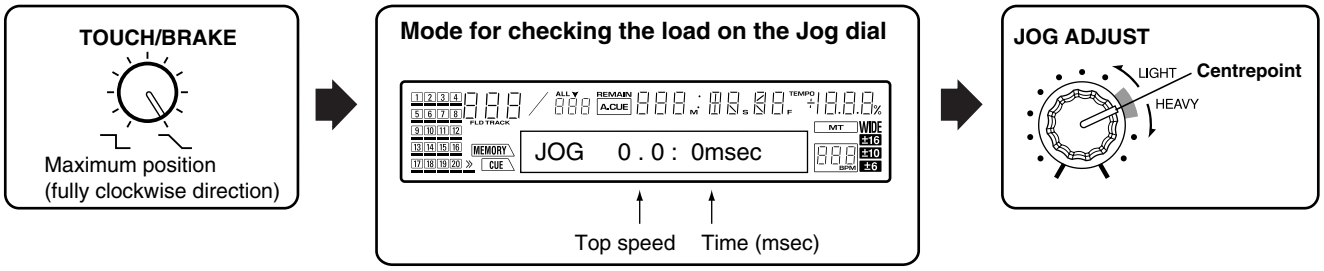

Measuring method

Enter this mode, and a number will be displayed if JOG dial is turned with sufficient vigor. The rotation direction -- clockwise direction and counterclockwise direction -- either is O.K.
For example, when displayed as "JOG 8.6: 115msec", the following contents are shown, respectively.

8.6 = What time speed came out by the highest. (The time of turning one rotation in 1.8 seconds is made into 1 time.)
115 = Time taken for rotation to fall by 1.5 times from 3 times (msec)

C

It is necessary to make it rotate top speed to 7.0 or more times to measure the rotation fall time required.
When it carries out continuously several times, the time which took the average with a part for greatest ever 4 time is displayed 2nd henceforth.
Measurement which absorbed variation can be performed by performing this.

Jog Management Value : 150 ± 25 (msec) ← It judges by the 3rd measured value.

Load adjustment method

Remove the screw fixing the adjust plate, then screw it into the hole corresponding to the value (-1, -2, -3, +1, or +2) for a load to be added:

D

-1, -2, -3 : To decrease the load
+1, +2 : To increase the load

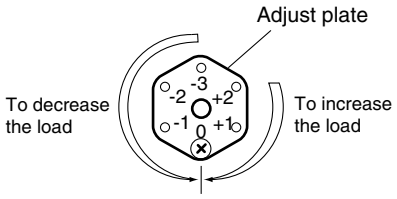

E

JOG Check Mode : CANCEL

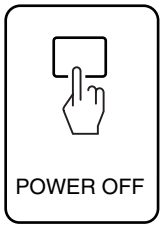

F

7. GENERAL INFORMATION

7.1 DIAGNOSIS

7.1.1 SERVICE MODE

1. Outline in Service Mode

The unit is provided with three microcomputers: a display microcomputer that controls key input and FL/LED display (operating section), a player microcomputer that drives the player, and a system control microcomputer that controls the whole system. The following test modes are provided for diagnosis of each microcomputer.

① **Mode for checking the version of the software program and error history**
In this mode, the version of the software program for each microcomputer can be checked.
And up to 16 error logs can be checked.

② **Mode for checking the buttons in the display section and display functions**
In this mode, buttons and the display function associated with such input can be checked.

③ **Mode for checking the load on the Jog dial**
In this mode, the load on the Jog dial while it is rotated is measured.

④ **Mode for checking the operation of the player simple substance**
In this mode, operation check of the mechanism and servo of the Player section.
This mode consists of "Player operation mode" and "Test operation mode."

2. Mode for checking the version of the software program and error history

In this mode, the version of the software program for each microcomputer and the error history can be checked.

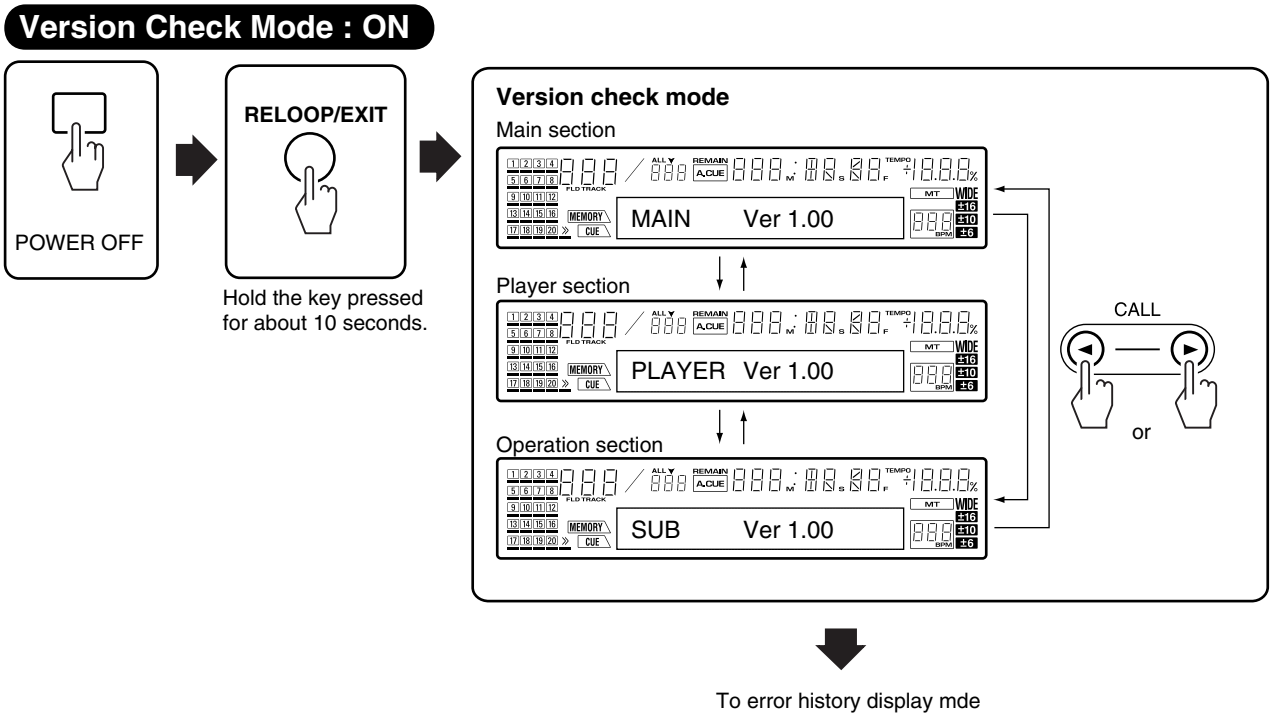

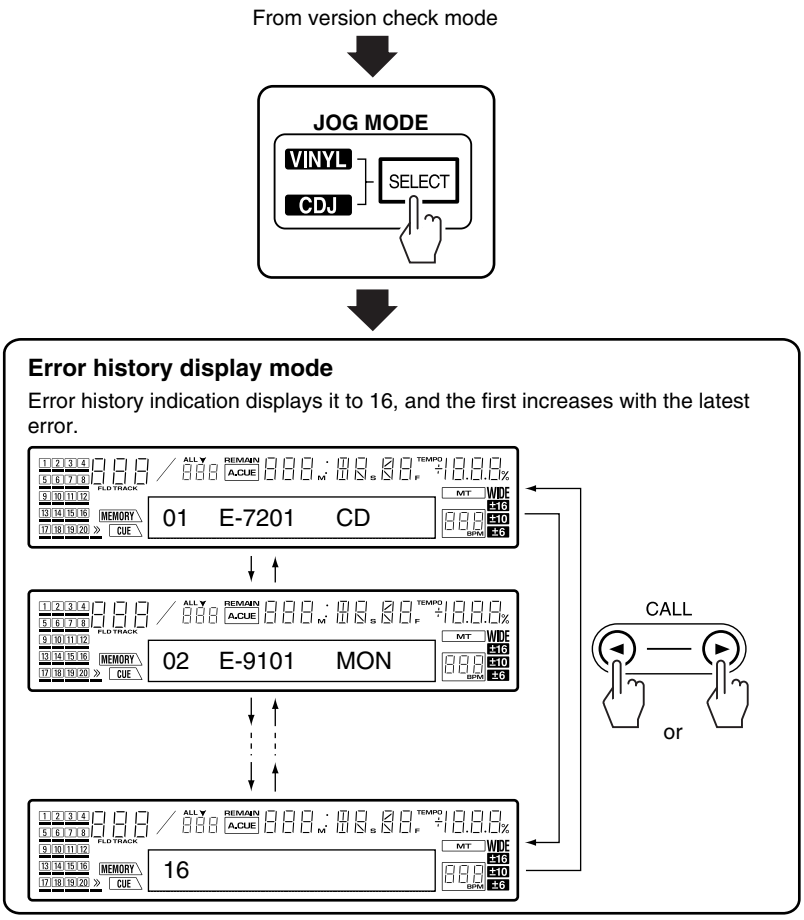

Version Check Mode : CANCEL

List of error codes

Error Code	Error Description	Remarks
E-7001	ATAPI system (drive) error	Unrecoverable: Turn the power off. The error indication will be cleared.
E-7002	DMA FPGA device error	Unrecoverable: Turn the power off. The error indication will be cleared.
E-7010	TI DSP device error	Unrecoverable: Turn the power off. The error indication will be cleared.
E-7011	MOT DSP device error	Unrecoverable: Turn the power off. The error indication will be cleared.
E-7012	TE4300 device error	Unrecoverable: Turn the power off. The error indication will be cleared.
E-7015	FPGA download error	Unrecoverable: Turn the power off. The error indication will be cleared.
E-7101	Exception interrupt outbreak error	Unrecoverable: Turn the power off. The error indication will be cleared.
E-7201	TOC not readable	The error indication is cleared when the EJECT process is finished.
E-8301	Error during startup	The error indication is cleared when the EJECT process is finished or startup is completed successfully.
E-8302	Error during playback	The error indication is cleared when the EJECT process is finished or startup is completed successfully.
E-8303	Other error of the player section	The error indication is cleared when the EJECT process is finished or startup is completed successfully.
E-8304	MP3 decode error	Display it in search for two seconds. Reproduction is continued by possible data.
E-8305	MP3 data format error	The error indication is cleared when the EJECT process is finished or startup is completed successfully.
E-8709	Communication error between operatin section and main section	The error indication is cleared when the communication is finished .
E-8709	Error in mechanical operations	Unrecoverable: Turn the power off. The error indication will be cleared.

Notes: E-8304, E-8305 and E-8709 are not stored into the internal memory.

3. Mode for checking the buttons in the display section and display functions

Display Check Mode : ON

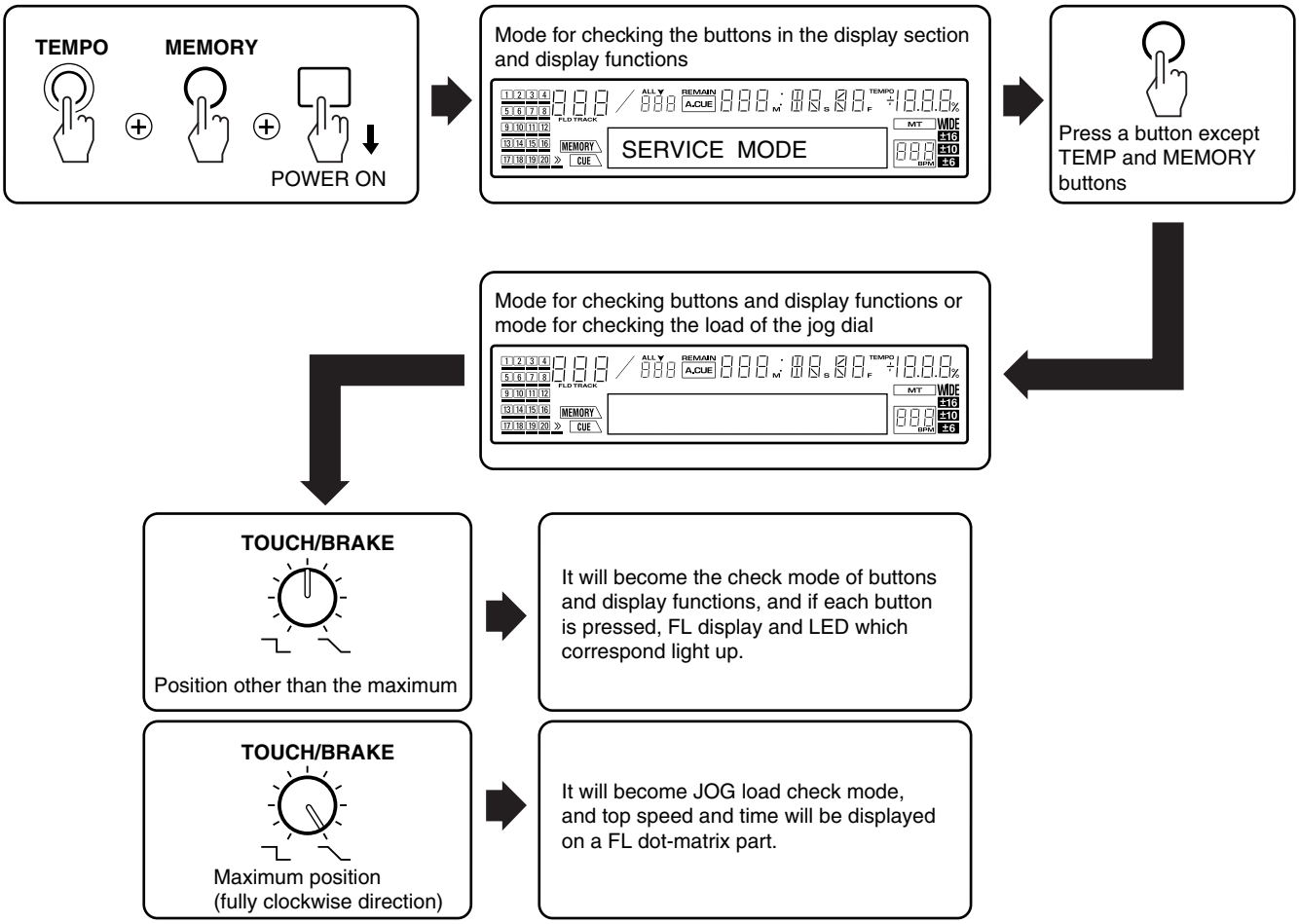

Display Check Mode : CANCEL

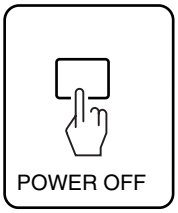

Display Check

Button and Switch	FL Dot-matrix Display	FL Other Display	Light up LED
① PLAY/PAUSE	PLAY		❶ PLAY/PAUSE
② CUE	CUE		❷ CUE
③ IN/REALTIME CUE	IN		❸ IN/REALTIME CUE
④ OUT/OUT ADJUST	OUT		❹ OUT/OUT ADJUST
⑤ RELOOP/EXIT	RELOOP		❺ RELOOP
⑥ FOLDER ⬅	FOLDER ⬅	❻ 15G lights up	
⑦ FOLDER ➡	FOLDER ➡	❼ 16G lights up	
⑧ TRACK (⏮)	TRACK ⏮	❽ 14G lights up	
⑨ TRACK (⏭)	TRACK ⏭	❾	
⑩ REV (◀◀)	REV ◀◀	❿	
⑪ FWD (▶▶)	FWD ▶▶	⓫	
⑫ HOT CUE (A)	HOT CUE A		⓬ HOT CUE (A), (B), (C) Red
⑬ HOT CUE (B)	HOT CUE B		⓭ HOT CUE (A), (B), (C) Green
⑭ HOT CUE (C)	HOT CUE C		⓮ HOT CUE (A), (B), (C) Orange
⑮ REC MODE	REC MODE		
⑯ JOG MODE	JOG MODE	⓰	⓰ VINYL
⑰ TEMPO	TEMPO		⓱ CDJ
⑱ MASTER TEMPO	MASTER TEMPO		⓲ MASTER TEMPO
⑲ TEMPO RESET	TEMPO RESET		⓳ TEMPO RESET
⑳ TIME MODE/AUTO CUE	TIME/ACUE		
㉑ TEXT MODE	TEXT/WAVE		
㉒ DELETE	All FL lights up	All FL lights up	All LED lights up *Note
㉓ MEMORY	MEMORY		㉓ CARD
㉔ EJECT	EJECT		
㉕ CUE/LOOP CALL ◀	CALL ◀		
㉖ CUE/LOOP CALL ▶	CALL ▶		
㉗ TOUCH SENSOR	TOUCH SW	㉗	
㉘ JOG rotating to FWD	JOG >		
㉘ JOG rotating to REV	< JOG		
㉙ DIRECTION Reverse			㉙ REV
㉚ EJECT LOCK	lock		

* **Notes:** As for HOT CUE button LED, as for HOT CUE(A), red, HOT CUE(B) are green, and LED of an orange turns on HOT CUE(C).

- **A display of TOUCH/BRAKE, RELEASE/START and TEMPO slider reading value**
  In the following area of FL indication department, a bar displays TOUCH/BRAKE, RELEASE/START, a TEMPO slider reading value.
  MEMORY Area : If a TOUCH/BRAKE knob is turned to the clockwise direction, the number of display dots will increase.
  CUE Area : If a RELEASE/START knob is turned to the clockwise direction, the number of display dots will increase.
  Playing Address : If a TEMPO slider knob is moved to + side, the number of display dots will increase.

• **Upper Panel**

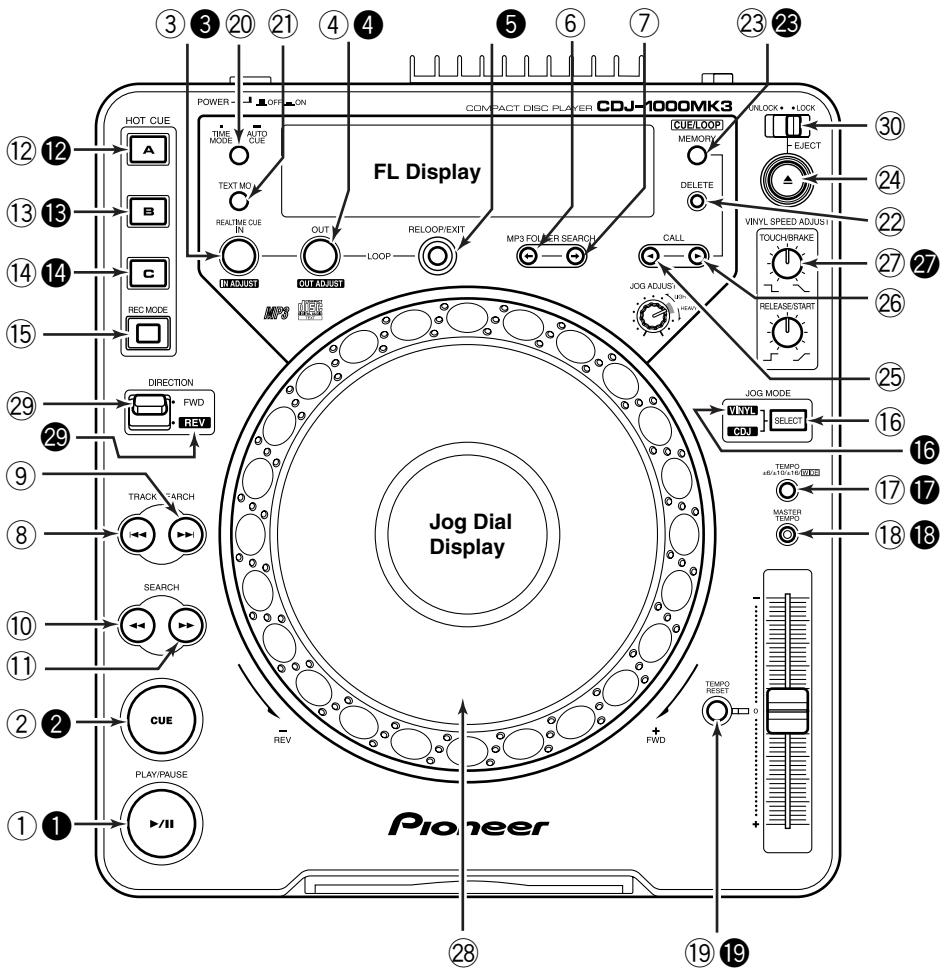

• **FL Display**

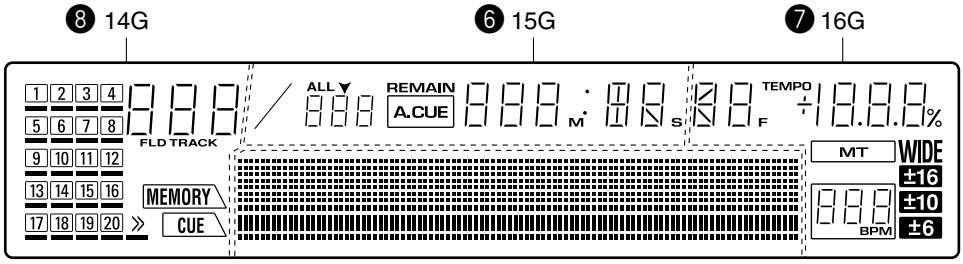

• **Jog Dial Display**

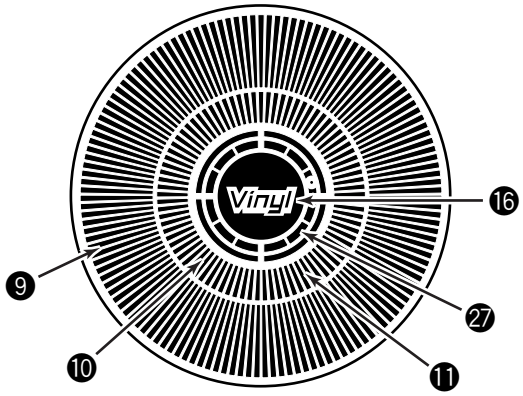

4. Mode for checking the operation of the player simple substance

This mode consists of "Player operation mode" and "Test operation mode."

Player operation mode: ON

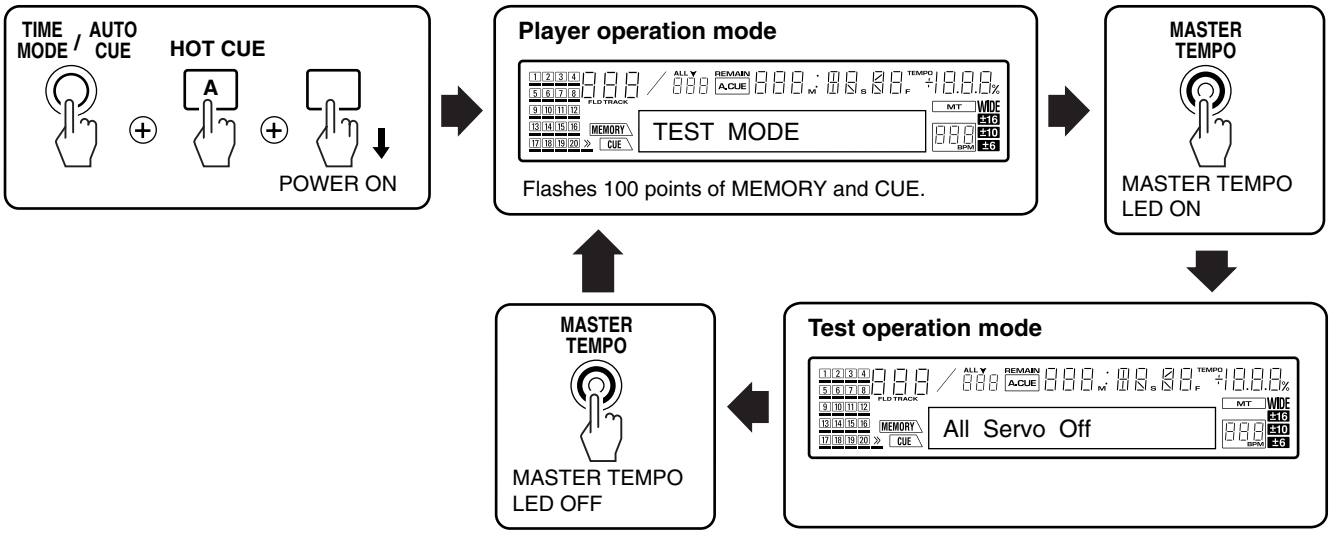

Player operation mode: CANCEL

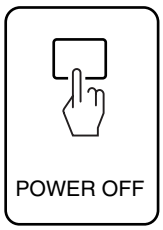

<Player oparation mode>
Basic operation of the servo, such as setup, play, pause, and track search, is carried out.
Moreover, measurement of an error rate can also be performed.

<Test opalation mode>
Servo operation is finely controllable gradually.

* It becomes player operation mode and shifts to test operation mode by the key input in the beginning.
* The command treated here is for mainly testing a mechanism and a servo system, and is not for DJ functions, such as scan and tempo.

• Player oparation mode

Function	Button of the Main Unit
Play(trace) / Pause	PLAY/PAUSE
Track Search F/R	TRACK SEARCH ►►I/I◄◄
Error Rate Count	CUE
Eject	EJECT
Mode Change	MASTER TEMPO

• Test oparation mode

Function	Button of the Main Unit
Servo All Off	TIME
Slider Move Fwd	SEARCH ►►
Slider Move Rev	SEARCH ◄◄
Step Command	FOLDER SEARCH ⬅/➡
Mode Change	MASTER TEMPO

A

• Commands in Player Operation mode

Play (trace)/Pause
If the unit is in Stop mode when this command is issued, the unit is set up, the PLAY/PAUSE button lights, then playback starts. If the unit is in Playback mode, it enters Pause mode. If in Pause mode, it releases Pause mode then restarts playback. When a CD is played, the progress of signal trace and track number are indicated on the FL display.

Note: In this mode, auto setup will not be performed even if a disc is loaded. Playback does not mean audio playback but tracing of the signal surface of a disc. In playback, tracing is performed at 4000 rpm CAV.

Track Search F/R
For a CD, the displayed track is searched in the forward or reverse direction, then the unit will pause.
Note: When a CD-ROM (MP3) is used, track search cannot be performed.

B

Error Rate Count
For a CD, the error rate is measured for about 20 seconds from the current playback/pause position, then the result is displayed on the FL display. Normally, you would search the track for which you wish to measure the error rate, pause the unit, then press the CUE button. The result of measurement will be displayed, for example, as "3.56E-4 OK."
If the error rate is 3.00E-3 or less, that CD is judged okay. If it is greater than 3.00E-3, the CD is considered defective.
The parameter is derived from the results of measurements with control discs at the factory.
This function must not be used for judgment of failure of a product during servicing.

Eject
To eject a disc.

C

Mode Change (to shift to Test Operation mode)
When the MASTER TEMPO button is pressed during normal player operation, the MASTER TEMPO LED lights. Playback is stopped, and the unit shifts to Test Operation mode, described below. "All Servo Off" is displayed on the FL display.

• Commands in Test Operation mode
Servo operations can be controlled step by step. Care must be taken when using a command in Test Operation mode, because a wrong command may damage the player.

D

Servo All Off
When the TIME button is pressed during Servo ON, all the servos are shut off.
"All Servo Off" is displayed on the FL display while the TIME button is held pressed. If it is held pressed for less than 1 second, the indication will remain displayed for 1 second.

Slider Move Fwd
Each time the SEARCH FWD button is pressed, the slider moves about 1.8 mm outward.
"Slider Move Fwd" is displayed on the FL display while the SEARCH FWD button is held pressed. If it is held pressed for less than 1 second, the indication will remain displayed for 1 second.

Slider Move Rev
Each time the SEARCH REV button is pressed, the slider moves about 1.8 mm inward.
"Slider Move Rev" is displayed on the FL display while the SEARCH REV button is held pressed. If it is held pressed for less than 1 second, the indication will remain displayed for 1 second.

E

Step command
A series of operations for startup will be performed step by step.
Each time the FOLDER SEARCH FWD button is pressed, the step is advanced. Each time the FOLDER SEARCH REV button is pressed, the step is reversed. Each step and its operation is shown in the table below:

F

Step		Operation	FL Display
	STEP0:	Servo All Off	All Servo Off
	STEP1:	Laser diode on	STEP1 LD
	STEP2:	Disc presence judgment	STEP2 D.SENSE
	STEP3:	Spindle on (2000rpm)	STEP3 SPDL
	STEP4:	Disc search	STEP4 D.SRCH
	STEP5:	Focus serve on	STEP5 FCS
	STEP6:	Focus position coarse adjustment	STEP6 F.POS
	STEP7:	Tracking balance adjustment	STEP7 T.BAL
	STEP8:	Tracking servo on	STEP8 TRK
	STEP9:	Focus position adjustment	STEP9 F.POS
	STEP10:	Focus gain adjustment	STEP10 F.GAIN
	STEP11:	Tracking gain adjustment	STEP11 T.GAIN
	STEP12:	Address lead start	STEP12 READ

FOLDER SEARCH FWD button : step up
FOLDER SEARCH REV button : step down

"All Servo Off" is displayed for about 1 second. The indications for steps 1 to 12 are displayed on the FL display until the next step is entered.

Mode Change (termination of Test Operation mode)
When the MASTER TEMPO button is pressed during Test Operation mode, the MASTER TEMPO LED goes dark, the servo is stopped, then the unit shifts to Player Operation mode, described above.

7.1.2 HOW TO UPGRADE THE SOFTWARE OF THE MICROCOMPUTER

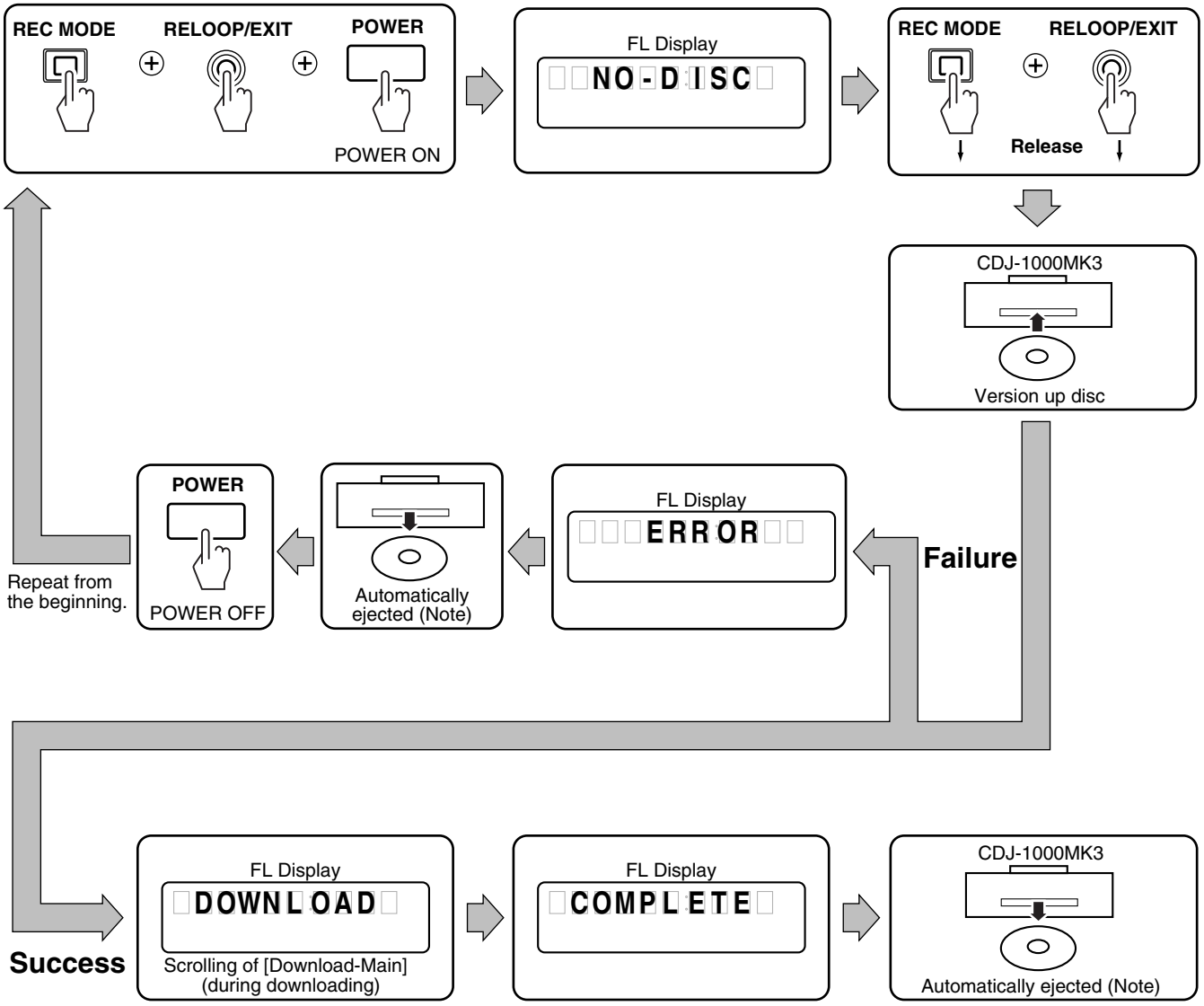

Note:

- Do NOT turn off the power after the upgrade disc is loaded till it is automatically ejected. If you do, the unit may not operate properly afterward.
- Eject a disc automatically even if updating fails.

7.1.3 SEQUENCE

● Power On Sequence

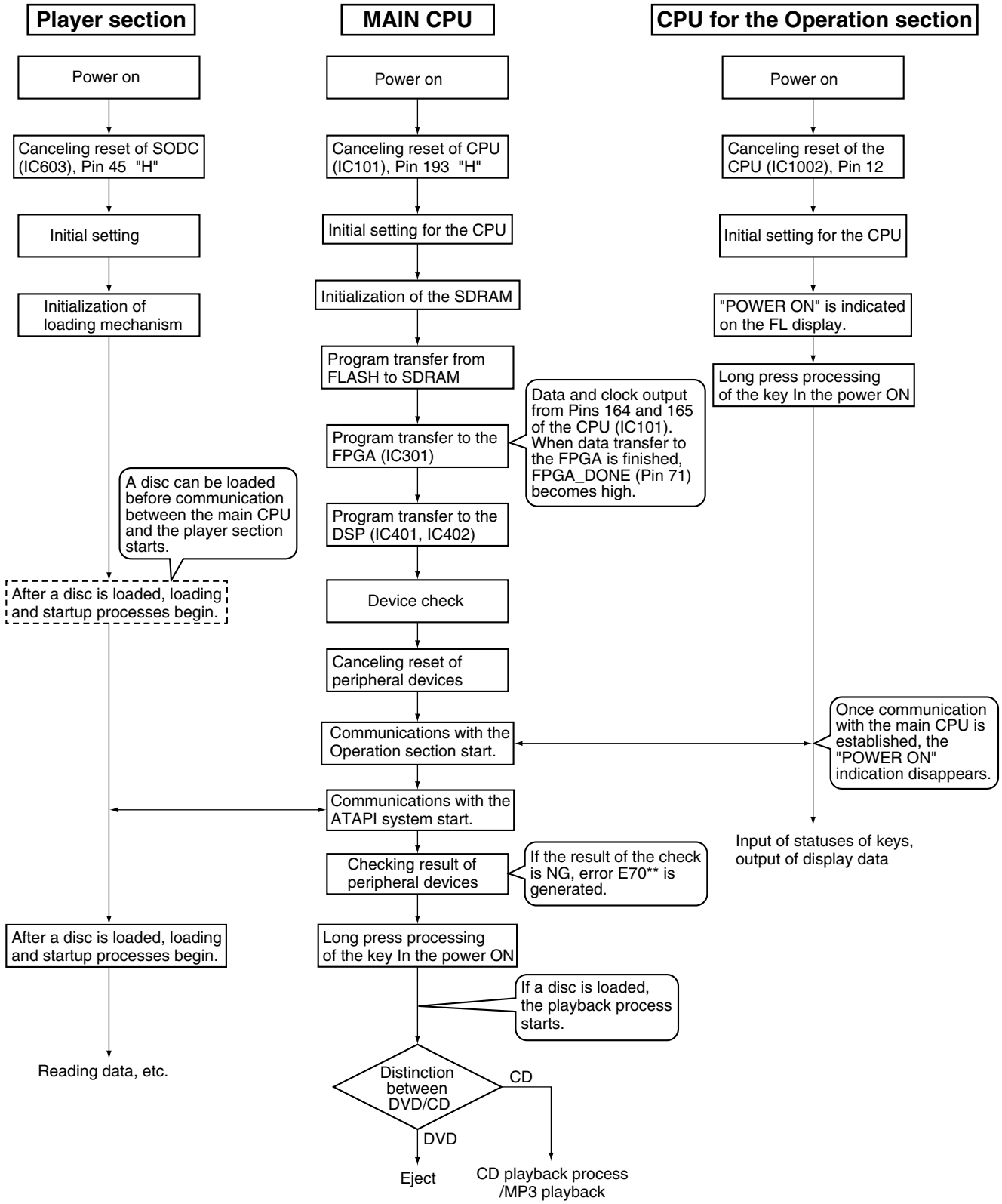

● Sequence of Starting Up the Drive

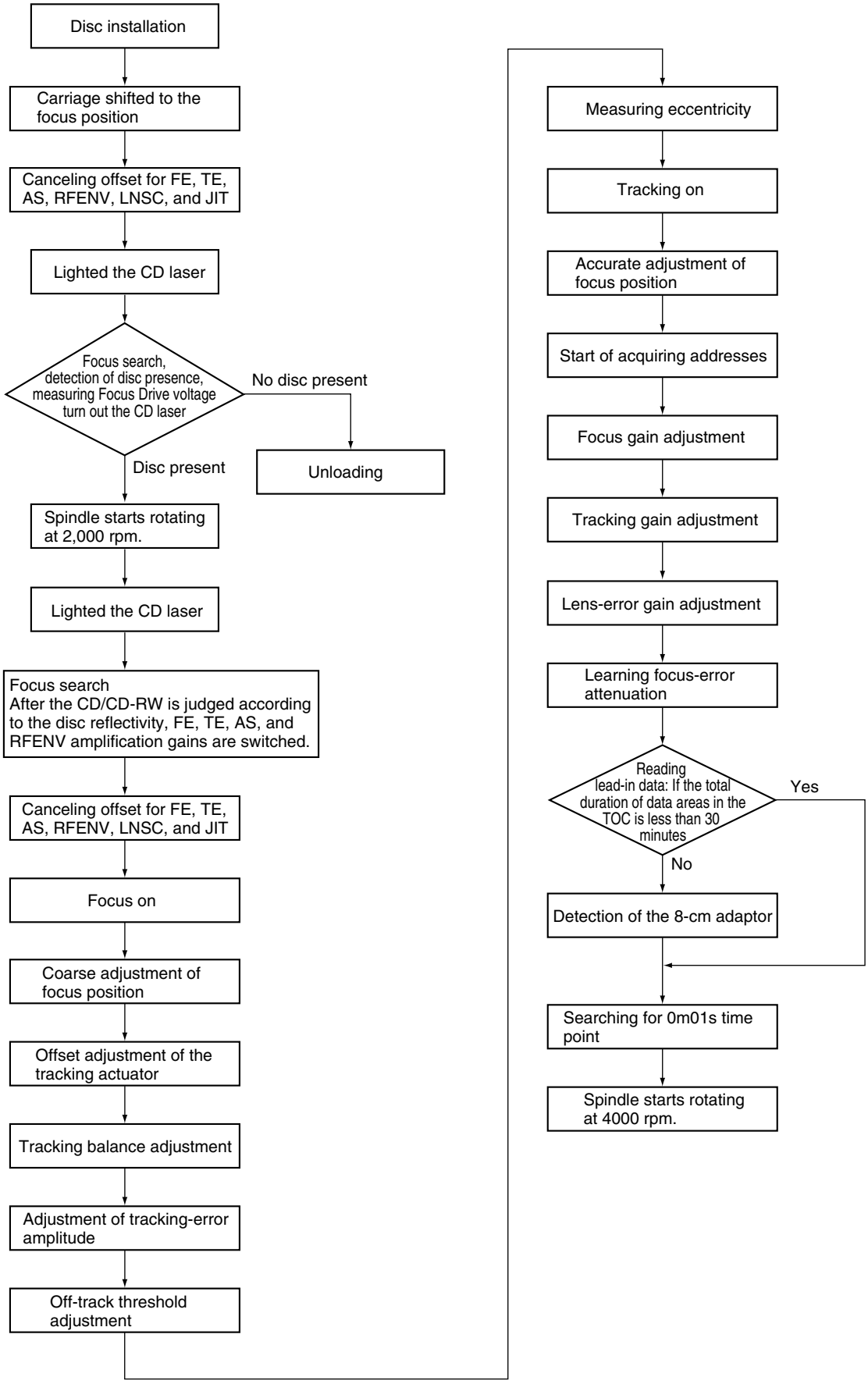

7.1.4 DISASSEMBLY

Note 1: Do NOT look directly into the pickup lens. The laser beam may cause eye injury.
Note 2: Even if the unit shown in the photos and illustrations in this manual may differ from your product, the procedures described here are common.

PCB Location

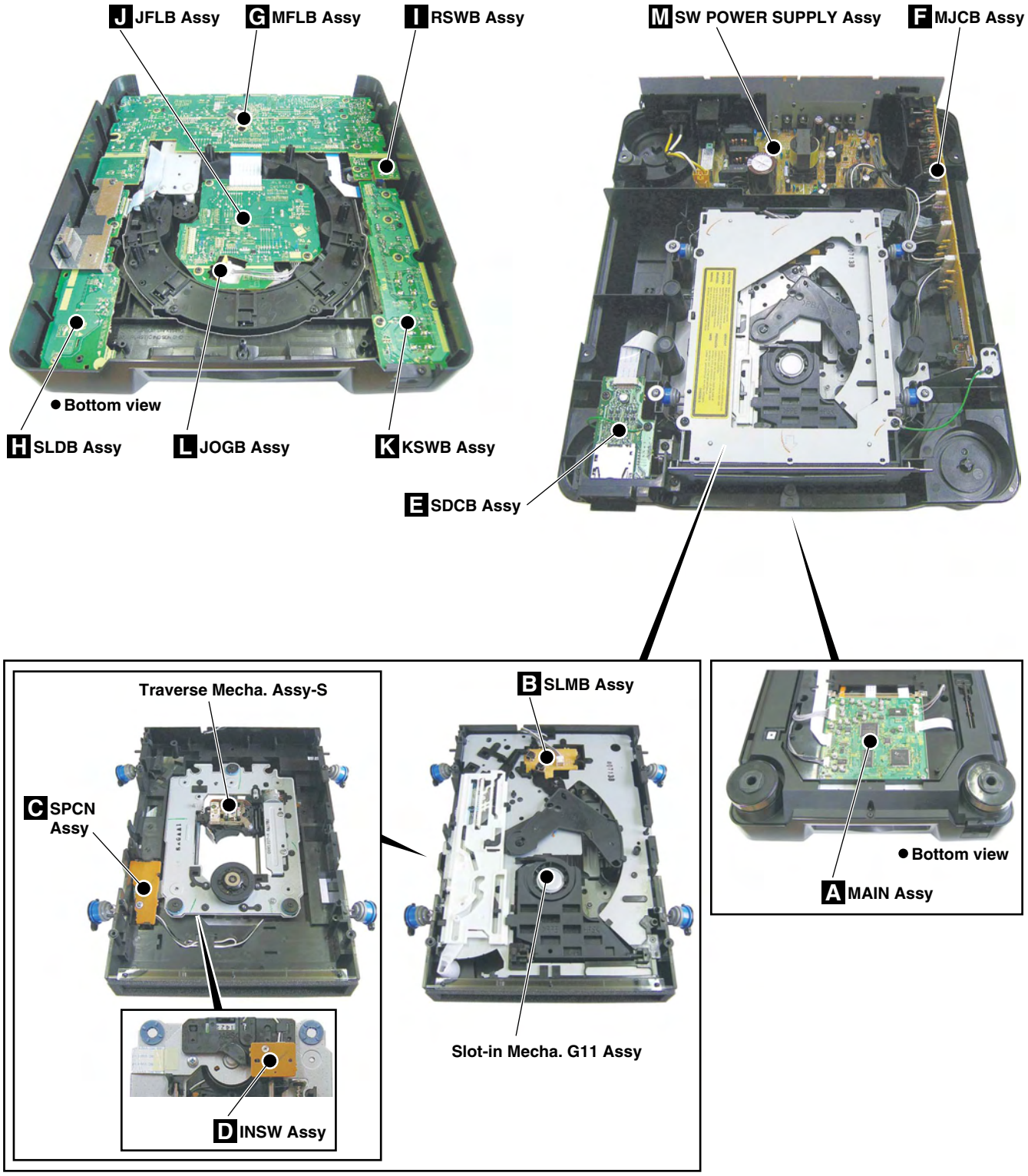

Diagnosis of MAIN Assy

① Remove the seven screws.

② Remove the bottom plate.

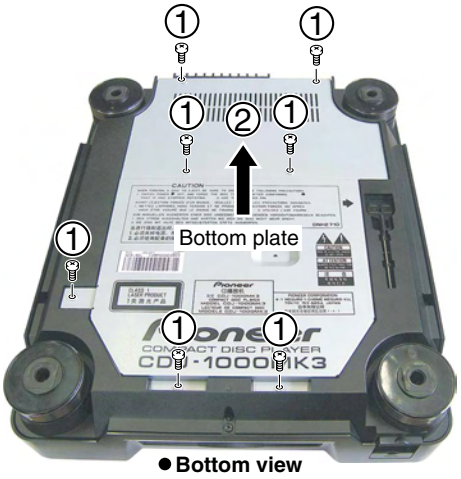

● **Bottom view**

③ Remove the four screws.

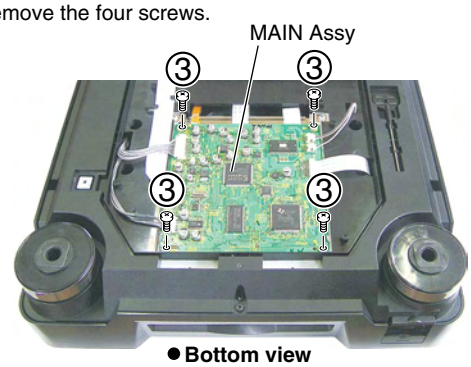

● **Bottom view**

④ Stand the MAIN Assy.

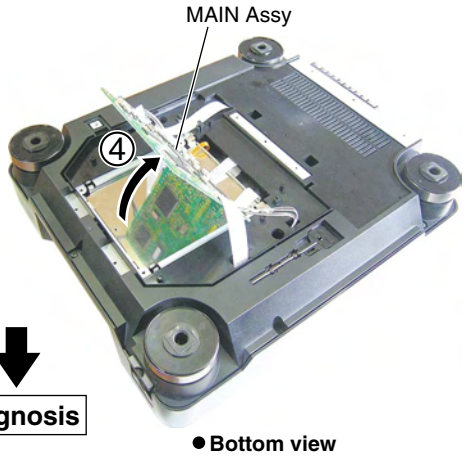

Diagnosis

● **Bottom view**

Note:
If diagnosis of the SD card block is not required, the diagnostic procedures can be performed with the MAIN Assy kept in the upright position. Continue to Steps 5 through 7.

⑤ Stand the MAIN Assy.

⑥ Disconnect the flexible cable: (CN401).

⑦ Set the MAIN Assy in the upright position, by engaging it at the two hooks.

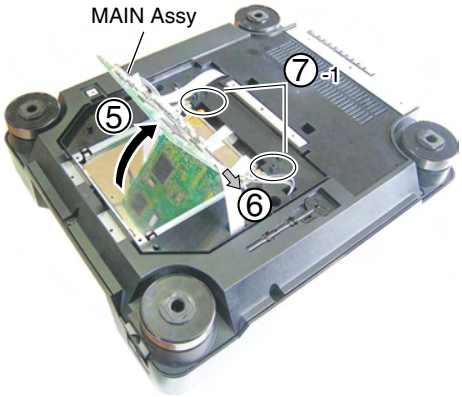

● **Bottom view**

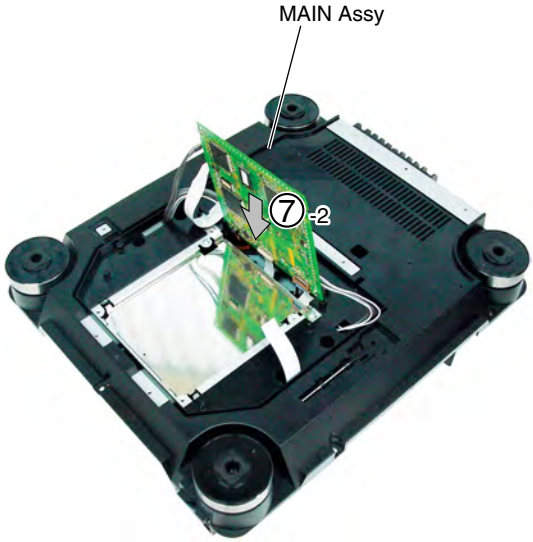

● **Bottom view**

Diagnosis

Disassembly

1 Control Panel Section

① Remove the one screw.

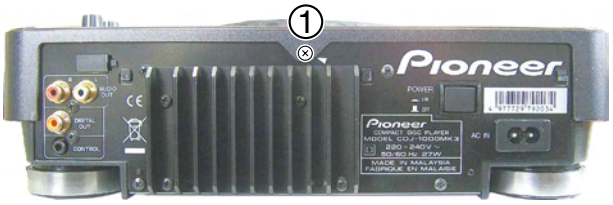

● Rear view

② Remove the five screws.

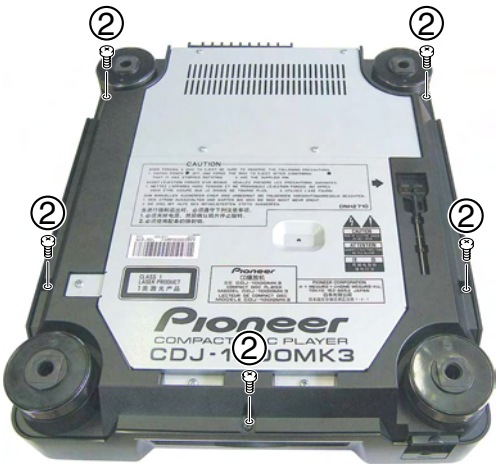

● Bottom view

③ Remove the control panel section.

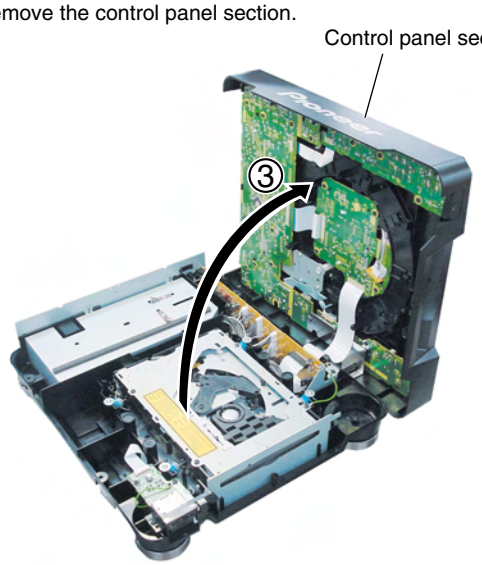

2 Slot-in Mecha. Section

① Remove the control panel section.
(Refet to "Control panel section".)

② Remove the seven screws.

③ Remove the bottom plate.

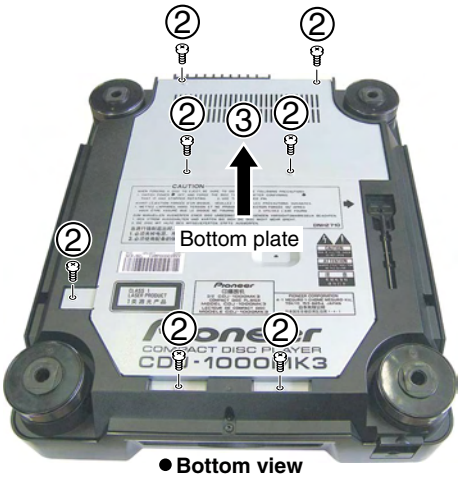

● Bottom view

④ Remove the four screws.

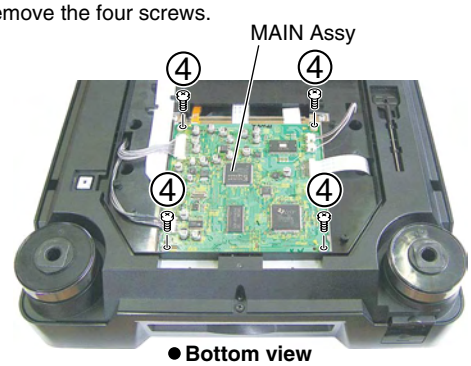

● Bottom view

⑤ Stand the MAIN Assy.

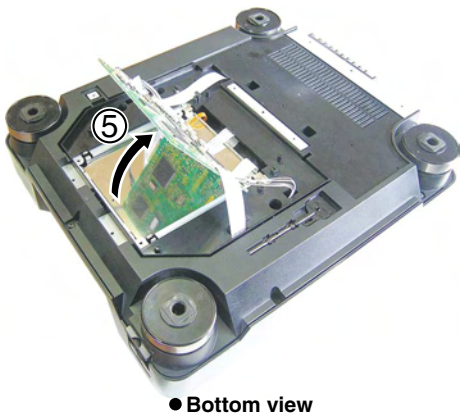

● Bottom view

⑥ Stand the MAIN Assy.

⑦ Disconnect the flexible cable (CN401).

⑧ Set the MAIN Assy in the upright position, by engaging it at the two hooks.

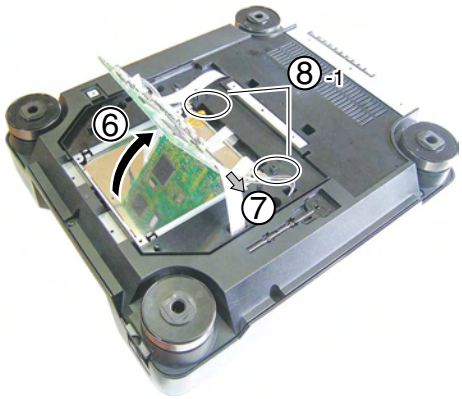

● Bottom view

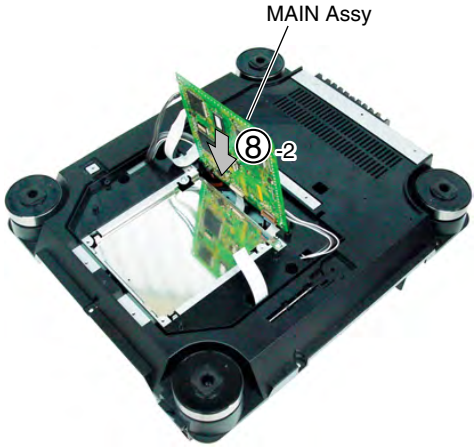

● Bottom view

⑨ Remove the two screws.

⑩ Remove the shield case.

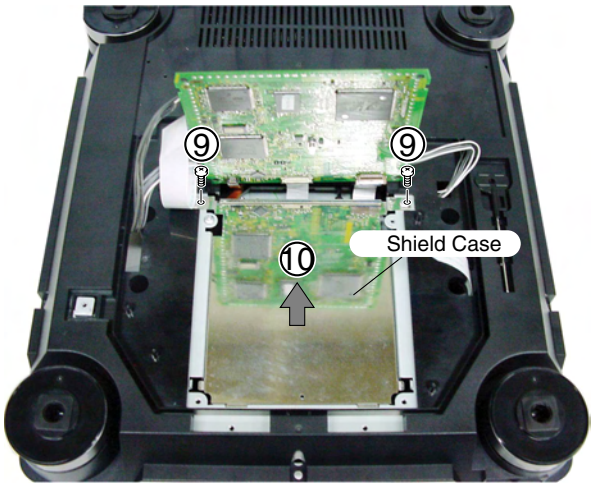

⑪ Short-circuit two points of C and D soldering.

Note: After replacement, connect the flexible cable, then remove the soldered joint (open).

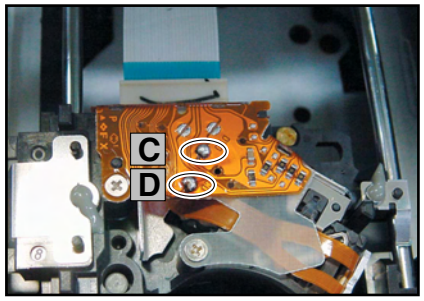

⑫ Disconnect the two connectors.

⑬ Disconnect the three flexible cables.

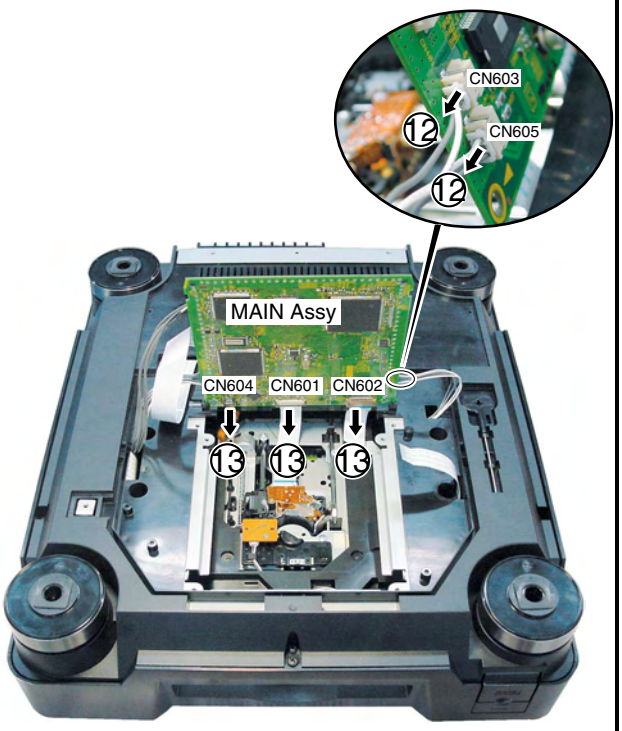

● Bottom view

⑭ Remove the earth lead unit by removing the one screw.

⑮ Remove the four DM screws.

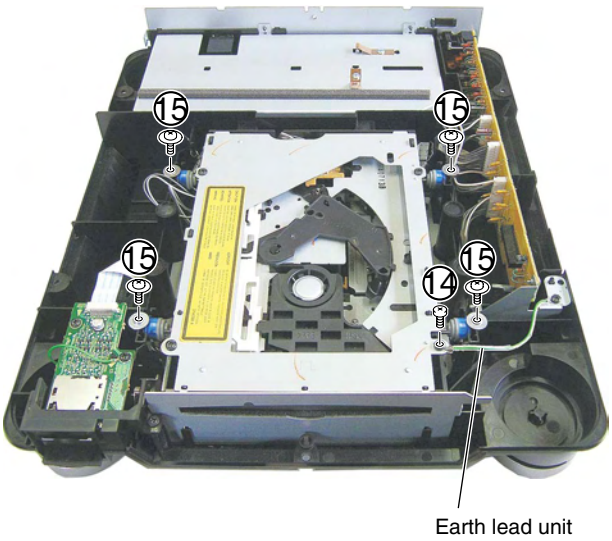

⑯ Remove the four float spring G5s.

⑰ Remove the slot-in mecha. section.

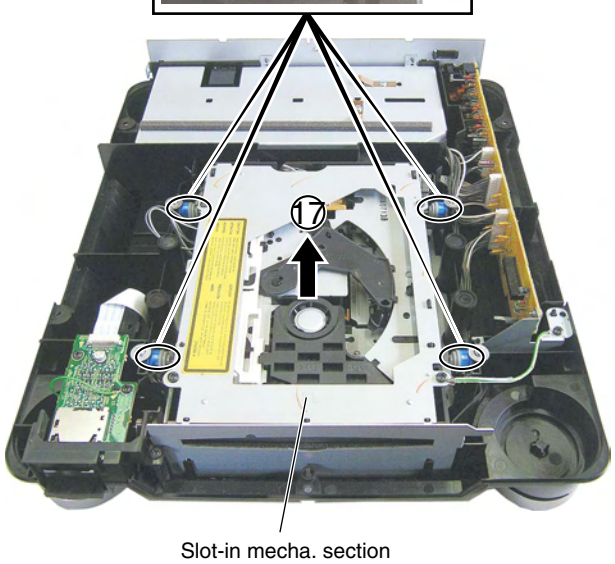

3 Traverse Mecha. Assy-S

① Remove the three screws.
② Remove the mecha. plate.

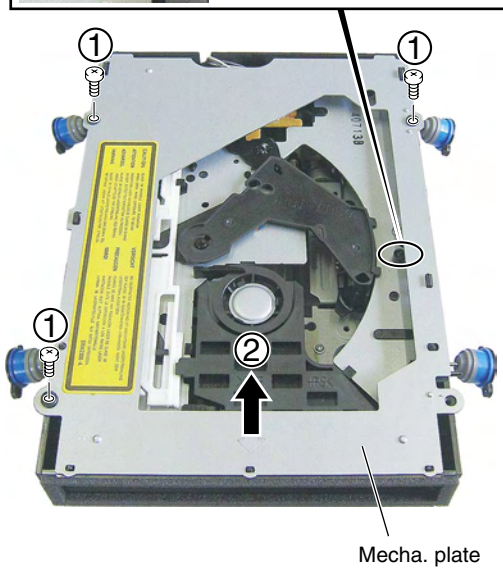

③ Unhook the four hooks.
④ Remove the slot-in mecha. G11 Assy.

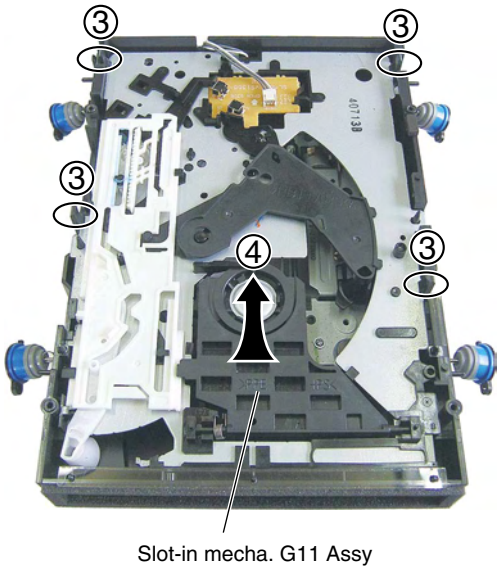

⑤ Remove the three float screws.
⑥ Remove the traverse mecha. Assy-S.

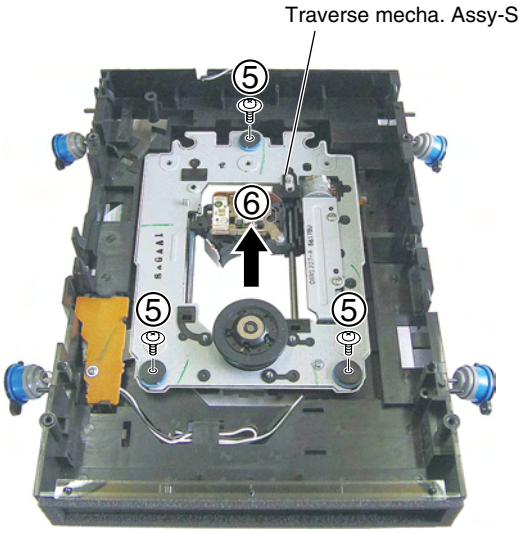

Before shipment, be sure to clean the pickup lens, using the following cleaning materials:

Cleaning liquid : GEM1004
Cleaning paper : GED-008

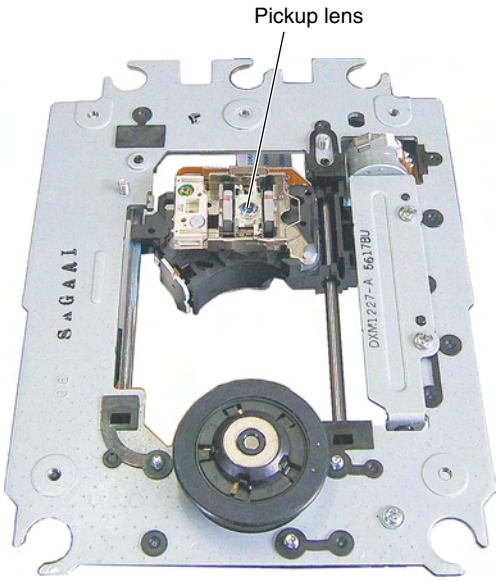

4 JOG Section

① Remove the adjust knob.

② Disconnect the flexible cable.
③ Remove the five screws.
④ Remove the JOG section.

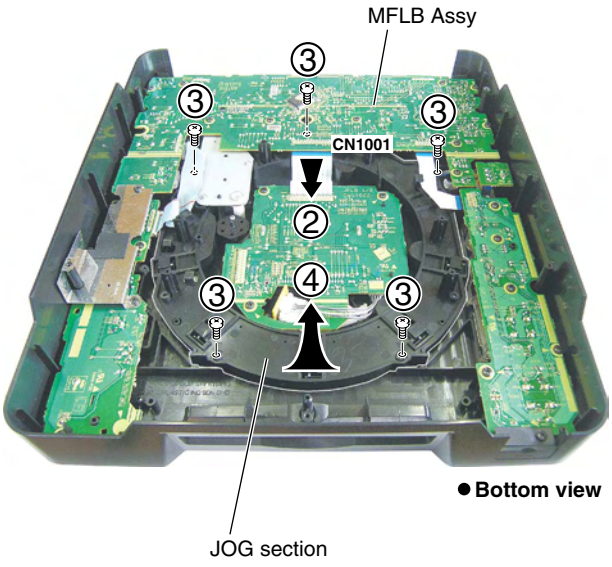

⑤ Remove the two screws.
⑥ Remove the JOG A and JOG Bs.

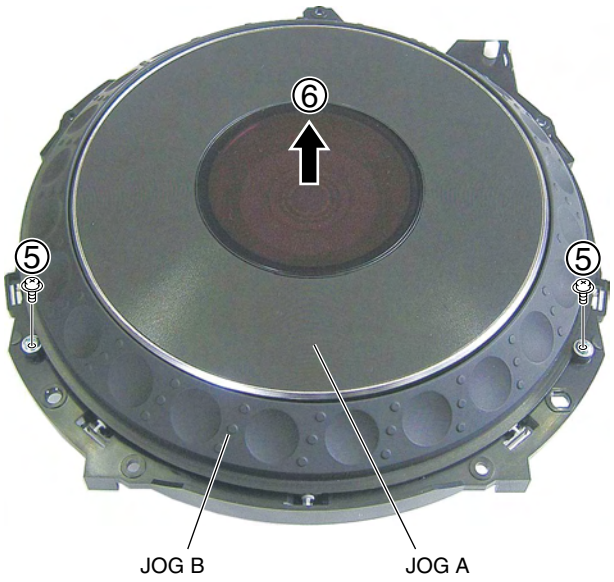

⑦ Remove the three screws.
⑧ Remove the SW ring.

Caution:
Be careful not to lost SW spring 25.

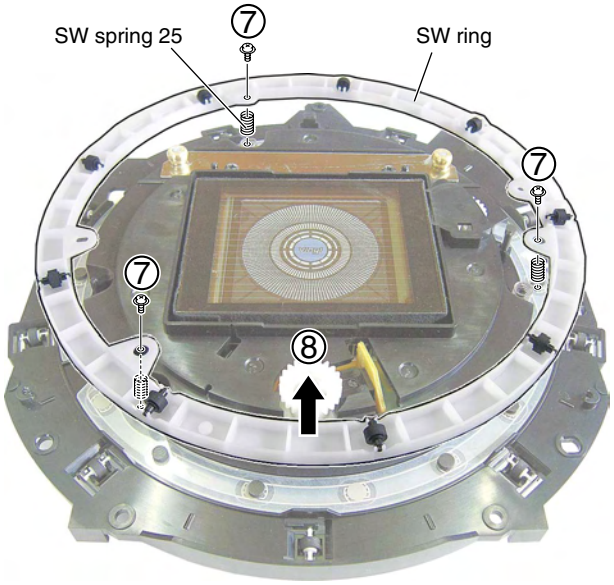

Notes on Replacement

Positioning of the JOG ADJ. mechanism

Note: When reassembling the JOG ADJ. mechanism, be sure to perform positioning, as shown below:

① Mount the joint gear 1.

② Align the projection of JOG holder 1000 ( ) with the arrow head ( ) on joint gear 1.

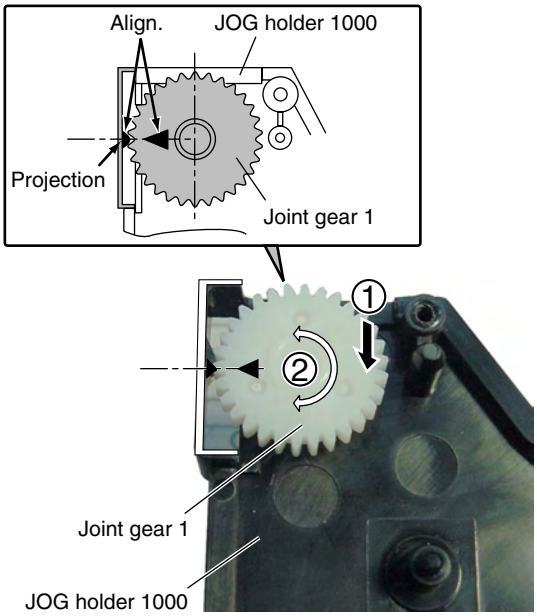

③ Mount the cam plate on place it so that the slit of the cam plate aligns with the gear stopper.

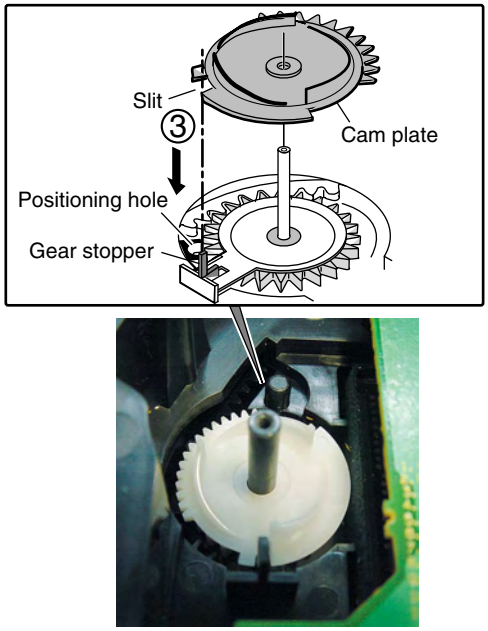

④ Turn the cam plate clockwise until the slit aligns with the positioning hole.

⑤ Insert the forced eject pin through the positioning hole to immobilize the cam plate.

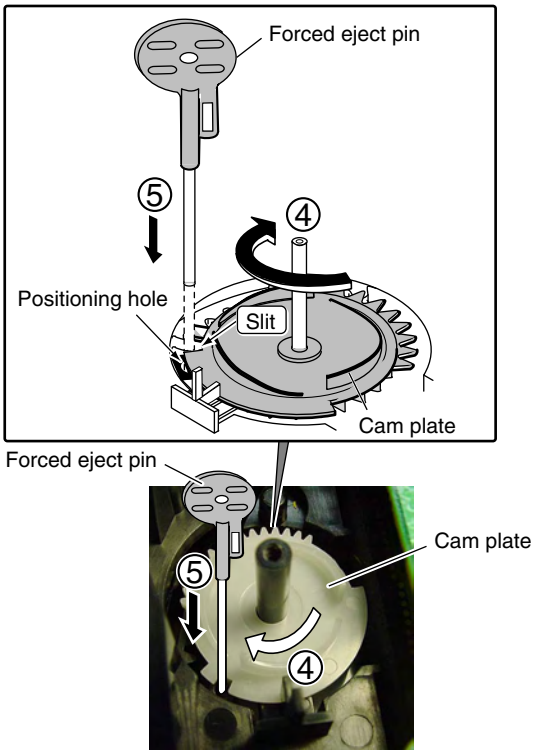

⑥ Mount the joint gear 3.

⑦ Mount the two joint gears 2.

Note: When mounting joint gears 2, engage the gears, being careful not to move joint gear 1.

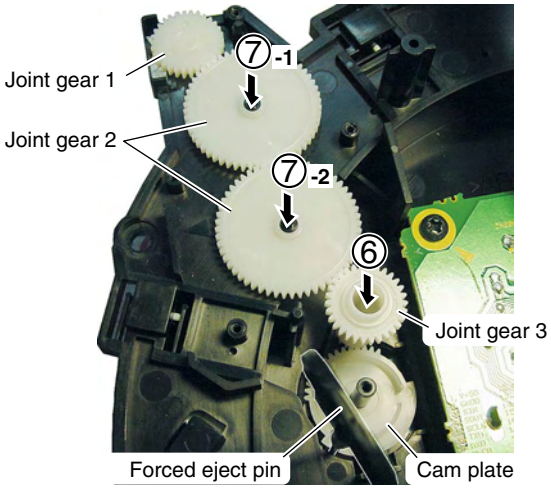

Notes on Replacement

⑧ Mount the gear plate.

⑨ Secure the gear plate, using the four screws.

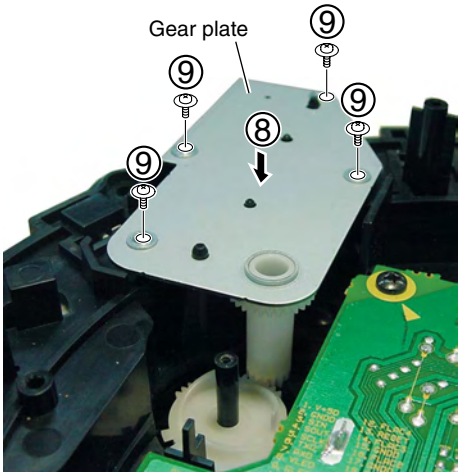

⑩ Remove the forced eject pin.

⑪ Mount the cam plate.

⑫ Install the gear spring 200.

⑬ Mount the adjust plate.

⑭ Secure the adjust plate, using one screw.

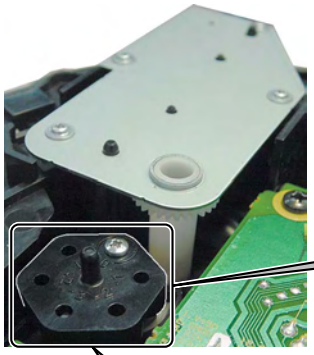

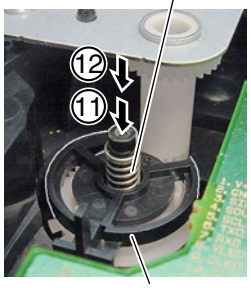

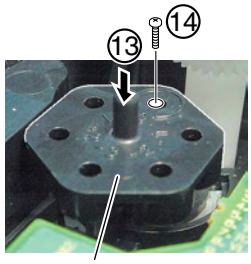

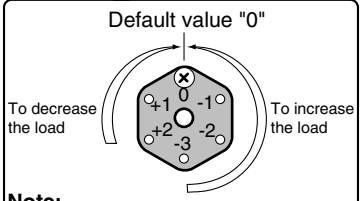

Note:
For details on adjustment, see "Load Check mode for the JOG Dial."

Notes on replacing the Sheet SW

● Place to adhere the Sheet SW

Notes:

1. Be careful not to warp the sheet SW.
2. Remove any dirt on the JOG holder to which the sheet SW is to be adhered. If some adhesive for the old sheet SW remains on the JOG holder, completely remove it with a cloth moistened with alcohol.
3. Do NOT place the sheet SW so that it is mounted on the rib of JOG holder 1000.
4. When adhering the sheet SW, be careful not to trap air bubbles in it. If air bubbles are formed, remove the sheet SW and adhere a new sheet SW.
   Do NOT reuse the removed sheet SW.
5. When making a connection, be sure to first release the lock of the connector then securely relock the connector after making the connection.

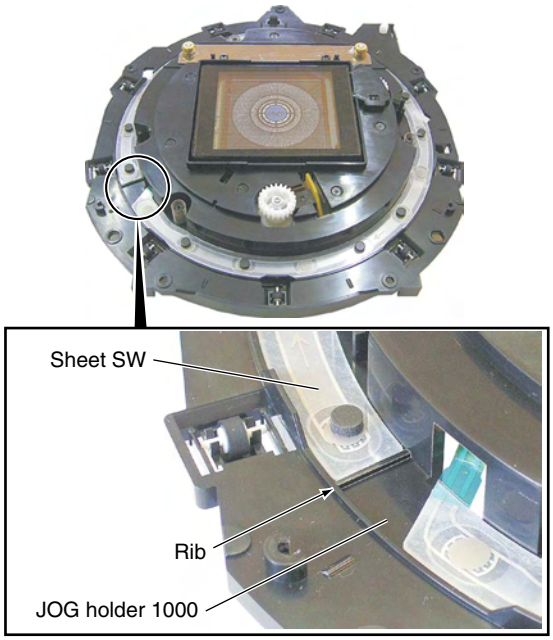

● Place to adhere the SW cushions HH48/2

Adhere the cushions to the right and left of the engraved arrows (←) (12 positions in total) on the sheet SW.

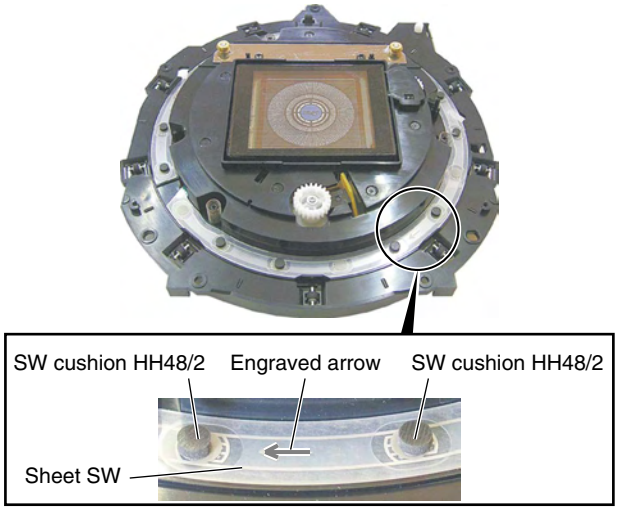

7.2 PARTS
7.2.1 IC

• The information shown in the list is basic information and may not correspond exactly to that shown in the schematic diagrams.

● List of IC
HD6417709SF133B-D, XC3S50-4TQG144C, MN103S71F, PEG237B-K

■ HD6417709SF133B-D (MAIN ASSY : IC101)
• CPU

● Pin Function

No.	Pin Name	Signal Name	I/O	Pin Function
1	MD1	SHMD1	I	Clock mode setting (pullup with 3.3V)
2	MD2	SHMD2	I	Clock mode setting (pullup with 3.3V)
3	Vcc-RTC	V+1R8	–	Power supply for RTC
4	XTAL2	N.C.	–	Not used
5	EXTAL2	–	–	Not used (connect to 1.8V power)
6	Vss-RTC	GND	–	Ground for RTC
7	NMI	–	–	Not used
8	IREQ0	TI BSREQ	I	TI DSP Input data request (↓ edge)
9	IREQ1	TI PCMREQ	I	TI DSP Output data request (↓ edge)
10	IREQ2	–	–	Not used
11	IREQ3	–	–	Not used
12	IREQ4	DIS_XCS	I	Receiving completion interrupt of FL microcomputer data (↑ edge)
13	D31	D31	–	For debugging
14	D30	D30	–	For debugging
15	D29	D29	–	For debugging
16	D28	D28	–	For debugging
17	D27	D27	–	For debugging
18	D26	D26	–	For debugging
19	VssQ	GND	–	Ground
20	D25	D25	–	For debugging
21	VccQ	V+3R3	–	Power supply for I/O (3.3V)
22	D24	D24	–	For debugging
23	D23	D23	–	For debugging
24	D22	D22	–	For debugging
25	D21	D21	–	For debugging
26	D20	D20	–	For debugging
27	Vss	GND	–	Ground
28	D19	D19	–	For debugging
29	Vcc	V+1R8	–	Power supply for core (1.8V)
30	D18	D18	–	Connect with the servo DSP (Not used, pull down)
31	D17	D17	–	Connect with the servo DSP (Not used, pull down)
32	D16	D16	–	Connect with the servo DSP (Not used, pull down)
33	VssQ	GND	–	Ground
34	D15	D15	I/O	Data bus
35	VccQ	V+3R3	–	Power supply for I/O (3.3V)
36	D14	D14	I/O	Data bus
37	D13	D13	I/O	Data bus
38	D12	D12	I/O	Data bus
39	D11	D11	I/O	Data bus
40	D10	D10	I/O	Data bus
41	D9	D9	I/O	Data bus
42	D8	D8	I/O	Data bus
43	D7	D7	I/O	Data bus
44	D6	D6	I/O	Data bus
45	VssQ	GND	–	Ground

No.	Pin Name	Signal Name	I/O	Pin Function
46	D5	D5	I/O	Data bus
47	VccQ	V+3R3	–	Power supply for I/O (3.3V)
48	D4	D4	I/O	Data bus
49	D3	D3	I/O	Data bus
50	D2	D2	I/O	Data bus
51	D1	D1	I/O	Data bus
52	D0	D0	I/O	Data bus
53	A0	A0	O	Address bus
54	A1	A1	O	Address bus
55	A2	A2	O	Address bus
56	A3	A3	O	Address bus
57	VssQ	GND	–	Ground
58	A4	A4	O	Address bus
59	VccQ	V+3R3	–	Power supply for I/O (3.3V)
60	A5	A5	O	Address bus
61	A6	A6	O	Address bus
62	A7	A7	O	Address bus
63	A8	A8	O	Address bus
64	A9	A9	O	Address bus
65	A10	A10	O	Address bus
66	A11	A11	O	Address bus
67	A12	A12	O	Address bus
68	A13	A13	O	Address bus
69	VssQ	GND	–	Ground
70	A14	A14	O	Address bus
71	VccQ	V+3R3	–	Power supply for I/O (3.3V)
72	A15	A15	O	Address bus
73	A16	A16	O	Address bus
74	A17	A17	O	Address bus
75	A18	A18	O	Address bus
76	A19	A19	O	Address bus
77	A20	A20	O	Address bus
78	A21	A21	O	Address bus
79	Vss	GND	–	Ground
80	A22	N.C.	–	Not used
81	Vcc	V+1R8	–	Power supply for core (1.8V)
82	A23	N.C.	–	Not used
83	VssQ	GND	–	Ground
84	A24	N.C.	–	Not used
85	VccQ	V+3R3	–	Power supply for I/O (3.3V)
86	A25	N.C.	–	Not used
87	BS	XBS	O	Bus cycle start signal
88	RD	XRD	O	Read strobe
89	WE0	XWE0	O	Write strobe
90	WE1	XWE1	O	Write strobe
91	WE2	N.C.	–	Not used
92	WE3	N.C.	–	Not used
93	RD/WR	RDWR	O	Read/write
94	AUDSYNC	XAUSYC	–	For development
95	VssQ	GND	–	Ground

No.	Pin Name	Signal Name	I/O	Pin Function
96	CS0	XCS0	O	Area 0 chip select
97	VccQ	V+3R3	–	Power supply for I/O (3.3V)
98	CS2	XCS2	O	Area 2 chip select
99	CS3	XCS3	O	Area 3 chip select
100	CS4	XCS4	O	Area 4 chip select
101	CS5	XCS5	O	Area 5 chip select
102	CS6	XCS6	O	Area 6 chip select
103	CE2A	N.C.	–	Not used
104	CE2B	N.C.	–	Not used
105	CKE	CKE	O	CK enable (SDRAM)
106	RAS3L	XRAS3L	O	RAS3L (SDRAM)
107	RAS2L	N.C.	–	Not used
108	CASLL	XCASLL	O	CASL (SDRAM)
109	VssQ	GND	–	GND
110	CASLH	MOT_RST	O	Reset output of Motorola DSP (reset with H)
111	VccQ	V+3R3	–	Power supply for I/O (3.3V)
112	CASHL	TI_RST	O	Reset output for TI DSP (reset with H)
113	CASHH	N.C.	–	Not used
114	DACK0	XDACK0	–	Not used (connect to FPGA)
115	DACK1	XDACK1	–	Not used (connect to FPGA)
116	CAS2L	N.C.	–	Not used
117	CAS2H	N.C.	–	Not used
118	RAS3U	DAXLAT	O	DAC latch signal
119	RAS2U	MUTE	O	Audio output stage mute (H: Mute on)
120	TDO	TDO	–	For development
121	BACK	N.C.	–	Not used
122	BREQ	–	I	Bus request (Not used, pullup with 3.3V)
123	WAIT	XWAIT	I	Hardware wait request (FPGA)
124	RESETM	–	I	Manual reset (Not used, pullup with 3.3V)
125	PTH	FPGA_DONE	I	DONE signal for FPGA configuration
126	IOIS	RY/XBY	I	Connect to flash ROM
127	ASEMD0	ASEMD0	–	For development
128	ASEBRKAK	XASKAK	–	For development
129	PTG	FPGA_XINIT	I	INIT signal for FPGA configuration
130	AUDATA3	AUDATA3	–	For development
131	AUDATA2	AUDATA2	–	For development
132	Vss	GND	–	GND
133	AUDATA1	AUDATA1	–	For development
134	Vcc	V+1R8	–	Power supply for core (1.8V)
135	AUDATA0	AUDATA0	–	For development
136	TRST	XTRST	–	For development
137	TMS	TMS	–	For development
138	TDI	TDI	–	For development
139	TCK	TCK	–	For development
140	PINT11	–	–	Not used
141	PINT10	–	–	Not used
142	PINT9	UPDATE	–	For development
143	PINT8	MOT EMPTY	I	Motorola FIFO empty signal input (High with EMPTY)
144	MDO	SHMD0	I	Clock mode setting (pull up with 3.3V)
145	Vcc-PLL1	V+1R8	–	Power supply for PLL1

No.	Pin Name	Signal Name	I/O	Pin Function
146	CAP1	–	–	External capacitor pin for PLL1
147	Vss-PLL1	GND	–	Ground for PLL1
148	Vss-PLL2	GND	–	Ground for PLL2
149	CAP2	N.C.	–	External capacitor pin for PLL2 (Not used)
150	Vcc-PLL2	V+1R8	–	Power supply for PLL2
151	AUDCK	AUDCK	–	For development
152	Vss	GND	–	Ground
153	Vss	GND	–	Ground
154	Vcc	V+1R8	–	Power supply for core (1.8V)
155	XTAL	N.C.	–	Not used
156	EXTAL	GND	–	Connect to ground
157	STATUS0	TI PCMACK	O	TI DSP output data acknowledge
158	STATUS1	TI BSACK	O	TI DSP input data acknowledge
159	TCLK	FPGA_XPRG	O	PRG signal for FPGA configuration
160	IREQOUT	N.C.	–	Not used
161	VssQ	GND	–	Ground
162	CKIO	SH_66M	I	Clock input (65.975MHz)
163	VccQ	V+3R3	–	Power supply for I/O (3.3V)
164	TxDO	CONFDAT/DASSO	O	FPGA configuration/serial data output for DAC
165	SCKO	CONFIG_CLK/DASCK	O	FPGA configuration/serial clock output for DAC
166	TxD1	N.C.	–	Not used
167	SCK1	N.C.	–	Not used
168	TxD2	TXD2	O	TXD signal for production
169	SCK2	N.C.	–	Not used
170	RTS2	N.C.	–	Not used
171	RxDO	–	–	Not used
172	RxD1	–	–	Not used
173	Vss	GND	–	Ground
174	RxD2	RxD2	I	RXD signal for production
175	Vcc	V+1R8	–	Power supply for core (1.8V)
176	CTS2	CTS2	I	Not used
177	MCS7	CONT0	O	Control signal output
178	MCS6	DMA RST	O	FPGA reset output (reset with H)
179	MCS5	CONT1	I	Control signal input
180	MCS4	CONT2	I	Control signal input
181	VssQ	GND	–	Ground
182	WACKUP	CARD RST	O	TE4300 reset output (reset with H)
183	VccQ	V+3R3	–	Power supply for I/O (3.3V)
184	RESETOUT	GSL RST	O	ATA reset output (reset with H)
185	MCS3	MCS3	–	Not used
186	MCS2	CARD XINT	I	TE4300 interrupt input
187	MCS1	ATAIRQ	I	FPGA interrupt input
188	MCS0	MCS0	–	Not used
189	DRAK0	N.C.	–	Not used
190	DRAK1	N.C.	–	Not used
191	DREQ0	XDREQ0	I	DMA request 0 (FPGA)
192	DREQ1	XDREQ1	–	Not used (connect to FPGA)
193	RESETTP	RSTCPU	I	Reset input
194	CA	CA	I	Chip active (pull up with 3.3V)
195	MD3	SHMD3	I	Clock mode setting (pull down)

No.	Pin Name	Signal Name	I/O	Pin Function
196	MD4	SHMD4	I	Clock mode setting (pull up with 3.3V)
197	MD5	SHMD5	I	Clock mode setting (pull down)
198	AVss	GND	–	Ground
199	AN0	–	–	Not used
200	AN1	–	–	Not used
201	AN2	–	–	Not used
202	AN3	–	–	Not used
203	AN4	–	–	Not used
204	AN5	–	–	Not used
205	AVcc	V+3R3	–	Analog power supply (3.3V)
206	AN6	–	–	Not used
207	AN7	–	–	Not used
208	AVss	GND	–	Ground

■ XC3S50-4TQG144C (MAIN ASSY : IC301)

• FPGA (Field Programmable Gate Array)

● Pin Function

No.	Pin Name	Signal Name	I/O	Pin Function
1	I/O DCI	N.C.	–	Not used
2	I/O DCI	TI_XCS	O	DSP (IC401) chip select signal
3	VCCO	V+3R3	–	Power supply for I/O
4	IO/VREF	TI_XHDS1	O	DSP (IC401) data strobe signal
5	I/O	DMA_XRST	I	FPGA reset input
6	I/O	ATADREQ	I	ATADMA request signal
7	I/O	ATAWR	O	ATA write signal
8	I/O	ATARD	O	ATA read signal
9	GND	GND	–	Ground
10	I/O	ATARDY	I	ATA ready signal
11	I/O	ATADACK	O	ATADMA acknowledge signal
12	I/O	ATAA1	O	ATA address bus
13	I/O	ATAA0	O	ATA address bus
14	I/O	ATAA2	O	ATA address bus
15	I/O	ATACS0	O	ATA chip select 0
16	GND	GND	–	Ground
17	I/O	ATACS1	O	ATA chip select 1
18	IO/VREF	ATA15	I/O	ATA data bus
19	VCCO	V+3R3	–	Power supply for I/O
20	IO/VREF	ATA0	I/O	ATA data bus
21	I/O	ATA14	I/O	ATA data bus
22	GND	GND	–	Ground
23	I/O	ATA1	I/O	ATA data bus
24	IO/VREF	ATA13	I/O	ATA data bus
25	I/O	ATA2	I/O	ATA data bus
26	I/O	ATA12	I/O	ATA data bus
27	I/O	ATA3	I/O	ATA data bus
28	I/O	ATA11	I/O	ATA data bus
29	GND	GND	–	Ground
30	I/O	ATA4	I/O	ATA data bus
31	I/O	ATA10	I/O	ATA data bus
32	I/O	ATA5	I/O	ATA data bus
33	I/O	ATA9	I/O	ATA data bus
34	VCCO	V+3R3	–	Power supply for I/O
35	I/O DCI	ATA6	I/O	ATA data bus
36	I/O DCI	ATA8	I/O	ATA data bus
37	M1	V+2R5FPGA	I	Configuration mode setting (connect to 2.5V)
38	M0	V+2R5FPGA	I	Configuration mode setting (connect to 2.5V)
39	M2	V+2R5FPGA	I	Configuration mode setting (connect to 2.5V)
40	I/O DUAL	ATA7	I/O	ATA data bus
41	I/O DUAL	DIS_DIN	O	FL microcomputer (IC1002) data output
42	GND	GND	–	Ground
43	VCCO	V+3R3	–	Power supply for I/O
44	IO/VREF	DIS_XCS	I	FL microcomputer (IC1002) chip select input

No.	Pin Name	Signal Name	I/O	Pin Function
45	GND	GND	–	Ground
46	I/O DUAL	DIS_DOUT	I	FL microcomputer (IC1002) data input
47	I/O DUAL	DIS_SCLK	I	FL microcomputer (IC1002) clock input
48	VCCAUX	V+2R5FPGA	–	Auxiliary power
49	VCCINT	V+1R2FPGA	–	Internal core power supply
50	I/O DUAL	SUB_CODE	I	Subcode input
51	I/O DUAL	M_DATR2	O	DSP (IC402) audio data R2 output
52	IO/GCLK2	M_DATR1	O	DSP (IC402) audio data R1 output
53	IO/GCLK3	M_DATL2	O	DSP (IC402) audio data L2 output
54	VCCO	V+3R3	–	Power supply for I/O
55	IO/GCLK0	M_DATL1	O	DSP (IC402) audio data L1 output
56	IO/GCLK1	FPGA_66M	I	System clock input
57	IO/DOUT/BUSY	N.C.	–	Not used
58	IO/INIT	FPGA_XINIT	I/O	INIT signal for FPGA configuration
59	I/O DUAL	M_DBCLK	O	DSP (IC402) audio data clock output
60	I/O DUAL	M_BCLK	O	DSP (IC402) audio data clock output
61	VCCINT	V+1R2FPGA	–	Internal core power supply
62	VCCAUX	V+2R5FPGA	–	Auxiliary power
63	I/O DUAL	M_REQ	I	DSP (IC402) request signal
64	GND	GND	–	Ground
65	IO/DIN/D0	CONFDAT	I	Data input for FPGA configuration
66	VCCO	V+3R3	–	Power supply for I/O
67	GND	GND	–	Ground
68	I/O DCI	M_XWE	O	DSP (IC402) write signal
69	I/O DCI	M_XRD	O	DSP (IC402) read signal
70	IO/VREF	M_XCS	O	DSP (IC402) chip select signal
71	DONE	FPGA_DONE	O	DONE signal for FPGA configuration
72	CCLK	CONFIG_CLK	I	Clock input for FPGA configuration
73	I/O DCI	M_VALID	O	DSP (IC402) audio data valid signal
74	I/O DCI	XWE0	I	CPU write signal
75	VCCO	V+3R3	–	Power supply for I/O
76	I/O	RDWR	I	CPU read/write signal
77	I/O	XRD	I/O	CPU data bus
78	I/O	D0	I/O	CPU data bus
79	I/O	D1	I/O	CPU data bus
80	I/O	D2	I/O	CPU data bus
81	GND	GND	–	Ground
82	I/O	D3	I/O	CPU data bus
83	I/O	D4	I/O	CPU data bus
84	IO/VREF	D5	I/O	CPU data bus
85	I/O	D6	I/O	CPU data bus
86	I/O	D7	I/O	CPU data bus
87	I/O	XWE1	I	CPU write signal
88	GND	GND	–	Ground
89	I/O	D8	I/O	CPU data bus
90	IO/VREF	D9	I/O	CPU data bus
91	VCCO	V+3R3	–	Power supply for I/O
92	IO/VREF	D10	I/O	CPU data bus
93	I/O	D11	I/O	CPU data bus
94	GND	GND	–	Ground

No.	Pin Name	Signal Name	I/O	Pin Function
95	I/O	D12	I/O	CPU data bus
96	I/O	D13	I/O	CPU data bus
97	I/O	D14	I/O	CPU data bus
98	IO/VREF	D15	I/O	CPU data bus
99	I/O	A1	I	CPU address bus
100	I/O	A2	I	CPU address bus
101	GND	GND	–	Ground
102	I/O	A3	I	CPU address bus
103	I/O	A4	I	CPU address bus
104	I/O	A5	I	CPU address bus
105	I/O	A6	I	CPU address bus
106	VCCO	V+3R3	–	Power supply for I/O
107	I/O DCI	A7	I	CPU address bus
108	I/O DCI	A8	I	CPU address bus
109	TDO	N.C.	–	Not used
110	TCK	N.C.	–	Not used
111	TMS	N.C.	–	Not used
112	I/O	A11	I	CPU address bus
113	I/O	A10	I	CPU address bus
114	GND	GND	–	Ground
115	VCCO	V+3R3	–	Power supply for I/O
116	I/O	A9	I	CPU address bus
117	GND	GND	–	Ground
118	I/O	N.C.	–	Not used
119	I/O	CARD_XRD	O	TE4300 (IC403) read signal
120	VCCAUX	V+2R5FPGA	–	Auxiliary power
121	VCCINT	V+1R2FPGA	–	Internal core power supply
122	I/O	CARD_XCS	O	TE4300 (IC403) chip select signal
123	IO/VREF	CARD_XWR	O	TE4300 (IC403) write signal
124	IO/GCLK4	XBS	I	CPU bus cycle signal
125	IO/GCLK5	N.C.	–	Not used
126	VCCO	V+3R3	–	Power supply for I/O
127	IO/GCLK6	XCS2	I	CPU area 2 chip select signal
128	IO/GCLK7	XCS4	I	CPU area 4 chip select signal
129	IO/VREF	XCS5	I	CPU area 5 chip select signal
130	I/O	XCS6	I	CPU area 6 chip select signal
131	I/O	XDACK0	–	Not used (connect to CPU)
132	I/O	XDACK1	–	Not used (connect to CPU)
133	VCCINT	V+1R2FPGA	–	Internal core power supply
134	VCCAUX	V+2R5FPGA	–	Auxiliary power
135	I/O	XWAIT	O	CPU wait signal
136	GND	GND	–	Ground
137	I/O	XDREQ0	O	CPUDMA request output 0
138	VCCO	V+3R3	–	Power supply for I/O
139	GND	GND	–	Ground
140	I/O DCI	XDREQ1	–	Not used (connect to CPU)
141	I/O DCI	TI_HRDY	I	DSP (IC401) data ready signal
142	HSWAP_EN	V+2R5FPGA	I	Bus state setting in configuration (pull down)
143	PROG_B	FPGA_XPRG	I	PRG signal for FPGA configuration
144	TDI	N.C.	I	Not used

■ MN103S71F (MAIN ASSY : IC603)

• SODC

● Pin Function

No.	Mark	Pin Name	I/O	Pin Function
1	P2	XDMUTE1	O	Mute control of driver IC
2	P3	XDMUTE2	O	Mute control of driver IC
3	P4/EXCNT0	ILMUSK	I	Connect to VSS
4	VDD3	VDD3	–	Power supply (VD3V)
5	VSS	VSS	–	GNDD
6	P5/EXCNT1	INSIDE	I	Servo mecha inside SW input (L: ON)
7	P6/NSPCCS	SPGAIN	O	SPDL motor current switching control (at inversion brakes: H)
8	P7/FADR17	FADR17/NSPCCS	O	Address output to FLASH ROM
9	P8/FADR18	FADR18	O	NC
10	FADR11	FADR11	O	Address output to FLASH ROM
11	FADR9	FADR9	O	Address output to FLASH ROM
12	VDD15	VDD15	–	Power supply (VD1R5)
13	FADR8	FADR8	O	Address output to FLASH ROM
14	FADR13	FADR13	O	Address output to FLASH ROM
15	FADR14	FADR14	O	Address output to FLASH ROM
16	NWE	NWE	O	Write enable output to FLASH ROM
17	FADR16	FADR16	O	Address output to FLASH ROM
18	FADR15	FADR15	O	Address output to FLASH ROM
19	DRAMVDD15	DRAMVDD15	–	DRAM power supply (DRAMD1R5)
20	DRAMVSS	DRAMVSS	–	GND for DRAM
21	VSS	VSS	–	GNDD
22	FADR12	FADR12	O	Address output to FLASH ROM
23	FADR7	FADR7	O	Address output to FLASH ROM
24	FADR6	FADR6	O	Address output to FLASH ROM
25	FADR5	FADR5	O	Address output to FLASH ROM
26	FADR4	FADR4	O	Address output to FLASH ROM
27	FADR3	FADR3	O	Address output to FLASH ROM
28	FADR2	FADR2	O	Address output to FLASH ROM
29	FADR1	FADR1	O	Address output to FLASH ROM
30	FADR0	FADR0	O	Address output to FLASH ROM
31	VSS	VSS	–	GNDD
32	VDD3	VDD3	–	Power supply (VD3V)
33	FDT0	FDT0	I/O	Data input/output to FLASH ROM
34	FDT1	FDT1	I/O	Data input/output to FLASH ROM
35	FDT2	FDT2	I/O	Data input/output to FLASH ROM
36	FDT3	FDT3	I/O	Data input/output to FLASH ROM
37	FDT4	FDT4	I/O	Data input/output to FLASH ROM
38	FDT5	FDT5	I/O	Data input/output to FLASH ROM
39	FDT6	FDT6	I/O	Data input/output to FLASH ROM
40	FDT7	FDT7	I/O	Data input/output to FLASH ROM
41	NCE	NCE	O	Chip enable output to FLASH ROM
42	FADR10	FADR10	O	Address output to FLASH ROM
43	NOE	NOE	O	Output enable output to FLASH ROM
44	MMOD	MMOD	I	Connect to VSS

No.	Mark	Pin Name	I/O	Pin Function
45	NRST	NRST	I	Hardware reset input
46	VSS	VSS	–	GNDD
47	SCLOCK	SCLOCK	I/O	NC
48	SDATA	SDATA	I/O	NC
49	TxD/EXTRG0/MDATA	TXD	I/O	NC
50	RxD/EXTRG1/MCLOCK	RXD	I/O	NC
51	VDD3	VDD3	–	Power supply (VD3V)
52	OSCI	OSCI	I	Oscillation input
53	OSCO	OSCO	O	Oscillation output (16.93MHz)
54	VSS	VSS	–	GNDD
55	DRV0	DRV0(VRCAP)	O	NC
56	DRV1	DRV1(SPDRV)	O	Spindle motor control
57	DRV2	DRV2(FBAL)	O	Focus balance control
58	DRV3	DRV3(TBAL)	O	NC
59	DRV4	DRV4(STPM1P)	O	Stepping motor control
60	DRV5	DRV5(STPM1N)	O	Stepping motor control
61	DRV6	DRV6(6VRSW)	O	NC
62	DRV7	DRV7(7VRSW)	O	NC
63	VSS	VSS	–	GNDD
64	DRV8	DRV8(FCSG)	O	NC
65	DRV9	DRV9(NFEPRST)	O	NC
66	DRV10	DRV10	O	NC
67	DRV11	DRV11(LOAD)	O	Loading motor control
68	DRV12	DRV12(FEPCK)	O	Clock output to FEP
69	DRV13	DRV13(FEPDT)	I/O	Data input/output to FEP
70	DRV14	DRV14(FEPEN)	O	Enable output to FEP
71	DRAMVSS	DRAMVSS	–	GND for DRAM
72	DRAMVDD15	DRAMVDD15	–	DRAM power supply (DRAMD1R5)
73	DRAMVDD33	DRAMVDD33	–	Power supply (VD3V)
74	VDD3	VDD3	–	Power supply (VD3V)
75	FG	FG	I	Spindle motor FG input
76	TX	TX	O	NC
77	VDD15	VDD15	–	Power supply (VD1R5)
78	VSS	VSS	–	GNDD
79	TSTSG	TSTSG	O	EQ calibration signal to FEP
80	VFOSHORT	VFOSHORT	O	VFO short control
81	JLINE	JLINE	O	NC
82	BDO	BDO	I	BDO (Black Dog Out) input
83	OFTR	OFTR	I	OFTR (Off Track) input
84	AVSSD	AVSSD	–	GNDA
85	ROUT	ROUT	O	NC
86	LOUT	LOUT	O	NC
87	AVDDD	AVDDD	–	Power supply (VA3V)
88	VCOF	VCOF	I	VCO control voltage
89	TRCRS	TRCRS	I	Input for TRCRS (Track Cross) generation
90	AVDDC	AVDDC	–	Power supply (VA3V)
91	WBLIN	WBLIN	I	Connect to VSS
92	CSLFLT	CSLFLT	I	NC
93	RFDIF	RFDIF	I	NC
94	AVSSC	AVSSC	–	GNDA

No.	Mark	Pin Name	I/O	Pin Function
95	PLFLT2	PLFLT2	I	Connect a capacitor for PLL
96	PLFLT1	PLFLT1	I	Connect a capacitor for PLL
97	AVSSB	AVSSB	–	GNDA
98	ARF	ARF	I	RF+ input
99	NARF	NARF	I	RF- input
100	VHALF	VHALF	I	Reference voltage (1.65V) input
101	RVI	RVI	I	VREFH reference current control
102	VREFH	VREFH	I	Reference voltage (2.2V) input
103	DSLF2	DSLF2	I	Connect a capacitor for DSL (Data SLicer)
104	DSLF1	DSLF1	I	Connect a capacitor for DSL (Data SLicer)
105	AVDDB	AVDDB	–	Power supply (VA3V)
106	JITOUT	JITOUT	O	Jitter monitor output
107	AVDDA	AVDDA	–	Power supply (VA3V)
108	TECAPA	TECAPA	I	NC
109	AD0	AD0(FE)	I	Focus error input
110	AD2	AD2(AS)	I	RFAS input
111	AD1	AD(TE)	I	Tracking error input
112	AD3	AD3(RFENV)	I	RF envelope input
113	AD4	AD4(RFDIF)	I	Radial differential input
114	AD5	AD5(FEDRV)	I	Focus drive input
115	AD6	AD6(TEDRV)	I	Tracking drive input
116	AD7	AD7(T+)	I	Connect to VSS
117	AD8	AD8(T-)	I	Connect to VSS
118	AVSSA	AVSSA	–	GNDA
119	PWM0	PWM0	O	Focus drive control
120	PWM1	PWM1	O	Tracking drive control
121	VSS	VSS	–	GNDD
122	VDD3	VDD3	–	Power supply (VD3V)
123	IDGT	IDGT	O	NC
124	DTR	DTR	O	NC
125	MONI0/P9	BUSY/MONI0	I/O	Monitor output
126	MONI1/P10	NAMUTE/MONI1	I/O	Monitor output
127	MONI2/P11	NDMUTE1/MONI2	I/O	Monitor output
128	MONI3/P12	NDMUTE2/MONI3	I/O	Monitor output
129	MSTPOL/MONI4	MSTPOL/MONI4	I	
130	DASPST/MONI5	DASPST/MONI5	I	Connect to VSS
131	NEJECT/MONI6	NEJECT/MONI6	O	NC
132	NTRYCL/MONI7	NTRYCL/MONI7	O	NC
133	DMARQ	DMARQ	O	DMA request output to the host
134	NIOWR	NIOWR	I	Host write input
135	VDD3	VDD3	–	Power supply (VD3V)
136	VSS	VSS	–	GNDD
137	NIORD	NIORD	I	Host read input
138	IODRY	IODRY	O	Ready output to the host
139	NDMACK	NDMACK	I	Host DMA acknowledge input
140	INTRQ	INTRQ	O	Interrupt output to the host
141	NIOCS16	NIOCS16	O	Data bus width select
142	DA1	DA1	I	Assress input
143	NPDIAG	NPDIAG	I/O	
144	DA0	DA0	I	Assress input

No.	Mark	Pin Name	I/O	Pin Function
145	VSS	VSS	–	GNDD
146	VDD3	VDD3	–	Power supply (VD3V)
147	DA2	DA2	I	Address input
148	NCS1FX	NCS1FX	I	Chip select input
149	NCS3FX	NCS3FX	I	Chip select input
150	NDASP	NDASP	I/O	
151	HDD15	HDD15	I/O	Data input/output
152	HDD0	HDD0	I/O	Data input/output
153	HDD14	HDD14	I/O	Data input/output
154	HDD1	HDD1	I/O	Data input/output
155	HDD13	HDD13	I/O	Data input/output
156	VDD3	VDD3	–	Power supply (VD3V)
157	VDD15	VDD15	–	Power supply (VD1R5)
158	VSS	VSS	–	GNDD
159	HDD2	HDD2	I/O	Data input/output
160	HDD12	HDD12	I/O	Data input/output
161	HDD3	HDD3	I/O	Data input/output
162	HDD11	HDD11	I/O	Data input/output
163	HDD4	HDD4	I/O	Data input/output
164	HDD10	HDD10	I/O	Data input/output
165	HDD5	HDD5	I/O	Data input/output
166	VSS	VSS	–	GNDD
167	VDD3	VDD3	–	Power supply (VD3V)
168	HDD9	HDD9	I/O	Data input/output
169	HDD6	HDD6	I/O	Data input/output
170	HDD8	HDD8	I/O	Data input/output
171	HDD7	HDD7	I/O	Data input/output
172	VDDH	VDDH	–	Power supply (VD5V)
173	NRESET	NRESET	I	Reset input from the host
174	MASTER	MASTER	I	Connect to VSS
175	P0/SERIAL	LPS1	I	Loading mecha SW input
176	P1/SERIAL	LPS2	I	Loading mecha SW input

■ PEG237B-K (MFLB ASSY : IC1002)

• FL Microcomputer

● Pin Function

No.	Pin Name	Signal Name	I/O	Pin Function
1	P96/ANEX1	T/B	I	VINYL SPEED ADJUST input Clockwise direction: Vcc side
2	P95/ANEX0	R/S	I	VINYL SPEED ADJUST input Clockwise direction: Vcc side
3	P94	MODEL1	I	Model setting 1 (pull up with 5V) Distinguish between CDJ-800MK2 and CDJ-1000MK3.
4	P93/DA0	MODEL2	I	Model setting 2 (pull up with 5V) Distinguish between CDJ-800MK2 and CDJ-1000MK3.
5	P92/TB2IN	N.C.	–	Not used
6	P91/TB1IN	JOG1	I	Pulse period measurement processing (connect to JOG1)
7	P90/TB0IN	N.C.	–	Not used
8	BYTE	–	–	Not used (Connect to GND)
9	CNVss	CNVSS	–	Not used (GND pull down)
10	P87/XCIN	–	–	Not used (Connect to GND)
11	P86/XCOUT	–	–	Not used (Connect to GND)
12	XRESET	XRESET	I	Reset input
13	Xout	XOUT	O	Oscillator (16MHz)
14	Vss	GNDD	–	GND
15	Xin	XIN	I	Oscillator (16MHz)
16	Vcc1	V+5D	–	Power supply
17	P85/XNMI	XNMI	I	Not used (pull up with 5V)
18	P84/XINT2	–	–	Not used (connect to 5V)
19	P83/XINT1	–	–	Not used (connect to 5V)
20	P82/XINT0	–	–	Not used (connect to 5V)
21	P81	–	–	Not used (connect to 5V)
22	P80	–	–	Not used (connect to 5V)
23	P77	–	–	Not used (connect to 5V)
24	P76	–	–	Not used (connect to 5V)
25	P75/TA2IN	JOG2	I	Two-phase pulse signal input When input signal of TA2OUT pin is period of "H", up count (clockwise) at rising edge of TA2IN pin, down count (counterclockwise) at falling edge.
26	P74/TA2OUT	JOG1	I	
27	P73/XCTS2/XRTS2/TA1IN	TCH	I	JOG touch sensor ON with L
28	P72/CLK2/TA1OUT	J_SCLK	O	Serial clock signal for JOG FL
29	P71/RxD2/SCL2/TA0IN	N.C.	–	Not used
30	P70/TXD2/SDA2/TA1OUT	J_SDO	O	Serial data signal for JOG FL
31	P67/TXD1/SDA1	FL_SDO	O	Serial data signal for data FL
32	P66/RxD1/SCL1	RXD	I	For development
33	P65/CLK1	FL_SCLK	O	Serial clock signal for data FL
34	P64/XCTS1/XRTS1/XCTS0/XCLKS1	F_BUSY	I	For development
35	P63/TXD0/SDA0	SDO	O	Data output of main communication
36	P62/RxD0/SCL0	SIN	I	Data input of main communication
37	P61/CLK0	SCLK	O	Clock output of main communication
38	P60/XCTS0/XRTS0	XCS	O	Chip select output of main communication
39	P57/CLKOUT	N.C.	–	Not used
40	P56	N.C.	–	Not used
41	P55	–	I	Not used (pull down)
42	P54	DFL_LAT	O	Latch signal for data FL
43	P53	DFL_BK	O	Blank signal for data FL
44	P52	J_LAT	O	Latch signal for JOG FL
45	P51	J_BK	O	Blank signal for JOG FL
46	P50	–	–	Not used (pull up with 5V)
47	P47	LED_24	O	LED (CARD_IND • yellow/green) Turn off the light with L.
48	P46	LED_23	O	LED (CDJ • yellow/green) Turn off the light with L.
49	P45	LED_22	O	LED (VINYL • blue) Turn off the light with L.
50	P44	LED_21	O	LED (TEMPO_RESET • yellow/green) Turn off the light with L.

No.	Pin Name	Signal Name	I/O	Pin Function
51	P43	LED_20	O	LED (MASTER_TEMPO • Red) Turn off the light with L.
52	P42	N.C.	–	Not used
53	P41	N.C.	–	Not used
54	P40	N.C.	–	Not used
55	P37	N.C.	–	Not used
56	P36	LED_15	O	LED (CUEC • Amber) Turn off the light with L.
57	P35	LED_14	O	LED (CUEC • Green) Turn off the light with L.
58	P34	LED_13	O	LED (CUEC • Red) Turn off the light with L.
59	P33	LED_12	O	LED (CUEB • Amber) Turn off the light with L.
60	P32	LED_11	O	LED (CUEB • Green) Turn off the light with L.
61	P31	LED_10	O	LED (CUEB • Red) Turn off the light with L.
62	Vcc2	+V5	–	Power supply
63	P30	LED_09	O	LED (CUEA • Amber) Turn off the light with L.
64	Vss	GNDD	–	GND
65	P27	LED_08	O	LED (CUEA • Green) Turn off the light with L.
66	P26	LED_07	O	LED (CUEA • Red) Turn off the light with L.
67	P25	LED_06	O	LED (DIRECTION_REV • Red) Turn off the light with L.
68	P24	LED_05	O	LED (RELOOP • Amber) Turn off the light with L.
69	P23	LED_04	O	LED (LOOP_OUT • Amber) Turn off the light with L.
70	P22	LED_03	O	LED (LOOP_IN • Amber) Turn off the light with L.
71	P21	LED_02	O	LED (CUE • Amber) Turn off the light with L.
72	P20	LED_01	O	LED (PLAY/PAUSE • Green) Turn off the light with L.
73	P17	ELOCK	I	EJECT LOCK SW
74	P16/XINT4	SW0	I	DIRECTION SW
75	P15/XINT3	–	–	Not used (Connect to GND)
76	P14	–	–	Not used (Connect to GND)
77	P13	–	–	Not used (Connect to GND)
78	P12	–	–	Not used (Connect to GND)
79	P11	–	–	Not used (Connect to GND)
80	P10	–	–	Not used (Connect to GND)
81	P07/AN0_7	CUEC	I	Key input (CUEC) L: ON
82	P06/AN0_6	CUEB	I	Key input (CUEB) L: ON
83	P05/AN0_5	CUEA	I	Key input (CUEA) L: ON
84	P04/AN0_4	RELP	I	Key input (RELOOP) L: ON
85	P03/AN0_3	LOOPOUT	I	Key input (LOOP_OUT) L: ON
86	P02/AN0_2	LOOPIN	I	Key input (LOOP_IN) L: ON
87	P01/AN0_1	CUE	I	Key input (CUE) L: ON
88	P00/AN0_0	PLAY	I	Key input (PLAY/PAUSE) L: ON
89	P107/AN7/XKI3	ADCT	I	Slider center value adjustment
90	P106/AN6/XKI2	ADIN	I	Tempo slider input + direction: Vcc side, – direction: GND side
91	P105/AN5/XKI1	KEY0	I	Key input 0 (AD input)
92	P104/AN4/XKI0	KEY1	I	Key input 1 (AD input)
93	P103/AN3	KEY2	I	Key input 2 (AD input)
94	P102/AN2	–	–	Not used (Connect to GND)
95	P101/AN1	–	–	Not used (Connect to GND)
96	AVSS	GNDD	–	GND
97	P100/AN0	–	–	Not used (Connect to GND)
98	VREF	V+5D	–	Reference voltage input of A/D converter
99	AVcc	V+5D	–	Reference voltage input of A/D converter
100	P97/XADTRG	–	–	Not used (Connect to GND)

8. PANEL FACILITIES
8.1 PANEL SECTION

Upper Panel

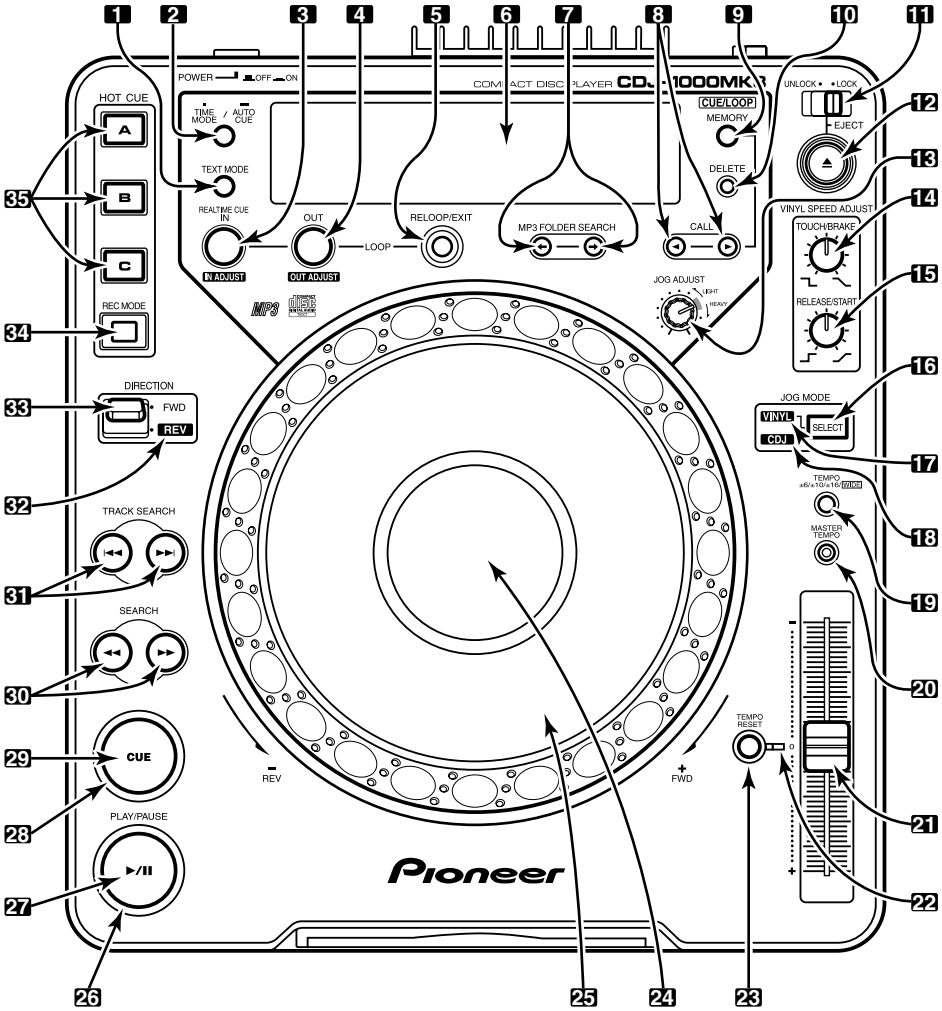

Rear Panel

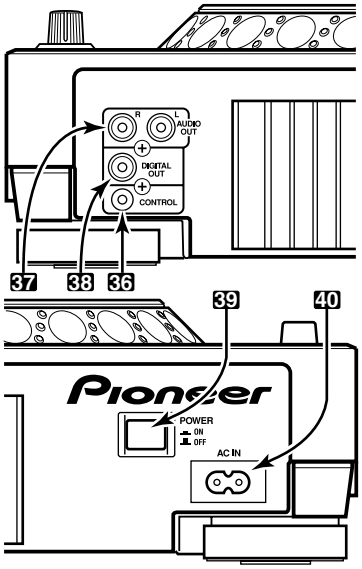

Front Panel

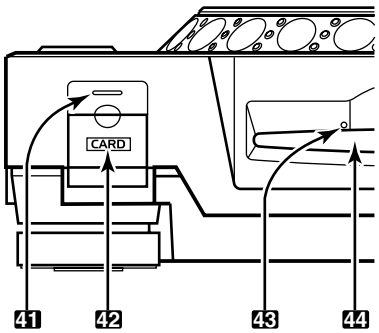

1. Display selector button (TEXT MODE)
Each time this button is pressed, the display alternates between WAVE and TEXT (track name/album name/artist name).
When playing MP3, WAVE display may not be possible, depending on the track.

2. TIME MODE/AUTO CUE button
TIME MODE:
Each time the button is pressed, the display's time display alternates between the current elapsed play time and the remaining play time (**REMAIN**).
When playing MP3, the REMAIN time may not display immediately, depending on the track.
- The current TIME MODE setting is retained in memory even when the power is turned off.

AUTO CUE:
When the button is held depressed for 1 second or more, the AUTO CUE mode is alternately enabled and disabled.
When the button is held depressed for 5 seconds or more, the AUTO CUE level is toggled.
- The current AUTO CUE on/off and AUTO CUE level settings are retained in memory even when power is turned off.

3. LOOP IN/REALTIME CUE (IN ADJUST) button/indicator
Realtime cue
Loop-in point input
Loop-in point adjust

4. LOOP OUT (OUT ADJUST) button/indicator
Loop-out point input
Loop-out point adjust

5. RELOOP/EXIT button

6. Display

7. FOLDER SEARCH buttons (⬅, ➡)
During MP3 playback, layered CD-ROM folder search will be performed in the designated direction.

8. CUE/LOOP CALL buttons (◄, ►)
Use to call cue points and loop points recorded in external memory (when memory card is loaded).

9. CUE/LOOP MEMORY button
Use to record cue points and loop points to external memory (when memory card is loaded).

10. CUE/LOOP DELETE button
Use to delete cue points and loop points from external memory (when memory card is loaded).

11. EJECT UNLOCK/LOCK switch
UNLOCK: Disc is ejected when button is pressed, even if pressed during play.
LOCK: Disc cannot be ejected if button is pressed during play. Set unit to pause mode and then press button to eject disc.

12. EJECT button (⏏)
When button is pressed, disc rotation stops and disc is ejected from port.
If the **EJECT UNLOCK/LOCK** switch is set to the [**LOCK**] position, the disc will not be ejected unless the unit is set to the pause mode before pressing the **EJECT** button.

13. JOG ADJUST dial
Use to adjust the felt resistance (light/heavy) of the jog dial when it is rotated.

14. VINYL SPEED ADJUST TOUCH/BRAKE dial
When the **JOG MODE SELECT** button is set to [**VINYL**], this dial determines the deceleration speed until play stops when the surface of the jog dial is pressed or the **PLAY/PAUSE** button is pressed.
When the **VINYL SPEED ADJUST TOUCH/BRAKE** dial is rotated counterclockwise, play stops quickly; when the dial is rotated clockwise, play decelerates more slowly before coming to a stop.

15. VINYL SPEED ADJUST RELEASE/START dial
When the **JOG MODE SELECT** button is set to [**VINYL**], this dial determines the acceleration speed until full playback speed is reached when the jog dial is released or the **PLAY/PAUSE** button is pressed.
When the **VINYL SPEED ADJUST RELEASE/START** dial is rotated counterclockwise, play accelerates to full speed quickly; when the dial is rotated clockwise, play accelerates more slowly before reaching full speed.

16. JOG MODE SELECT button
VINYL mode: When the surface of the jog dial is pressed during playback, play stops, and if the jog dial is then rotated, sound is produced in accordance with the degree of rotation.
● The currently set jog mode is stored in memory even when power is turned off.
CDJ mode: The above action does not occur when the jog dial is pressed.

17. VINYL indicator
Lights when jog mode is set to VINYL mode.

18. CDJ indicator
Lights when jog mode is set to CDJ mode.

19. TEMPO control range selector button (TEMPO ±6/±10/±16/WIDE)
Each time this button is pressed, the tempo adjust slider's variable range alternates between ±6 %, ±10 %, ±16 % and WIDE.

20. MASTER TEMPO button/indicator
When pressed, the master tempo function alternates ON/OFF.

21. Tempo adjust slider
When moved toward the user (+ front), the track tempo increases, and when moved away from the user (- rear), the tempo decreases.

22. Tempo reset indicator
Regardless of the position of the tempo adjust slider, this indicator lights when the tempo adjustment is at "0" (normal tempo).

23. TEMPO RESET button
Regardless of the position of the tempo adjust slider, pressing this button causes the tempo to be reset instantly to "0" (normal tempo). Pressing the button once again releases the reset.

24. Jog dial display

25. Jog dial (+FWD/-REV)

26. Play/pause indicator
Lights during playback, and flashes during pause mode.

27. PLAY/PAUSE button (▶/II)

28. Cue indicator
When a cue point has been set, lights except during search. Flashes in the pause mode to slow that a new cue point can be input.

29. CUE button
Cue point setting
Back cue
Cue point sampler

30. SEARCH buttons (◀◀, ▶▶)

31. TRACK SEARCH buttons (|◀◀, ▶▶|)

32. Reverse indicator (REV)
Lights when **DIRECTION** selector switch is set to reverse [**REV**].

33. DIRECTION selector switch (FWD/REV)
When set to [**REV**] (near side), reverse play is enabled.

34. HOT CUE REC MODE button
Switches the function of the **HOT CUE** button (record/call)
● Defaults to call mode when power is first turned on.

35. HOT CUE button/indicator (A, B, C)
When the indicators A, B, C light red, the hot cue point recording mode is enabled for that point. When any of the indicators A, B, C light green (HOT CUE point) or orange (HOT LOOP point), the respective call-up mode is enabled, and if the corresponding button is pressed, playback starts from the set hot cue (loop) point. When an indicator is not lighted, no hot cue (loop) point has been recorded.

Rear Panel

36. CONTROL connector
When the accessory control cord is used to connect this connector to the corresponding CONTROL connector on a Pioneer DJ mixer, the DJ mixer can be used to control the CD player for fader start play and back cue.
Also, by connecting this connector to the CONTROL connector on another Pioneer DJ CD player, automatic relay play can be performed.

37. AUDIO OUT L, R connectors
RCA-type analog audio output jacks.

38. DIGITAL OUT connector
RCA type coaxial digital output connectors used to connect a DJ mixer or AV amplifier, CD player, etc., equipped with digital input connectors. The digital outputs here support all DJ and other functions, but only audio data is output (without subcodes; CD graphics are not supported).

39. POWER ▮ OFF/▂ ON switch

40. AC inlet (AC IN)
Use the accessory power cord to connect this inlet to a standard AC power outlet.

Front Panel

41. Memory card indicator
This indicator lights with a memory card is loaded and the door is closed, and flashes during memory card access.
● Do not open the door or turn off power while the indicator is flashing.

42. Memory card door and slot

43. Forced eject hole

44. Disc loading slot

8.2 DISPLAY SECTION

Display Section

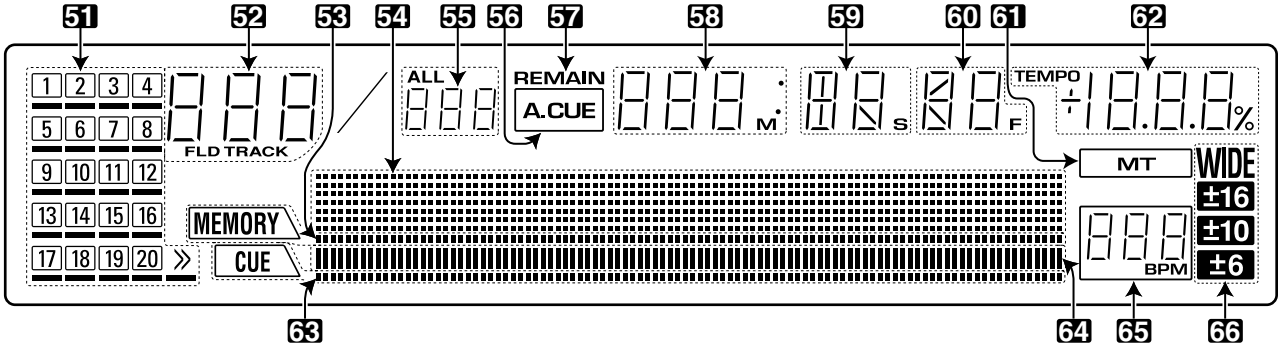

51. Calendar display (1 to 20, >>)
The tracks following the currently playing track are lighted.
If more than 21 following tracks are set, the >> indicator will light.
An underline appears underneath track numbers for which cue points or loops have been set.

52. Track number/folder number display (TRACK/FLD)
When playing an audio CD, the [**TRACK**] indicator lights, and the two-digit track number appears (01 to 99).
When playing MP3, [**TRACK**] lights and the track number is displayed (01 to 999). During folder search, the [**FLD**] indicator lights, and a two-digit folder number is displayed (00 to 99).

53. MEMORY display
If the currently selected track includes cue memory or loop memory, the [**MEMORY**] indicator lights and the MEMORY display indicates the relative starting position of the cue or loop. Two dots are used to display 1 point, and even if multiple starting positions are included within a single point, only one point is displayed.

54. Dot matrix display (100x7 dots)
The dot matrix is used to display TEXT, WAVE, guides and other information. Text up to 48 characters can be displayed (text longer than 16 characters is scrolled).
When WAVE display is used, the entire track is scaled so as to fit into the width of the display (100 dots width), with playback level shown across the display.

55. ALL track number display
When playing an audio CD, this display shows the total number of tracks on the disc. During MP3 playback, the number of tracks inside the folder is shown.

56. Auto cue indicator (A.CUE)
Lights when auto cue is ON.

57. REMAIN indicator
This indicator lights to indicate that track's remaining time is being displayed.

58. Time (minutes) display (M)

59. Time (seconds) display (S)

60. Frame display (F)
Seventy-five frames equal one second.

61. Master tempo indicator (MT)
Lights when the master tempo function is ON.

62. TEMPO display
Displays change in playing speed (tempo) caused by movement of the tempo adjust slider.

63. CUE point indicator
When a point is recorded in the **CUE** button or **LOOP IN** button for the currently selected track, the [**CUE**] indicator lights and the point's relative starting position is shown in the display (2 lighted dots).

64. Playing address display
To provided a quick grasp of the current track's elapsed time and remaining playing time, the entire track is shown as a bar graph scaled over the entire width of the display.

- During elapsed time display, the bar graph's indicator segments turn on from left to right.
- During remaining time display, the bar graph indicator segments turn off from left to right.
- When a track has less than 30 seconds of remaining play time, the graph flashes slowly; when less than 15 seconds remain, the flashing becomes quicker.

65. BPM display (0 to 360 BPM)
This display shows the Beats-Per-Minute (BPM) of the currently playing track (detection range 70 to 180 BPM). The automatic BPM counter may be unable to compute the correct BPM for some tracks.

66. Tempo control range display (±6, ±10, ±16, WIDE)
Displays the variable range of the tempo adjust slider as selected with the tempo control range selector button.

Jog dial display

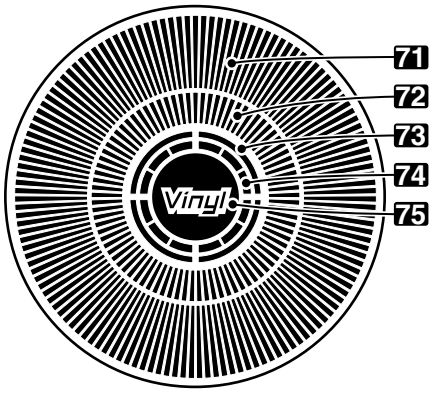

71. Operation display
This display shows the relative playing position, with one revolution equivalent to 135 frames. During playback, the display rotates, and it stops during pause mode.

72. Cue point position indicator
Indicates position of cue points.

73. Audio memory status indicator
This indicator flashes during audio memory write, and lights when writing has been sufficiently completed. When the indicator is flashing, it may not be possible to record real time cue points, or hot cue points. The indicator also flashes when memory insufficiency occurs due to scratch operation.

74. Jog touch detection indicator
In VINYL mode, this indicator lights to indicate that the jog dial surface has been touched.

75. VINYL mode indicator
Lights during VINYL mode.

■ Lubricants List

Name	Part No.	Remarks
Grease	GYA1001 (ZLB-PN397B)	Refer to "2.3 CONTROL PANEL SECTION", "2.4 SLOT-IN MECHA. SECTION", "2.5 TRAVERSE MECHA. Assy-S".
Grease	GEM1007 (ZLB-PN948P)	Refer to "2.5 TRAVERSE MECHA. Assy-S".
Dyefree	GEM1036 (ZLX-ME413A)	Refer to "2.4 SLOT-IN MECHA. SECTION".
Grease	(ZLB-HFD1600)	Refer to "2.3 CONTROL PANEL SECTION".

■ Cleaning

Name	Part No.	Remarks
Cleaning liquid	GEM1004	Used to pickup lens cleaning. Refer to "2.5 TRAVERSE MECHA. Assy-S", "7.1.3 DISASSEMBLY".
Cleaning paper	GED-008	