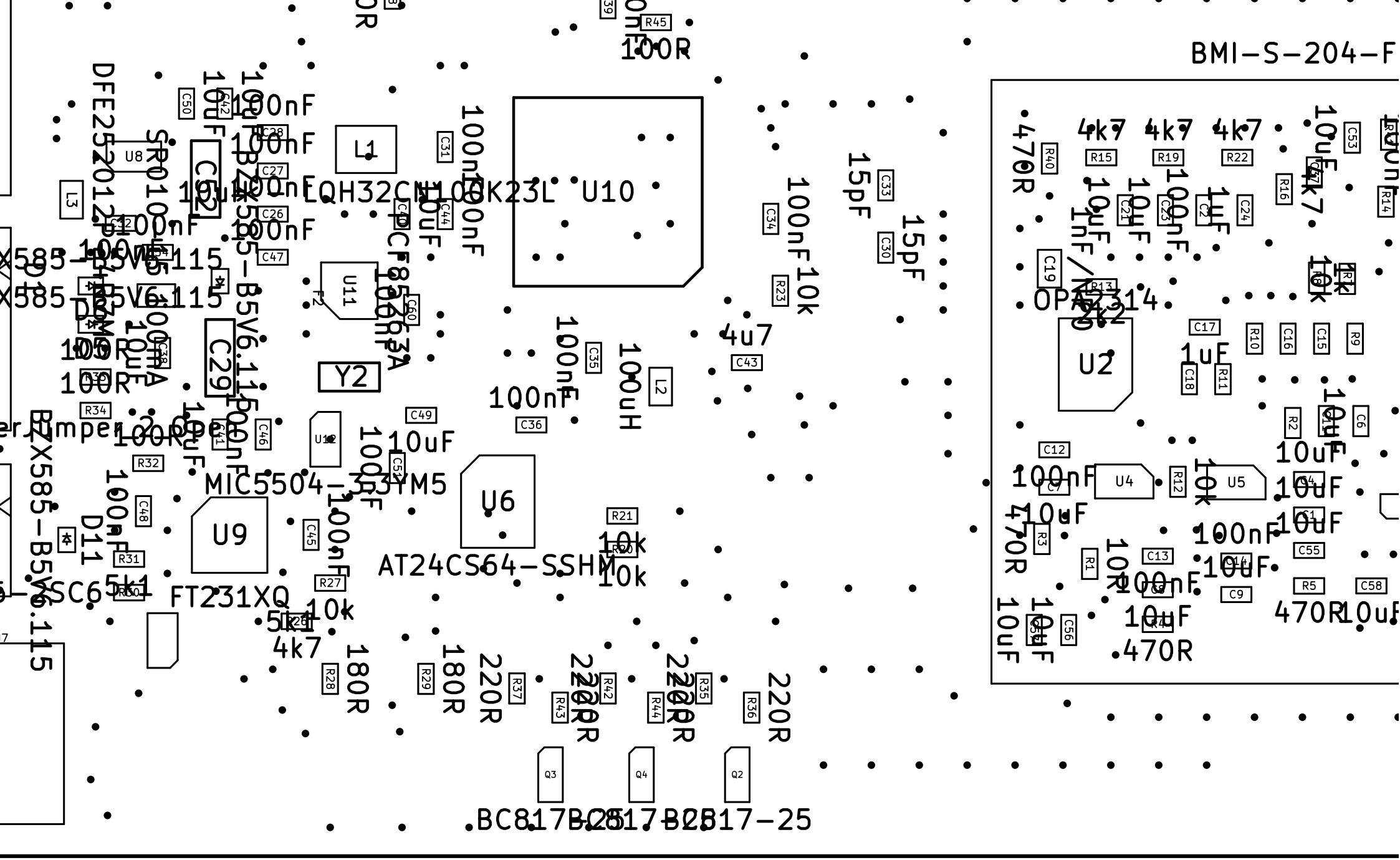
BMI-S-204-F
OPA2314
U2
U4
U5
4k7
470R
10uF
100nF
1uF
10k
U10
EQH32CN100K23L
L1
L2
100uH
U11
Y2
U6
AT24CS64-SSHM
U9
MIC5504-3.3YM5
FT231XQ
U8
SR0100
DFE252012
C52
C29
D11
BZX585-B5V6.115
BC817-25
Q3
Q4
Q2
R45
100R
15pF
4u7
180R
220R
5k1
4k7
R21
R20
R27
R28
R29
R37
R42
R43
R44
R35
R36
R31
R32
R34
R30
R26
R40
R15
R19
R22
R16
R14
R13
R10
R11
R9
R2
R12
R3
R1
R4
R5
C53
C47
C50
C28
C27
C26
C31
C44
C60
C35
C36
C49
C46
C45
C48
C41
C51
C30
C33
C34
C43
C19
C17
C18
C16
C15
C6
C12
C7
C13
C9
C55
C58
C56
C54
C1
C4
C14
C2
C24
C23
C21
C22
C20
C38
C39