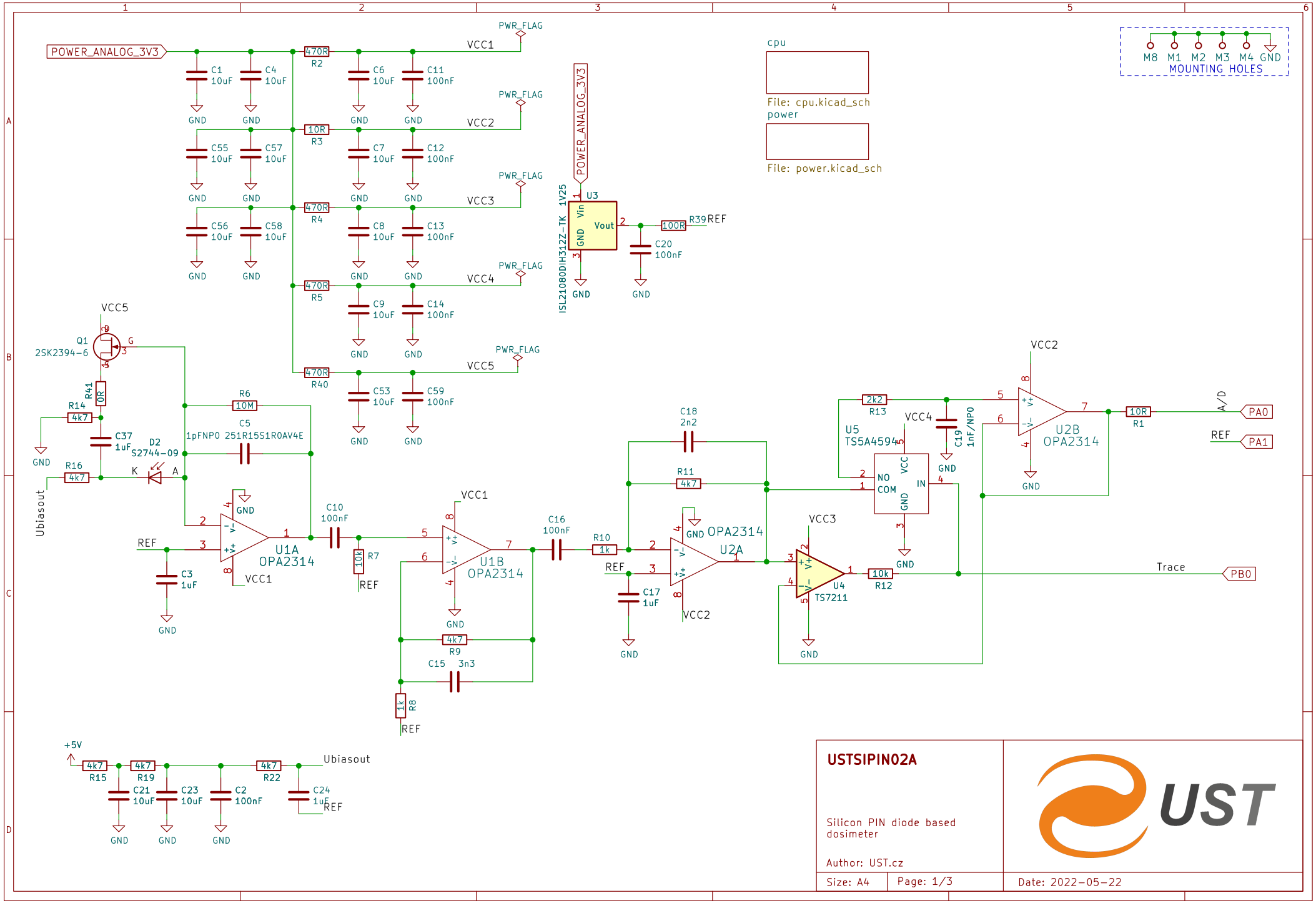
POWER_ANALOG_3V3
PWR_FLAG
VCC1
VCC2
VCC3
VCC4
VCC5
470R R2
10R R3
470R R4
470R R5
470R R40
C1 10uF
C4 10uF
C6 10uF
C11 100nF
C55 10uF
C57 10uF
C7 10uF
C12 100nF
C56 10uF
C58 10uF
C8 10uF
C13 100nF
C9 10uF
C14 100nF
C53 10uF
C59 100nF
GND
U3
ISL21080DIH312Z-TK 1V25
Vin
Vout
R39 100R
REF
C20 100nF
cpu
File: cpu.kicad_sch
power
File: power.kicad_sch
M8 M1 M2 M3 M4 GND
MOUNTING HOLES
Q1
2SK2394-6
G
R41 0R
R14 4k7
C37 1uF
R16 4k7
D2
S2744-09
K A
Ubiasout
R6 10M
C5 1pFNP0 251R15S1R0AV4E
U1A
OPA2314
C3 1uF
C10 100nF
R7 10k
U1B
OPA2314
R9 4k7
C15 3n3
R8 1k
C16 100nF
R10 1k
C17 1uF
C18 2n2
R11 4k7
U2A
OPA2314
U5
TS5A4594
NO
COM
VCC
IN
R13 2k2
C19 1nF/NP0
U4
TS7211
R12 10k
U2B
OPA2314
R1 10R
A/D
PA0
PA1
Trace
PB0
+5V
R15 4k7
R19 4k7
R22 4k7
C21 10uF
C23 10uF
C2 100nF
C24 1uF
USTSIPIN02A
Silicon PIN diode based dosimeter
Author: UST.cz
Size: A4
Page: 1/3
Date: 2022-05-22
UST

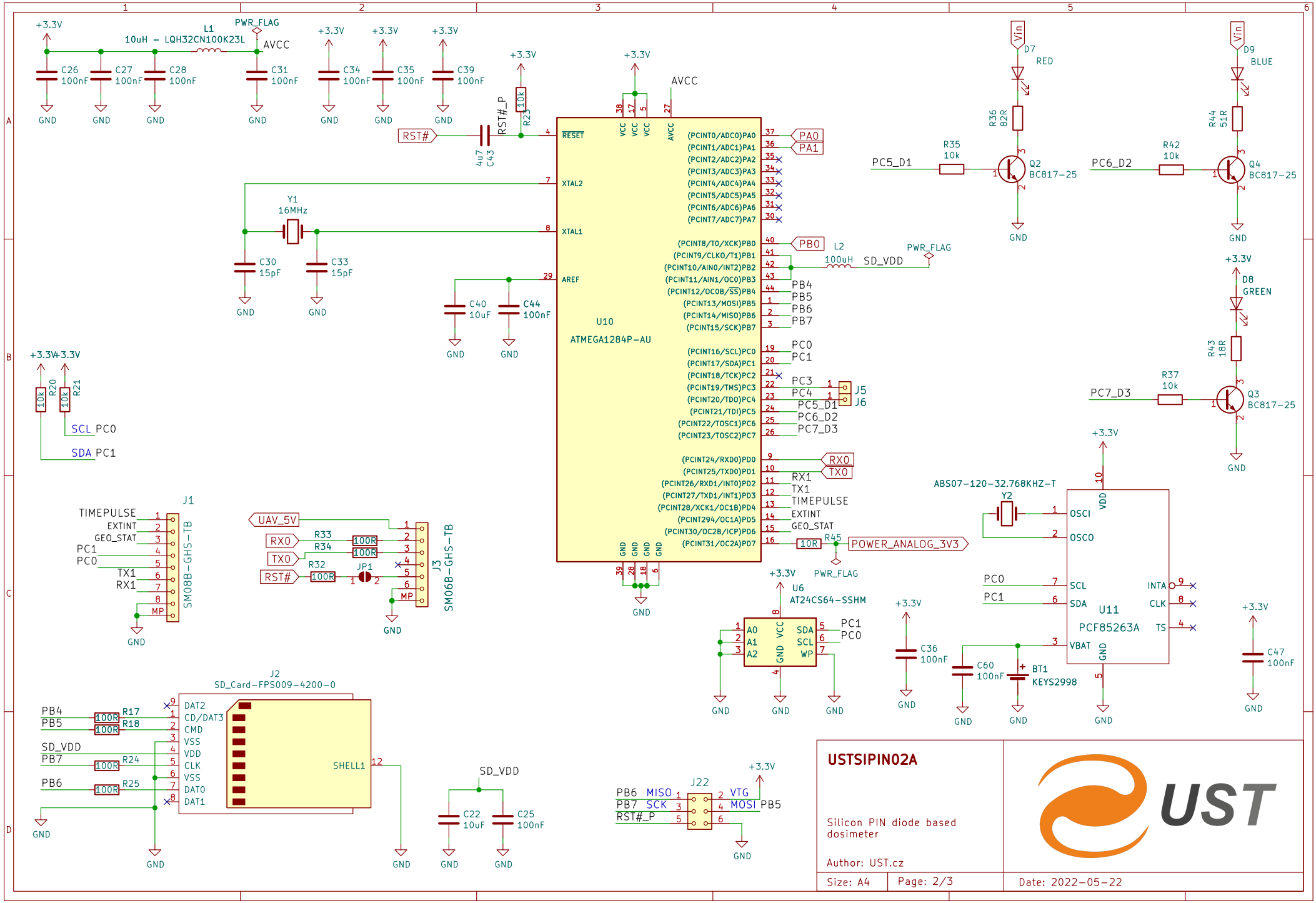

USTSIPIN02A

Silicon PIN diode based dosimeter

Author: UST.cz

Size: A4	Page: 2/3	Date: 2022-05-22

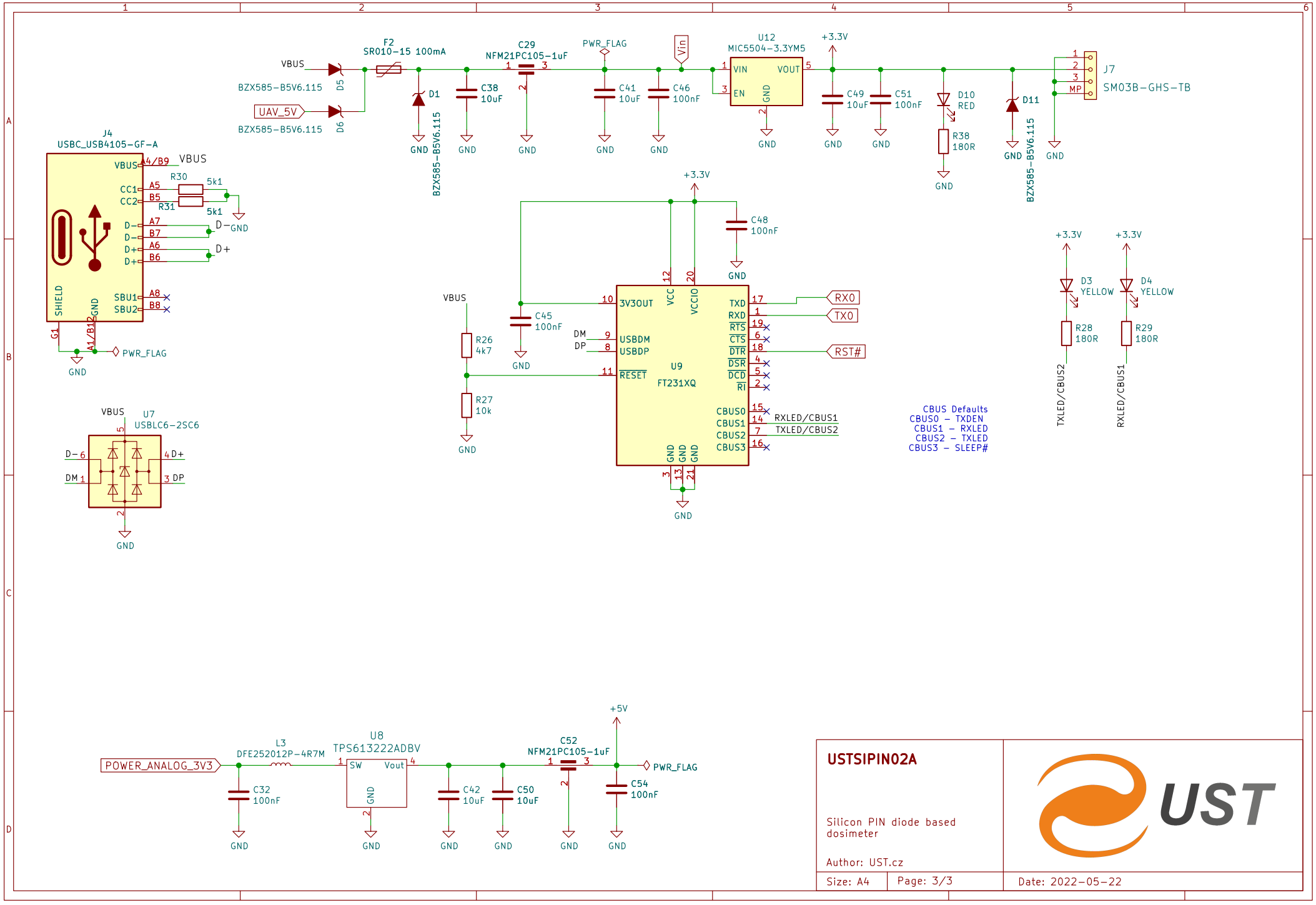

USTSIPIN02A

Silicon PIN diode based dosimeter

Author: UST.cz

Size: A4	Page: 3/3	Date: 2022-05-22