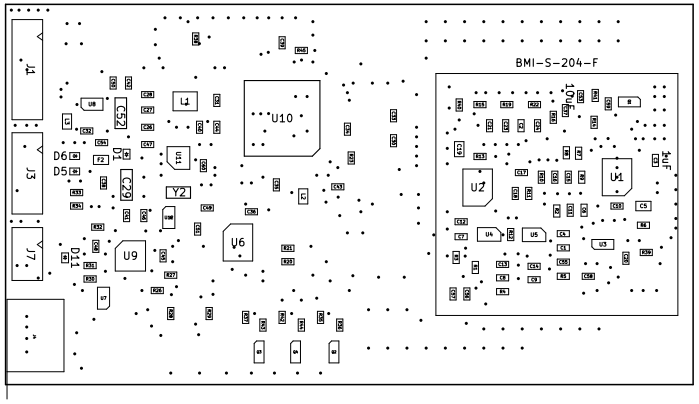

USTSIPIN02A

Silicon PIN dosimeter, spectrometer
info@ust.cz

Author: UST.cz

Size: A4	Page: 1/1	Date: %d. %m. %Y