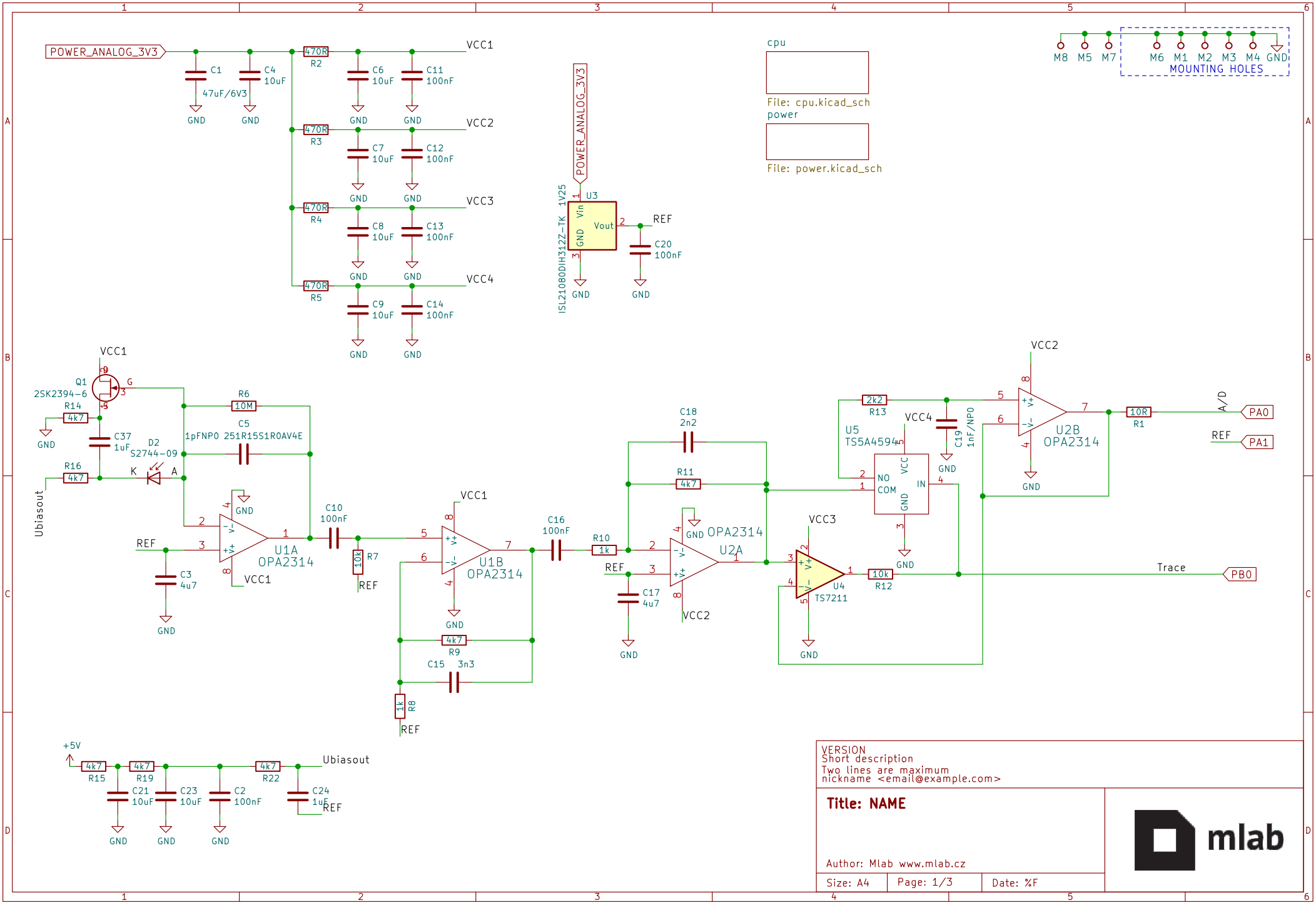
POWER_ANALOG_3V3
C1 47uF/6V3
C4 10uF
470R R2
470R R3
470R R4
470R R5
VCC1
VCC2
VCC3
VCC4
C6 10uF
C11 100nF
C7 10uF
C12 100nF
C8 10uF
C13 100nF
C9 10uF
C14 100nF
GND
POWER_ANALOG_3V3
U3
ISL21080DIH312Z-TK 1V25
Vin
Vout
REF
C20 100nF
cpu
File: cpu.kicad_sch
power
File: power.kicad_sch
M8 M5 M7 M6 M1 M2 M3 M4 GND
MOUNTING HOLES
Q1 2SK2394-6
R14 4k7
C37 1uF
D2 S2744-09
R16 4k7
Ubiasout
R6 10M
C5 1pFNP0 251R15S1R0AV4E
U1A OPA2314
C3 4u7
C10 100nF
R7 10k
U1B OPA2314
R9 4k7
C15 3n3
R8 1k
C16 100nF
R10 1k
C18 2n2
R11 4k7
U2A OPA2314
C17 4u7
U5 TS5A4594
NO COM VCC GND IN
R13 2k2
C19 1nF/NP0
U4 TS7211
R12 10k
U2B OPA2314
R1 10R
A/D
PA0
PA1
Trace
PB0
+5V
R15 4k7
R19 4k7
R22 4k7
C21 10uF
C23 10uF
C2 100nF
C24 1uF
VERSION
Short description
Two lines are maximum
nickname <email@example.com>
Title: NAME
Author: Mlab www.mlab.cz
Size: A4
Page: 1/3
Date: %F
mlab

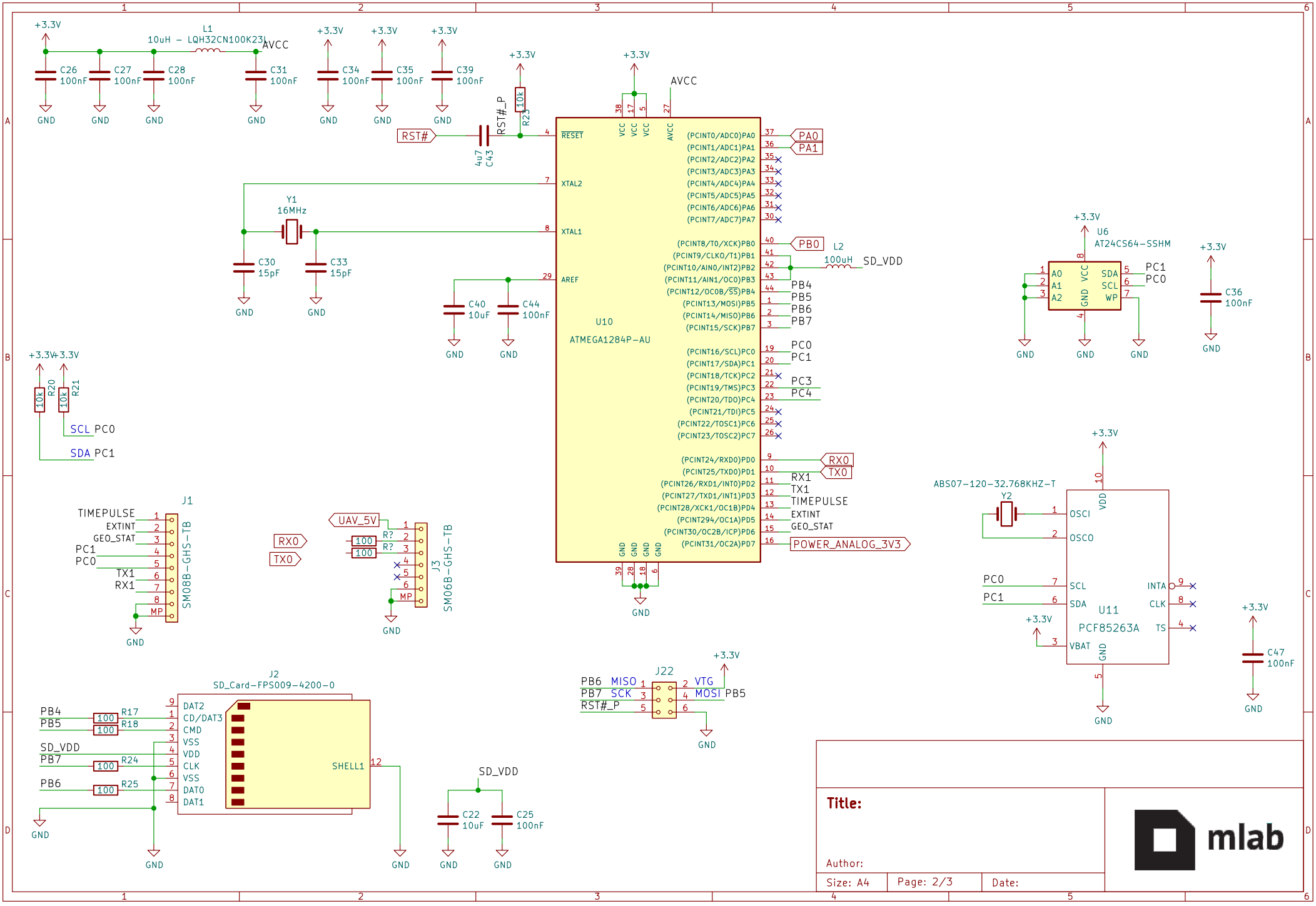
+3.3V
L1
10uH – LQH32CN100K23L
AVCC
C26 100nF
C27 100nF
C28 100nF
C31 100nF
C34 100nF
C35 100nF
C39 100nF
GND
RST#
RST#_P
R23 10k
4u7 C43
RESET
VCC
AVCC
XTAL2
XTAL1
AREF
Y1 16MHz
C30 15pF
C33 15pF
C40 10uF
C44 100nF
U10
ATMEGA1284P–AU
(PCINT0/ADC0)PA0
(PCINT1/ADC1)PA1
(PCINT2/ADC2)PA2
(PCINT3/ADC3)PA3
(PCINT4/ADC4)PA4
(PCINT5/ADC5)PA5
(PCINT6/ADC6)PA6
(PCINT7/ADC7)PA7
(PCINT8/T0/XCK)PB0
(PCINT9/CLKO/T1)PB1
(PCINT10/AIN0/INT2)PB2
(PCINT11/AIN1/OC0)PB3
(PCINT12/OC0B/SS)PB4
(PCINT13/MOSI)PB5
(PCINT14/MISO)PB6
(PCINT15/SCK)PB7
(PCINT16/SCL)PC0
(PCINT17/SDA)PC1
(PCINT18/TCK)PC2
(PCINT19/TMS)PC3
(PCINT20/TDO)PC4
(PCINT21/TDI)PC5
(PCINT22/TOSC1)PC6
(PCINT23/TOSC2)PC7
(PCINT24/RXD0)PD0
(PCINT25/TXD0)PD1
(PCINT26/RXD1/INT0)PD2
(PCINT27/TXD1/INT1)PD3
(PCINT28/XCK1/OC1B)PD4
(PCINT294/OC1A)PD5
(PCINT30/OC2B/ICP)PD6
(PCINT31/OC2A)PD7
PA0
PA1
PB0
L2
100uH
SD_VDD
PB4
PB5
PB6
PB7
PC0
PC1
PC3
PC4
RX0
TX0
RX1
TX1
TIMEPULSE
EXTINT
GEO_STAT
POWER_ANALOG_3V3
U6
AT24CS64–SSHM
A0
A1
A2
SDA
SCL
WP
C36 100nF
R20 10k
R21 10k
SCL PC0
SDA PC1
J1
SM08B–GHS–TB
MP
UAV_5V
R? 100
J3
SM06B–GHS–TB
ABS07–120–32.768KHZ–T
Y2
OSCI
OSCO
VDD
INTA
CLK
TS
VBAT
U11
PCF85263A
C47 100nF
J22
PB6 MISO
PB7 SCK
RST#_P
VTG
MOSI PB5
J2
SD_Card–FPS009–4200–0
DAT2
CD/DAT3
CMD
VSS
VDD
CLK
VSS
DAT0
DAT1
SHELL1
R17 100
R18 100
R24 100
R25 100
C22 10uF
C25 100nF
Title:
Author:
Size: A4
Page: 2/3
Date:
mlab

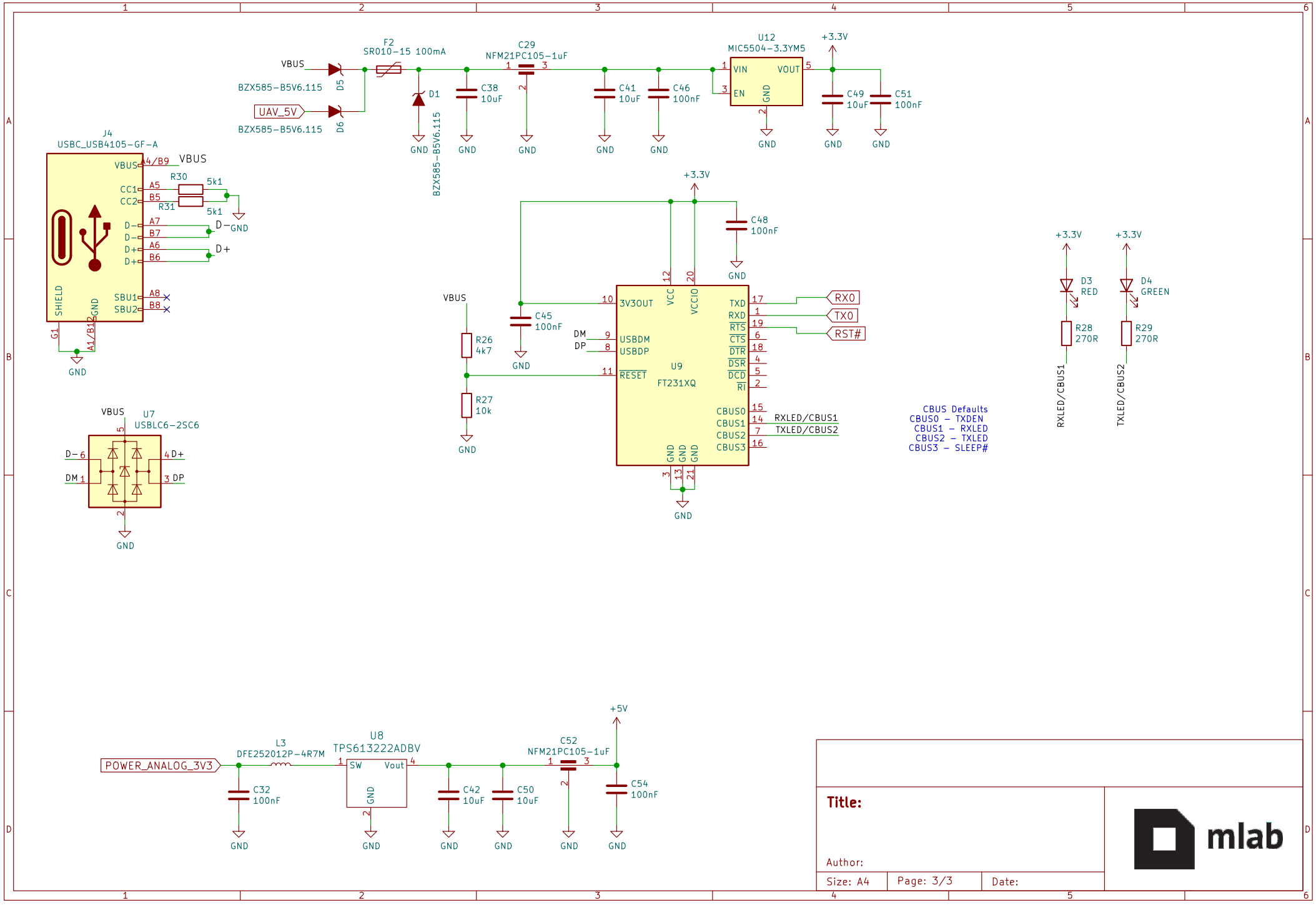
F2
SR010-15 100mA
VBUS
BZX585-B5V6.115
D5
UAV_5V
BZX585-B5V6.115
D6
D1
BZX585-B5V6.115
GND
C38
10uF
C29
NFM21PC105-1uF
C41
10uF
C46
100nF
U12
MIC5504-3.3YM5
VIN
VOUT
EN
GND
+3.3V
C49
10uF
C51
100nF
J4
USBC_USB4105-GF-A
VBUS
A4/B9
CC1
A5
CC2
B5
R30
5k1
R31
5k1
D-
A7
B7
D+
A6
B6
SHIELD
GND
SBU1
A8
SBU2
B8
G1
A1/B12
D-GND
D+
U7
USBLC6-2SC6
D-
DM
D+
DP
C48
100nF
C45
100nF
R26
4k7
R27
10k
3V3OUT
VCC
VCCIO
USBDM
USBDP
RESET
U9
FT231XQ
TXD
RXD
RTS
CTS
DTR
DSR
DCD
RI
CBUS0
CBUS1
CBUS2
CBUS3
RXLED/CBUS1
TXLED/CBUS2
RX0
TX0
RST#
CBUS Defaults
CBUS0 - TXDEN
CBUS1 - RXLED
CBUS2 - TXLED
CBUS3 - SLEEP#
D3
RED
D4
GREEN
R28
270R
R29
270R
POWER_ANALOG_3V3
L3
DFE252012P-4R7M
U8
TPS613222ADBV
SW
Vout
C32
100nF
C42
10uF
C50
10uF
C52
NFM21PC105-1uF
+5V
C54
100nF
Title:
Author:
Size: A4
Page: 3/3
Date:
mlab