Two times cascaded:
15 kHz band pass, using a
modified Deliyannis filter
(Texas Instruments, SLOA093)

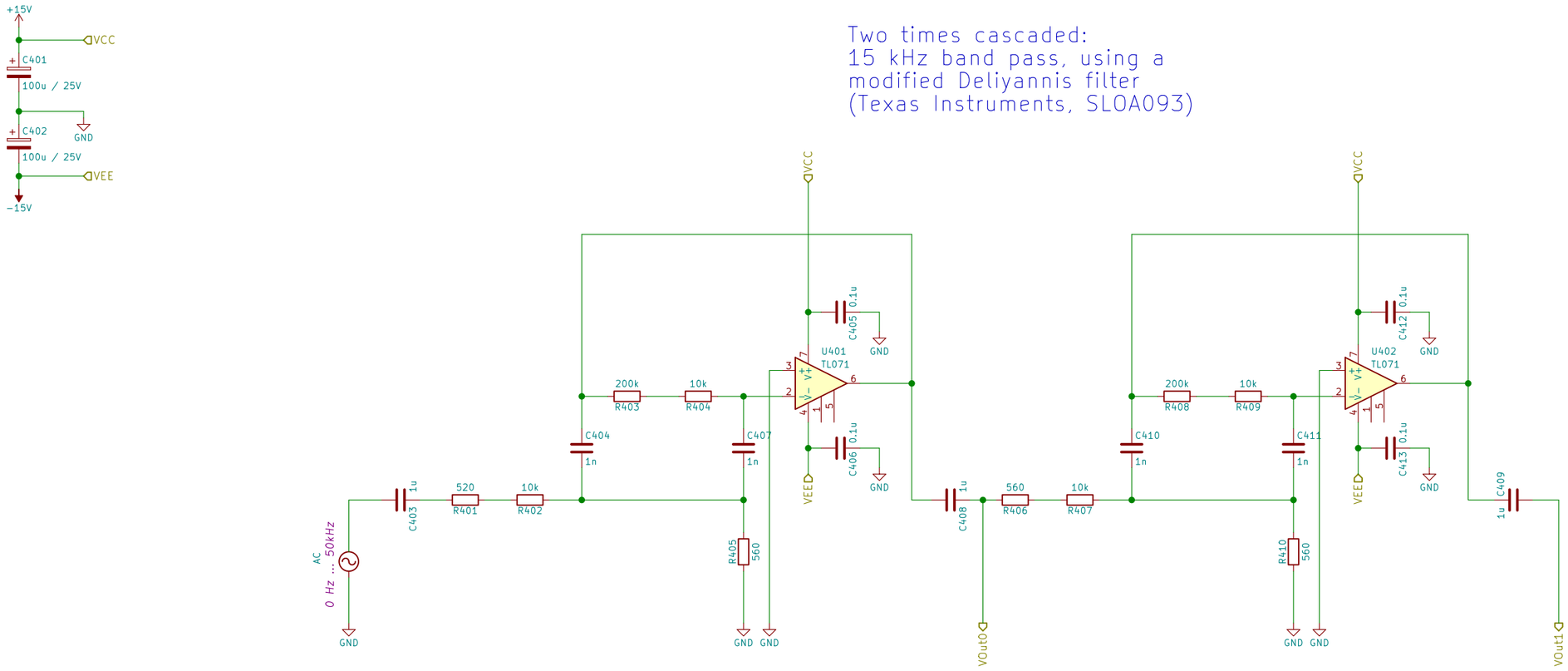

VOut0

Spectrum analyzer output, 0 Hz ... 50 kHz.

Marker is at 15 kHz.

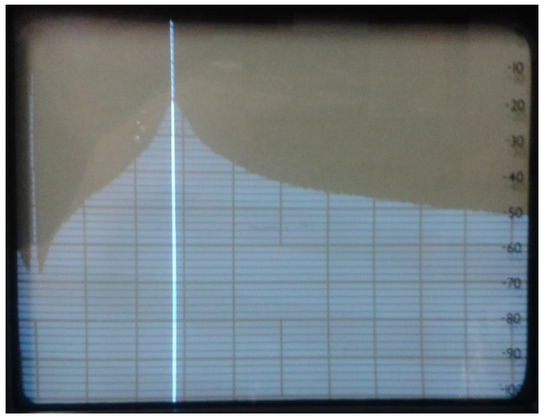

VOut1

Spectrum analyzer output, 0 Hz ... 50 kHz.

Marker is at −6dB point.

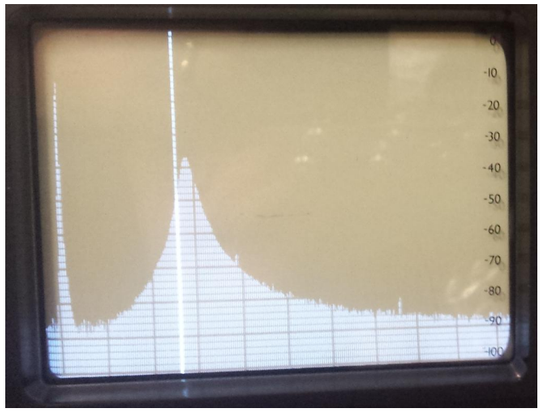

Components used do vary, so
in this experiment the filter is not
at it's best performance.
Peak is at 14.4 kHz, −6dB points
are at 13.2 kHz and 15.8 kHz.
Total bandwidth is 2.6 kHz.

This result is satisfactory as we
can expect better performance
when we use better components.

Also, there's room for optimization
with the resistors−in−series combinations.

Sheet: /test_frequecy−transfer_filter_15000_01/
File: test_frequecy−transfer_filter_15000_01.sch

Title: Frequency transfer, band pass filter, 15000 Hz

Size: A3	Date: 2017−05−01	Rev:
KiCad E.D.A. kicad 4.0.6−e0−634953ubuntu14.04.1		Id: 4/4