CS-351: Complier Construction

(Spring 2026)

Lecture 8

Adnan Rashid

Email: adnan.rashid@seecs.edu.pk

Web: https://adrashid.github.io/

Recap

- Theory of Automata and FL: A Quick Review
  - Regular Expressions
  - Finite Automata

Outline

- Theory of Automata and FL: A Quick Review
- Designing a Handwritten Scanner
- Technical Issues in Design

Lecture's Content

Compiler: Principles, Techniques and Tools (2nd Edition)

by

Alfred V. Aho et al.

Sections 3.1, 3.2 and 3.3

(Pages 109 and 115 onwards)

Recap: Regular Expressions and Finite Automata

- The lexical grammar (structure) of most programming languages can be specified with regular expressions
  - Regular Expressions are a formal way to specify patterns i.e., Tokens Specification
- Tokens can be recognized by a Deterministic Finite Automaton (DFA)
  - Can be either table-driven or built by hand based on lexical grammar

Recap: Regular Expressions

- Defined over some alphabet Σ
- For programming languages, alphabet is usually ASCII or Unicode
- If RE is a regular expression, L(RE) is the language (set of strings) generated by RE

RE	L(RE)	Notes
a	{ a }	Singleton set, for each a in Σ
ε	{ ε }	Empty string
φ	{ }	Empty language

Recap: Regular Expressions: Basic Operations

RE	L(RE)	Notes
rs	L(r)L(s)	Concatenation
r|s	L(r) U L(s)	Combination (union)
r*	L(r)*	0 or more occurrences (Kleene closure)

- Precedence: *(highest), concatenation, |(lowest)
- Parentheses can be used to group REs as needed

Regular Expressions: Common Abbreviations

- The basic operations generate all possible regular expressions, but there are common abbreviations used for convenience

Abbr.	Meaning	Notes
r+	(rr*)	1 or more occurrences
r?	(r | ε)	0 or 1 occurrence
[a-z]	(a|b|…|z)	1 character in given range
[abxyz]	(a|b|x|y|z)	1 of the given characters

Regular Expressions: Examples

RE	Meaning
+	single + character
!	single ! character
=	single = character
!=	2 character sequence
<=	2 character sequence
xyzzy	5 character sequence

TODO: Find Meanings?

RE	
[abc]+	
[abc]*	
[0-9]+	Positive Integers
[1-9][0-9]*	Integers without leading zero
[a-zA-Z][a-zA-Z0-9_]*	Identifiers

Regular Definition

- Many systems allow abbreviations to make writing and reading definitions or specifications easier

Name ::= RE

- Restriction: abbreviations may not be circular (recursive) either directly or indirectly (else would be non-regular)
- Example:

```
digit ::= [0-9]
digits ::= digit+
number ::= digits(.digits)?
           ([eE](+|-)?digits)?
```

Recognizing REs using DFA

- We would like to use DFA for speed (no backtracking)
- Conversion from Regular Expressions to NFA
  - McNaughton Yamada Thompson (MNYT) Algorithm
- Conversion from NFA to DFA is easy
  - Using the Subset Construction method

DFA for a Hand-written Scanner

- Idea: show a hand-written DFA for some typical programming language constructs
  - Then use it to construct a hand-written scanner
- Setting: The scanner is called whenever the parser needs a new token
  - Scanner stores current position in input
  - Starting there, use a DFA to recognize the longest possible input sequence that makes up a token and return that token

DFA for a Hand-written Scanner

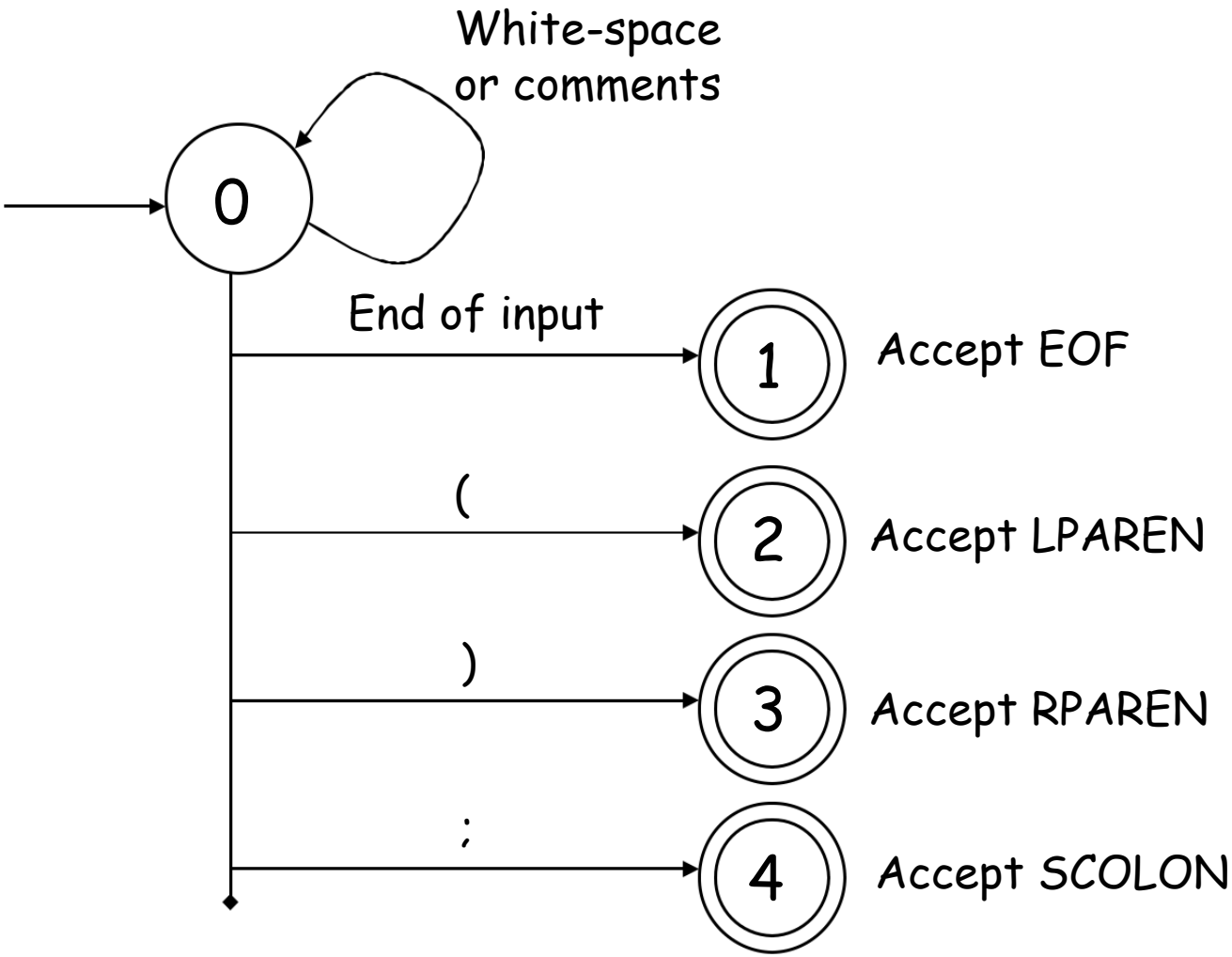

DFA for a Hand-written Scanner

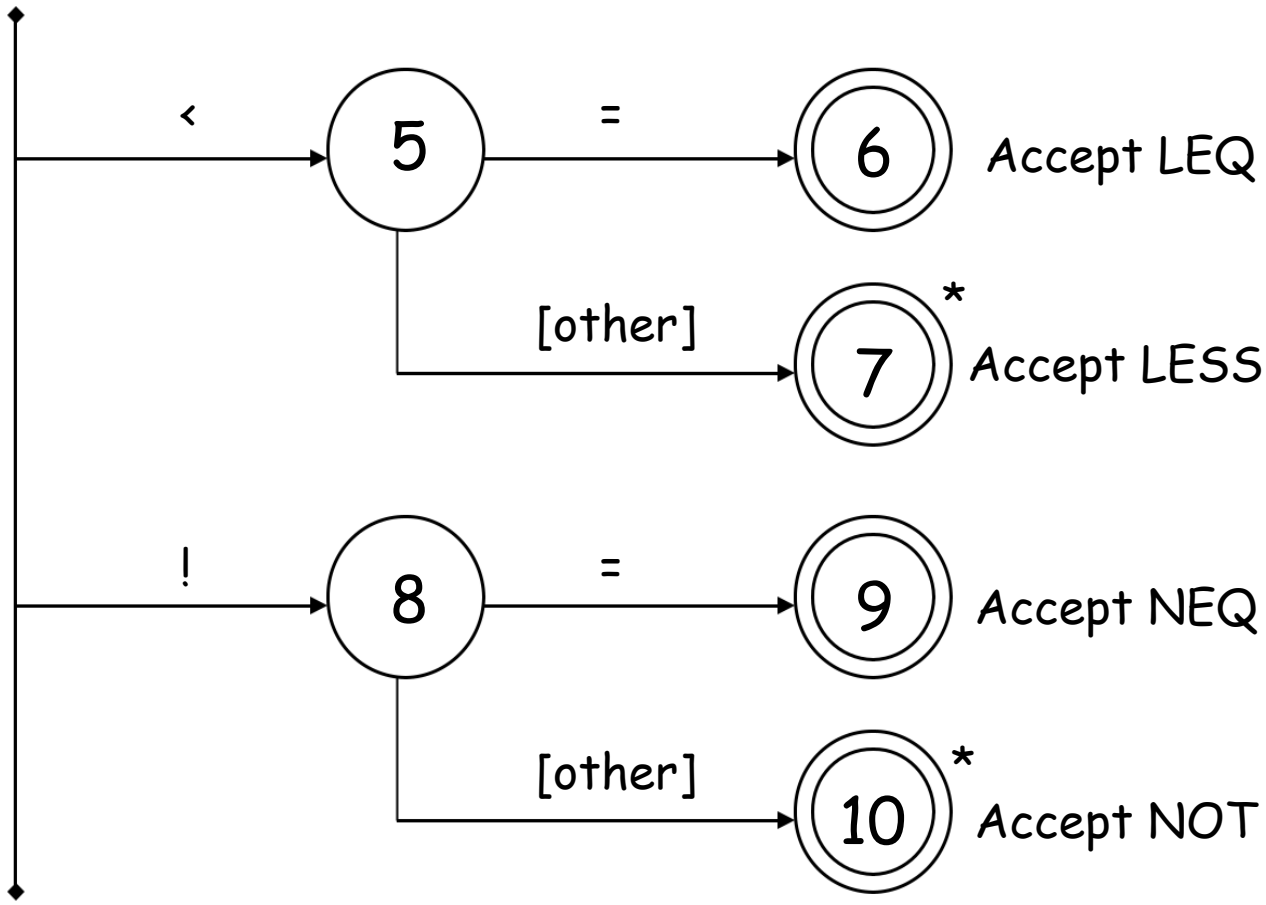

* We must retract the input one position (unread one character)

DFA for a Hand-written Scanner

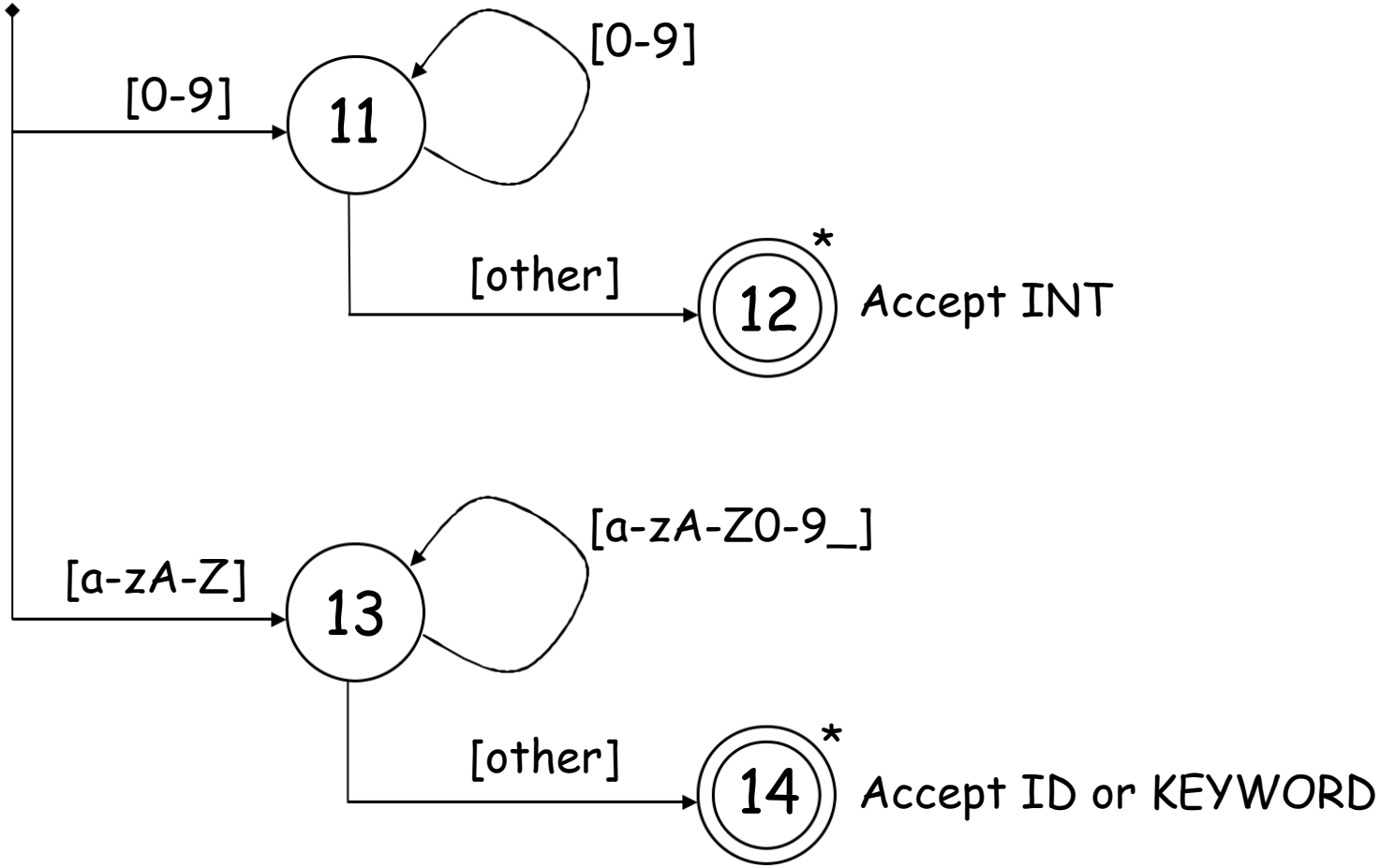

Summary: Hand-written Scanner

Thank you!