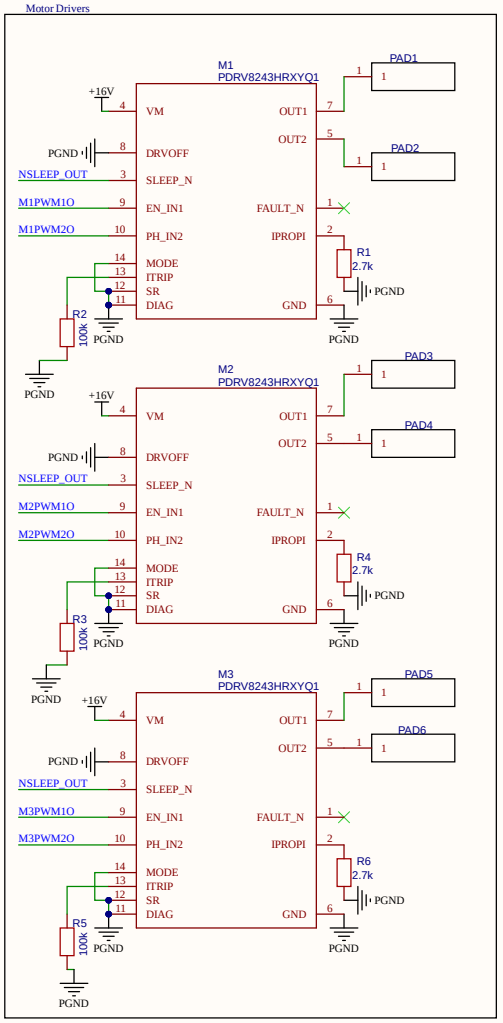
Motor Drivers
M1
PDRV8243HRXYQ1
M2
PDRV8243HRXYQ1
M3
PDRV8243HRXYQ1
VM
DRVOFF
SLEEP_N
EN_IN1
PH_IN2
MODE
ITRIP
SR
DIAG
OUT1
OUT2
FAULT_N
IPROPI
GND
+16V
PGND
NSLEEP_OUT
M1PWM1O
M1PWM2O
M2PWM1O
M2PWM2O
M3PWM1O
M3PWM2O
PAD1
PAD2
PAD3
PAD4
PAD5
PAD6
R1 2.7k
R2 100k
R3 100k
R4 2.7k
R5 100k
R6 2.7k

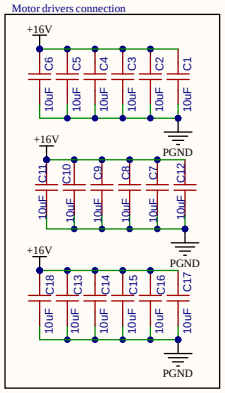
Motor drivers connection
+16V
C1 10uF
C2 10uF
C3 10uF
C4 10uF
C5 10uF
C6 10uF
C7 10uF
C8 10uF
C9 10uF
C10 10uF
C11 10uF
C12 10uF
C13 10uF
C14 10uF
C15 10uF
C16 10uF
C17 10uF
C18 10uF
PGND

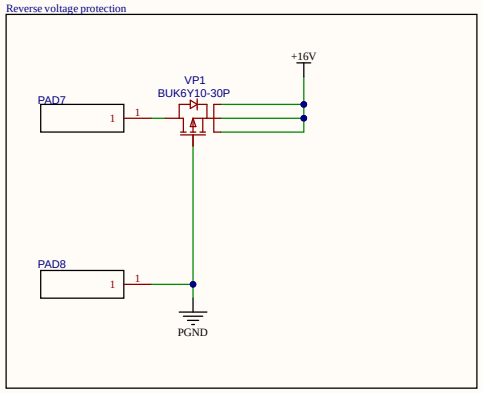
Reverse voltage protection
+16V
VP1
BUK6Y10-30P
PAD7
PAD8
PGND

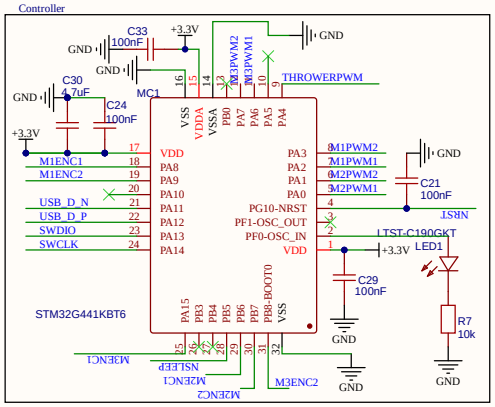
Controller
MC1
STM32G441KBT6
C33 100nF
C30 4.7uF
C24 100nF
C21 100nF
C29 100nF
C22 4.7uF
R7 10k
LTST-C190GKT
LED1
THROWERPWM
M1ENC1
M1ENC2
USB_D_N
USB_D_P
SWDIO
SWCLK
M1PWM2
M1PWM1
M2PWM2
M2PWM1
NRST
M3ENC1
M3ENC2
NSLEEP
+3.3V
GND

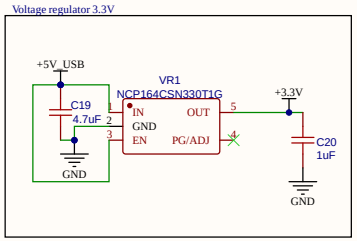
Voltage regulator 3.3V
+5V_USB
VR1
NCP164CSN330T1G
IN
OUT
GND
EN
PG/ADJ
C19 4.7uF
C20 1uF
+3.3V
GND

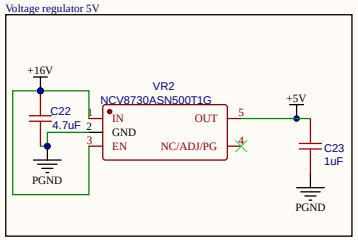
Voltage regulator 5V
+16V
VR2
NCV8730ASN500T1G
IN
OUT
GND
EN
NC/ADJ/PG
C22 4.7uF
C23 1uF
+5V
PGND

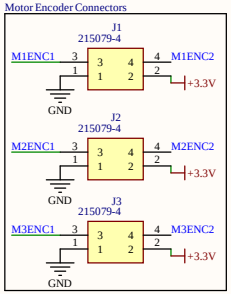
Motor Encoder Connectors
J1
215079-4
J2
215079-4
J3
215079-4
M1ENC1
M1ENC2
M2ENC1
M2ENC2
M3ENC1
M3ENC2
+3.3V
GND

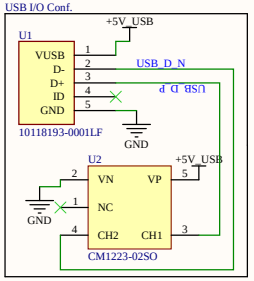
USB I/O Conf.
U1
VUSB
D-
D+
ID
GND
10118193-0001LF
+5V_USB
USB_D_N
USB_D_P
U2
VN
VP
NC
CH2
CH1
CM1223-02SO
GND

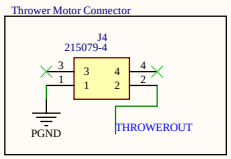
Thrower Motor Connector
J4
215079-4
THROWEROUT
PGND

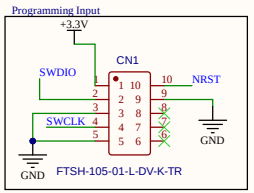
Programming Input
+3.3V
CN1
SWDIO
SWCLK
NRST
FTSH-105-01-L-DV-K-TR
GND

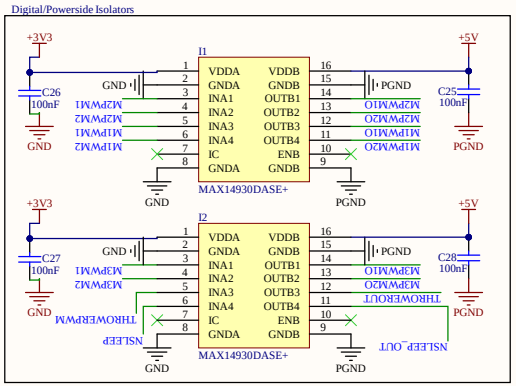
Digital/Powerside Isolators
I1
I2
MAX14930DASE+
VDDA
GNDA
INA1
INA2
INA3
INA4
IC
VDDB
GNDB
OUTB1
OUTB2
OUTB3
OUTB4
ENB
+3V3
+5V
C26 100nF
C25 100nF
C27 100nF
C28 100nF
M1PWM1O
M1PWM2O
M2PWM1O
M2PWM2O
M3PWM1O
M3PWM2O
THROWERPWM
THROWEROUT
NSLEEP
NSLEEP_OUT
GND
PGND