# Vidya Pratishtha's

# Kamalnayan Bajaj Institute Of Engineering And Technology

**Department of Mechanical Engineering**

**Third Year Mechanical- Session -2023-24**

## Project Report (Internship)

## '3D Printed Model Manual Shearing Machine'

**Vidya Pratishthan's**

**Kamalnayan Bajaj Institute of Engineering and Technology, Baramati**

**Department of Mechanical Engineering**

## CERTIFICATE

This is to certify that **Mr. Utkarsh Santosh Jadhav** have successfully completed the Internship Stage-I entitled "3D Printing Technologies at Bharat Forge COE" under our supervision, in the partial fulfilment of Term Work (TW) assigned by Bachelor of Mechanical Engineering of S.P.P. University, Pune.

**Date:**

**Place:** VPKBIET Baramati.

**Signature of Student** **Signature of Guide**

**External Examiner** **Head of Department**

**Dean IIIC**

**Principal**
**VPKBIET Baramati**

## ACKNOWLEDGEMENT

The study of "**Exploring 3D Printing Technologies at Bharat Forge COE**" was a source of immense knowledge to me. I would like to express my sincere gratitude to my guide **Mr. H. Borate** and **Mr. V. Bhagwat** (3D Printer in Bharat Forge COE) for his guidance and valuable support throughout this study. I wish to express my sincere thanks to all staff members of my college for the knowledge imparted during this course. I would like to thank Head of Department, ***Dr. S. M. Bhosle*** and our honorable principal ***Dr. R. S. Bichkar*** for their cooperation availing required facility.

Last but not least, I would like to thank all of my friends and family members for their support and co-operation.

**Name and Signature of Student**

## ABSTRACT

With the revolutionizing of intelligent manufacturing, 3D printing has made a major impact on many fields of manufacturing industries. The ability to work without much intervention is the most advantageous factor in the additive manufacturing process. Additive manufacturing is a process of making a 3-Dimensional solid object of virtually any shape from a digital model.3D printing is achieved using an additive process, where successive layers of material are laid down in different shapes. 3D printing is considered distinct from traditional machining techniques, which mostly rely on the removal of material by methods such as cutting or drilling (subtractive processes). A material printer usually performs 3D printing processes using digital technology. Since the start of the twenty-first century, there has been a large growth in the sales of these machines, and their price has dropped substantially. This aims at enabling power resume option, auto bed-levelling, remote monitor, and control feature using IoT to manufacture high temperature, good impact light and tensile strength materials. Thus, this machine serves the purpose of making allow-cost 3D printer acting as a plug and play device (smart machine).

The technology is used for both prototyping and distributed manufacturing jewellery footwear, industrial design ,architecture, engineering and construction (AEC) automotive, aerospace, dental and medical industries, education, geographic information systems, civil engineering, and many other fields..

# CONTENTS

**Chapter 1. Introduction** ..... 1

1.1 History Of 3d Printing ..... 2
1.2 3D Printing Technology ..... 4
1.3 Concept of Additive Manufacturing ..... 5

**Chapter 2. About Finder** ..... 6

2.1 About Your Finder ..... 6

2.1.1 Views ..... 6
2.1.2 Term ..... 7
2.1.3 Interface Menus ..... 8
2.2 Accessories ..... 10

**Chapter 3. General Principal** ..... 12

3.1 Modelling ..... 12
3.2 printing ..... 12
3.3 Finishing ..... 13

**Chapter 4. Processes** ..... 15

4.1 Extrusion Position ..... 15
4.2 Granular Material Binding ..... 16
4.3 Limitation ..... 17

**Chapter 5. About Software** ..... 18

5.1 Software Acquisition ..... 18
5.2 Exploring View 3d Flash Printer ..... 18
5.2.1 Views ..... 19
5.2.2 Move ..... 19
5.2.3 Rotate ..... 20
5.2.4 Scale ..... 20
5.2.5 Cut ..... 21
5.2.6 Slicing ..... 22
5.2.7 Print ..... 23

**Chapter 6. Which Cad Software Used in Design** ..... 24

**Chapter 7. Maintenance And Solutions** .....25

7.1 Unlogging the extruder..... 25

**Chapter 8. 3D Printing Model About Project**

**(Manual Shearing Machine)**..... **2**6

8.1 Solid Work Model.....26

8.2 Model Developed Stress,Strin,Displacement ..... 27

8.3 Part Convert In STL file..... 30

**Chapter 9**. **Application**..... 31

12.3 Printed Car..... 31

12.4 Budling Construction .....31

12.5 Toyes .....31

**Chapter 10. Conclusion**..... 32

## List of Figure

Figure 1.1.1 – Chuck Hall The Father Of 3D..... 2
Figure 1.2.1 Type Of 3D Printing Technology .....4
Figure 1.3.1 Additive Manufacturing Process Overview..... 5
Figure 2.1.1.1 View 3D Printer .....6
Figure 2.1.3.1 Inter Face Menus..... 8
Figure 2.2.1 Accessories ..... 10
Figure 3.1.1 Modelling in 3d printer .....12
Figure 3.2.1 Printing..... 12
Figure 3.3.1 Finishing .....13
Figure 4.1.1 Extrusion Deposition .....16
Figure 4.2.1 Granular Material..... 17
Figure 5.1.1 Flash Printer support FP..... 18
Figure 5.2.1 Exploring Over View .....18
Figure 5.2.2.1 Move Command..... 19
Figure 5.2.3 Rotate Command ..... 20
Figure 5.2.4.1 Scale Command .....21
Figure 5.2.6 Cut Command In (XYZ) Axis .....21
Figure 5.2.6.2 Slicing In Draft Changes..... 22
Figure 5.2.6.3 Slicing View..... 23
Figure 7.1.1 Unlogging the extruder .....25
Figure 8.2.1 Meshing in (SW)..... 27
Figure 8.2.2 Stress in (SW) .....27
Figure 8.2.3 Strin in (SW).....28
Figure 8.2.4 Displacement in (SW)..... 29
Figure 8.3.1 SLDPRT FILE .....30
Figure 8.3.2 STL FILE.....30

# INTRODUCTION

A 3D printer uses a virtual, mathematical model to construct a physical artifact. For example, a designer in the process of creating a new laptop can use a software package to create a three-dimensional model of her creation, that can be manipulated and viewed on the computer screen. The 3D printer can take the symbolic representation of this new object and use it to build a full-size, physical model that can be held and manipulated, helping the designer to better understand the strengths and limitations of her design.

An architect can turn the plans for a building into a three-dimensional model and then "print" a scale model to help him understand and communicate his design. An archaeologist can print duplicates of an important, but fragile, tool so that her students can hold it in their hands and better understand how it might have been used by an ancient civilization. A biochemist can print accurate models of DNA molecules, enlarged by many orders of magnitude, to help students and researchers better understand nature by engaging their hands as well as their eyes in comprehending the geometry of nature. And a student of the arts can create a unique object that would be difficult or impossible to build by hand.

We will not here consider other types of computer-controlled manufacturing, such subtractive machines, which work by cutting away from a larger piece of material in order to build a part. Additive rapid prototyping machines were first introduced twenty years ago, when 3D Systems introduced the Stereo lithography, or SLA machine. While these machines were remarkable for their ability to create complex parts, they were large, expense, and difficult to operate.

# CHAPTER-1

## INTRODUCTION

**1.1 History Of 3d Printing :-** Early AM equipment and materials were developed in the 1980s.In 1984, Chuck Hull of 3D Systems Corporation, invented a process known as stereo lithography, in which layers are added by curing photopolymers with UV lasers. Hull defined the process as a "system for generating three-dimensional objects by creating a cross-sectional pattern of the object to be formed. He also developed the STL (Stereo Lithography) file format widely accepted by 3D printing software as well as the digital slicing and infill strategies common to many processes today. The term 3D printing originally referred to a process employing standard and custom inkjet print heads. The technology used by most 3D printers to date especially hobbyist and consumer-oriented models-is fused deposition modelling, a special application of plastic extrusion

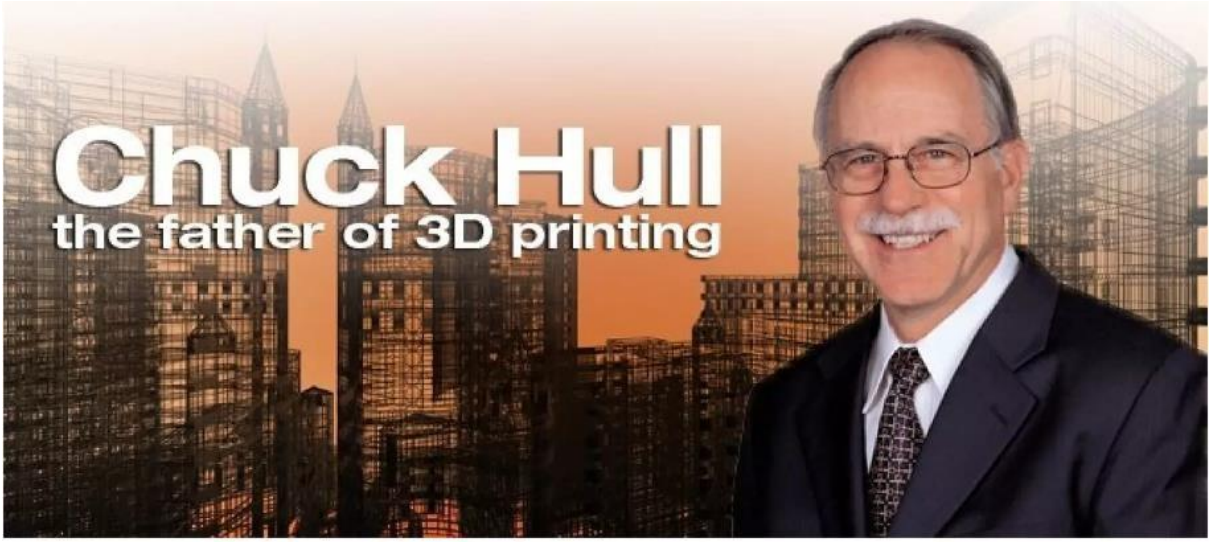


Figure 1.1.1 – Chuck Hall The Father Of 3D Printer

AM processes for metal sintering or melting usually went by their own individual names in the 1980s and 1990s. Nearly all metalworking production at the time was by casting, fabrication, stamping, and machining; even though plenty of

moving through a 3D work envelope transforming a mass of raw material into a desired shape layer by layer was associated by most people only with processes that removed metal (rather than adding it), such as CNC milling, CNC EDM, and many others. The umbrella term additive manufacturing gained wider currency inthedecadeofthe2000.as the various additive processes automation was applied to those technologies (such as by robot welding and CNC), the idea of a tool or head matured and it became clear that soon metat removal would no longer be the sole occupant of the aforementioned paradigm. It was during this decade that the term subtractive manufacturing appeared for the large family of machining processes with metal removal as their common theme. However, at the time, the term 3D printing still referred only to the polymer technologies in most minds, and the term AM was likelier to be used in metalworking contexts than among polymer/inkjet/stereo lithography enthusiasts.

By the carly 2010s, the terms 3D printing and additive manufacturing developed senses in which they were synonymous umbrella terms for all AM technologies. Although this was a departure from their earlier technically narrower senses, it reflects the simple fact that the technologies all share the common theme of sequential-layer material addition/joining throughout a 3D work envelope under automated control. (Other terms that have appeared, which are usually used as AM synonyms have been desk top manufacturing, rapid manufacturing [as the logical production- level successor to rapid prototyping], and on-demand manufacturing [which echoes on-demand printing in the 2D sense of printing].) The 2010s were the first decade in which metal parts such as engine brackets and large nuts would be grown (either before or instead of machining) in job production rather than obligatory being machined from bar stock or plate. The term subtractive has not replaced the term machining, instead complementing it when a term that covers any removal method is needed.

**1.2 3D Printing Technology :- Process**: 3D printing typically involves these basic steps:

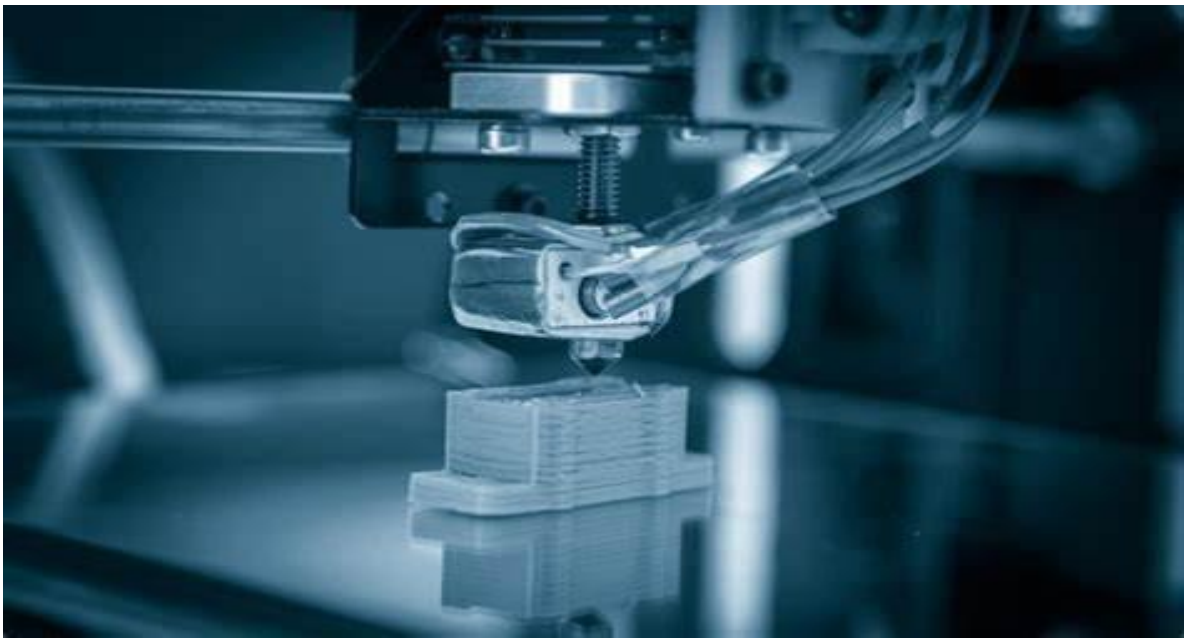

Figure 1.2.1 Type Of 3D Printing Technology

**Process:**

Design a digital model.

Slice it into layers.

Print the layers.

**Types of 3D Printing Technologies:**

FDM: Heats and extrudes thermoplastic filament.

SLA: Uses UV laser to solidify liquid resin.

SLS: Laser fuses powdered materials.

DLP: Cures liquid resin with a digital light projector.

SLM/EBM: Melts and fuses metal powder.

**Materials:**

Plastics, metals, ceramics, composites, and biological materials.

## 1.3 Concept of Additive Manufacturing :-

Additive manufacturing (AM) is the industrial production name for 3D printing, a computer controlled process that creates three dimensional objects by

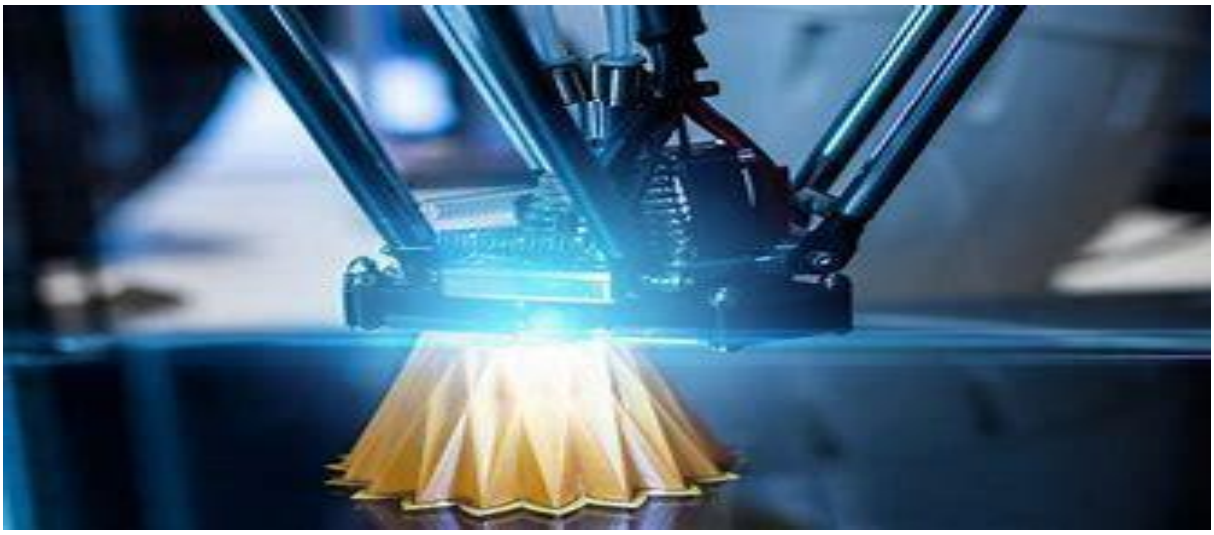

Figure 1.3.1 Additive Manufacturing Process Overview

depositing materials, usually in layers .This revolutionary method for creating 3D models with the use of inkjet technology saves time and cost by eliminating the need to design print and glue together separate model parts. Creating a complete model in a single process is possible using 3D printing. The basic principles include material cartridges, the flexibility of output, and translation of code into the visible pattern. JD Printers are machines that produce physical 3D models from digital data by printing layer by layer. It can make physical models of objects designed with a CAD program or scanned with a 3D Scanner. It is used in a variety of industries. Inmost the industries such as manufacturing aerospace, automobile, jewellery, footwear industrial design, architecture ,engineering and construction, dental and medical industries, education and consumer products ,additive manufacturing is used for prototyping of various models for research as well as demonstrations of end products. Additive manufacturing, or 3D printing, builds objects layer by layer from digital designs, unlike traditional subtractive methods. It offers precise control over geometry and properties, starting with a

digital model created in CAD software, which is then sliced into layers. The 3D printer interprets these layers and deposits or solidifies material to form the object. This method allows for complex designs, reduces waste, and is cost-effective for small runs or custom items.

# CHAPTER-2

## ABOUT FINDER

### 2.1 About Your Finder

### 2.1.1 Views :-

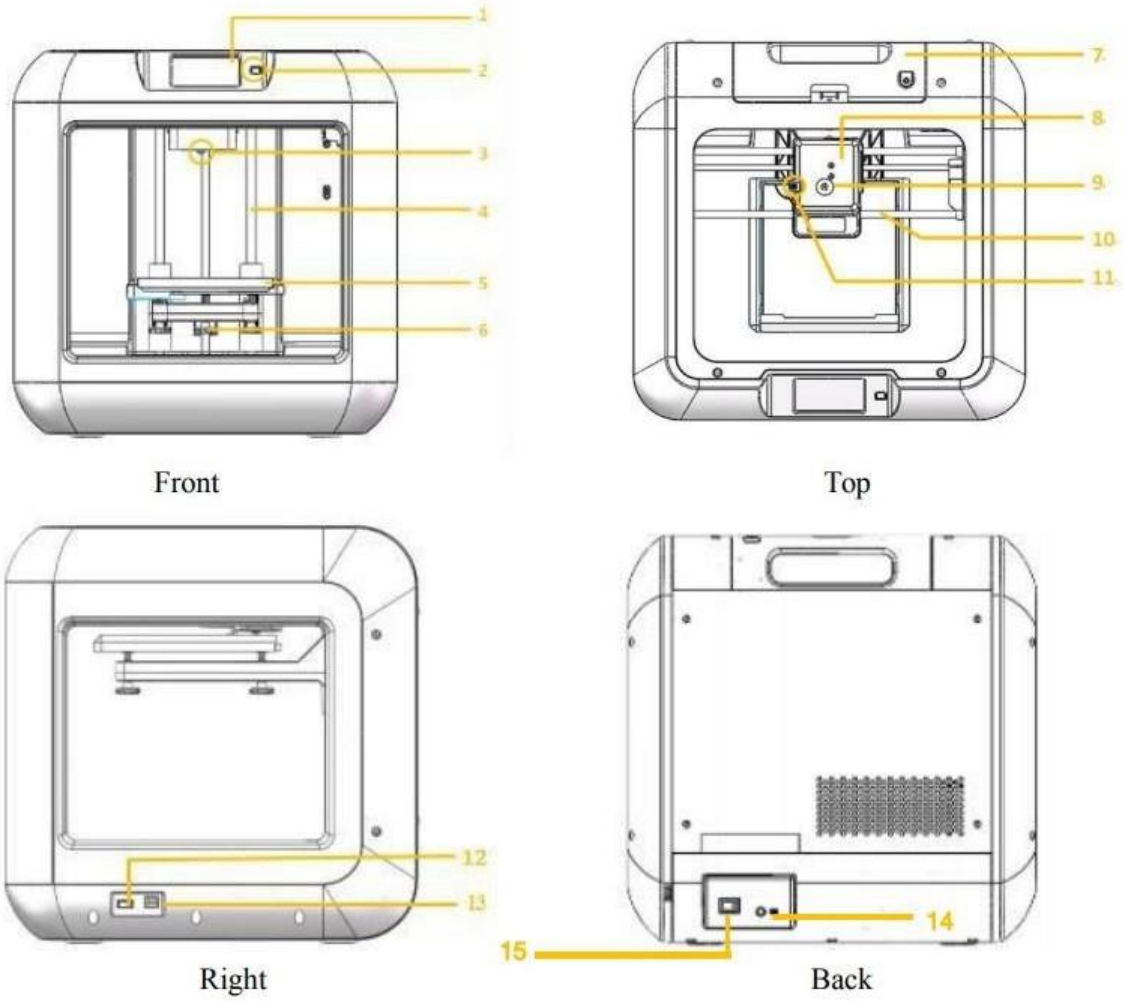


Figure 2.1.1.1 View 3D Printer

| | | |
|---|---|---|
| 1. Touch screen | 2. Touch screen button | 3. Nozzle |
| 4. Z-axis guide rod | 5. Build plate | 6. Leveling nut |
| 7. Filament cartridge | 8. Extruder | 9. Filament intake |
| 10. X-axis guide rod | 11. Spring presser | 12. USB stick input |
| 13. USB cable input | 14. Power input | 15. Power switch |

### 2.1.2 Term :-

| | |
|---|---|
| Build Plate | The surface on which the Finder builds an object. |
| Build Tape | The blue tape that covers Finder's build plate so that the object can stick to the build plate well. |
| Build Volume | The three dimensional amount of space that an object will use once it is completed. The largest build volume of Finder is 140*140*140mm |
| Levelling Nuts | Nuts under the build platform that are used for adjusting the distance between the nozzle and build plate. |
| Extruder | The device that draws the filament from the spool, melts it and pushes it through a nozzle into the build plate |
| Nozzle | Also called "print head", which located at the bottom of the extruder where heated filament is squeezed out |
| Cooling Fan | To cool the outer assembly of the extruder and gear motor |
| Filament Intak | An opening located at the top of the extr |
| Filament Guide Tube | A black plastic piece that guides the filament from the filament cartridge to the filament i |
| Filament Cartridg | A specific box for placing Flash Forge filamen |
| Solid Glue Stick | A solid adhesive used for making the model stick to the build plate firml |
| Unclogging Pin Tool | A tool that used for cleaning and unclogging the extruder |
| Stamping Wrench | A tool that used for seizing the nozzle's metal cube or throat tube |

Table 2.1.1.1 Terms

## 2.1.3 Interface Menus :-

| | |
|---|---|
| | **Build** |
| | Read the print file from<br>• The local memory card<br>• The USB stick<br>• The Polar Cloud printing<br>• Back |
| | Choose Batch files<br>1. Tap and hold to select the file<br>2. Select the file you want to delete<br>3. The selected file has a tag (on the right)<br>4. Tap the delete icon at the top right to delete all the selected files |
| 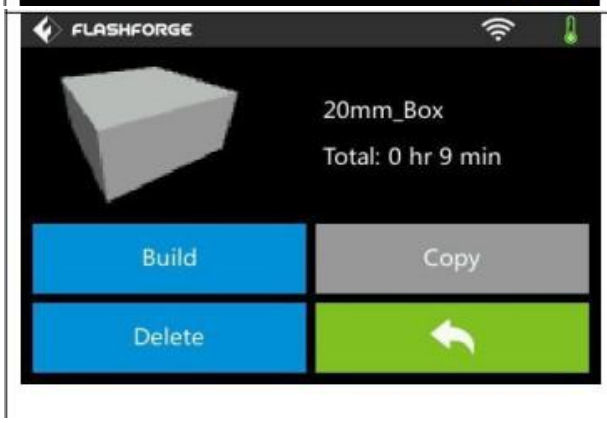 | Select the target print file among the list<br>• Build: To begin printing<br>• Copy: To copy the files to the local memory card from the USB stick.(The button is not available while printing from local memory card )<br>• Delete: To delete the print file<br>• Back |

Figure 2.1.3.1 Inter Face Menus

Print interface

• Abort: To abort the print job.

• Pause/Resume: To suspend or resume the print job.

✍Tools:To check status or modify settings during printing: build time, Z axis, filament used, printing speed, light status, change filament, finish-shutdown.

✍ Extruder temperature: Can be changed during printing.

To set extruder temperature during printing:
After extruder temperature has reached target temperature, temperature figure will be underlined in print interface,
Tap the temperature figure to adjust;
Tap **[Yes]** to save the setting while tap **[No]** to cancel the setting.

Tools in print interface

✍Printing speed: To change printing speed during printing by tapping the underlined speed figure.

✍Light bulb: To turn on/off the light.

✍Filament: To change filament during printing. (Note: You need to suspend the printing operation first)

✍ Finish-Shutdown: To start auto shutdown after print job finished.

✍ Cancel: To end the tool interface and return to the print interface.

To set the printing speed during printing
Tap the speed figure to adjust;
Tap **[Yes]** to save the setting while tap **[No]** to cancel the setting.

Figure 2.1.3.2 IFM

## 2.2 Accessories :-

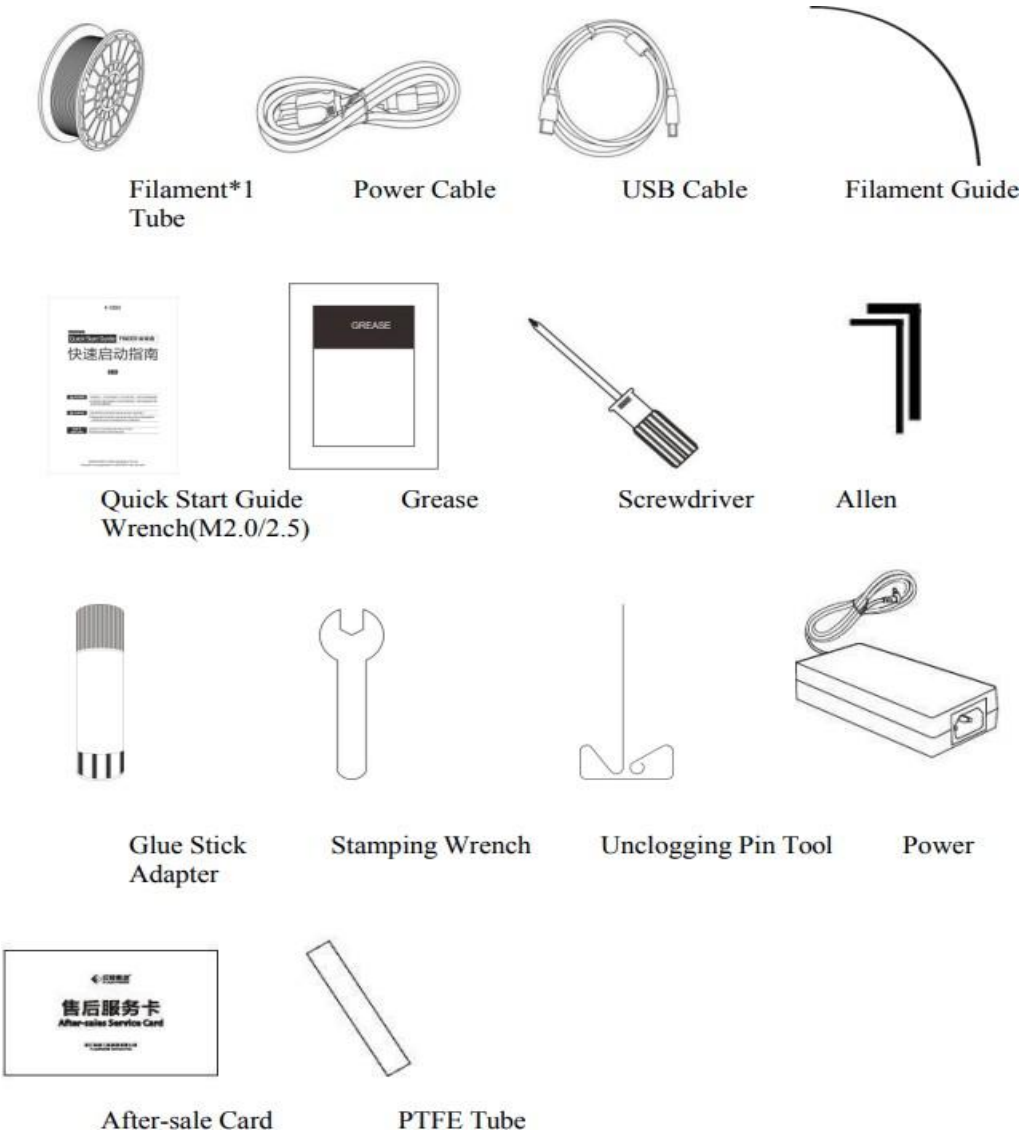


Figure 2.2.1 Accessories

**Filament*1 -**Used for printing, detailed instruction in unpacking and hardware assembly chapter of the user manual.

**Power Cable -**Used to power on the printer, detailed instruction in unpacking chapter of user manual.

**USB Cable -**Used to connect the computer to printer, then print files can be transferred and printed out, detailed instruction in unpacking and 7.2 print methods of the user manual.

**Filament Guide Tube -**Used to guide the filament from the filament spool(after filament detector) to extruder filament intake, detailed instruction in unpacking and 4.3 Loading Filament chapter of the user manual.

**Quick Start Guide -**Used for first print instruction, help you finish your successful first print quickly.

**Grease -**Used to lubricate the X,Y, Z axis or other parts, please refer to flash forge support team before you take maintenance steps, for printer and user good.

**Screwdriver -**Used to tighten or untighten the screws and nuts when maintenance, please refer to flash forge support team before you take maintenance steps, for printer and user good.

**Allen Wrench (M2.0/2.5) -**Used to tighten or untighten the screws when maintenance, please refer to flash forge support team before you take maintenance steps, for printer and user good.

**Glue Stick -**Used to fasten the model to the build plate when printing, apply the glue to build plate for a thin layer, make sure model's bottom layers are fine printed and fastened.

**Stamping Wrench -**Used to tighten or untighten the nozzle or Teflon tube or other parts when maintenance, please refer to flash forge support team before you take maintenance steps, for printer and user good.

# CHAPTER 3

## GENERAL PRINCIPAL

**3.1 Modelling:-** In the modelling phase, interns would focus on creating digital

Figure 3.1.1 Modelling in 3d printer

models of objects using computer-aided design (CAD) software. This involves understanding the design requirements, conceptualizing the object, and translating those ideas into a digital format. The interns would learn how to use CAD software proficiently, mastering techniques for creating accurate and detailed models. Emphasis would be placed on ensuring that the digital models are suitable for 3D printing, taking into account factors such as geometric complexity, support structures, and material considerations

.**3.2 Printing :-** The printing phase involves operating and managing 3D printers to bring the digital models to life. Interns would learn about different 3D printing technologies, such as fused deposition modelling (FDM), stereolithography (SLA), or selective laser sintering (SLS), and gain hands-on experience with various types of 3D printers. They would learn how to prepare the printers for printing, load materials, set printing parameters, and monitor the printing process. Additionally, interns would gain insight into troubleshooting common printing

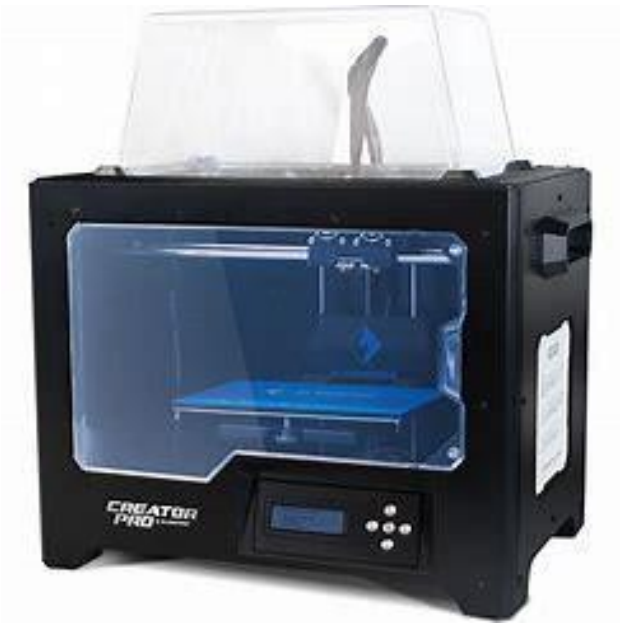


Figure 3.2.1 Printing

issues, optimizing print settings for quality and efficiency, and managing print queues for multiple projects.

**3.2 Finishing :-** In the finishing phase, interns would learn about post-processing techniques to enhance the quality and appearance of 3D printed objects. This may

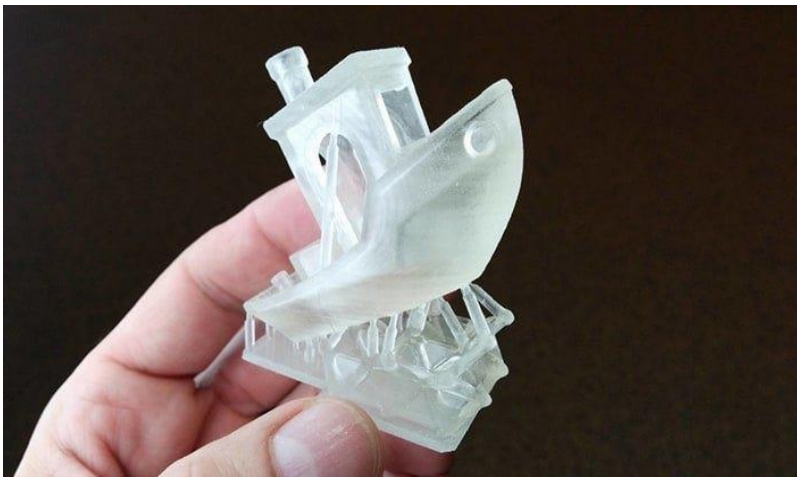

Figure 3.3.1 Finishing

include removing support structures, sanding, smoothing, painting, or applying other surface finishes. Interns would explore different finishing methods and materials, understanding their effects on the final product. They would also learn

about quality control measures to ensure that finished objects meet the desired specifications and standards. Additionally, interns would gain exposure to documentation and record-keeping processes to track project progress and outcomes

**3.3 Modelling Part :-** This Part is build in solid work software And Because this part it gives as in YouTube reference and design

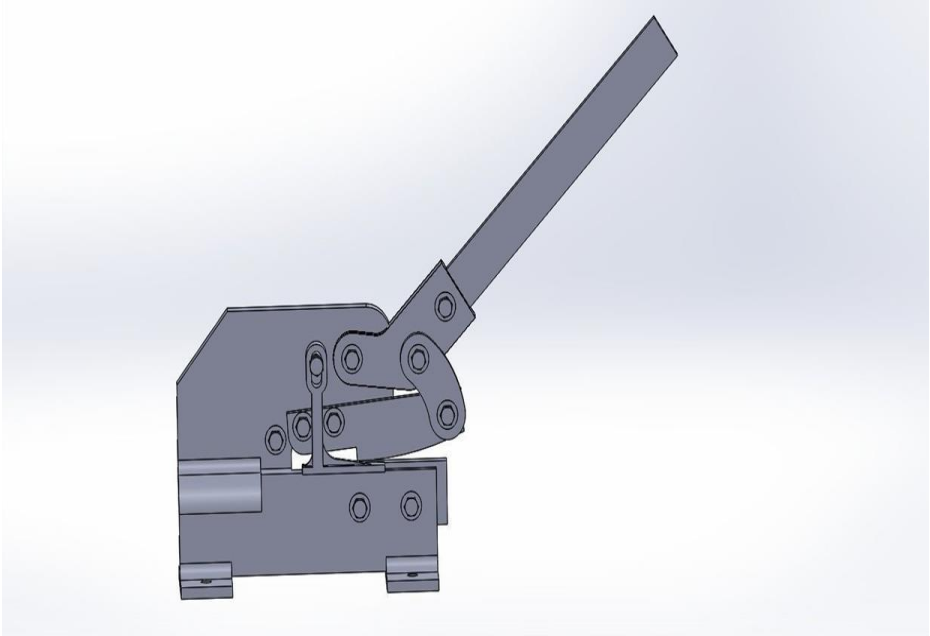

ASSEBLY

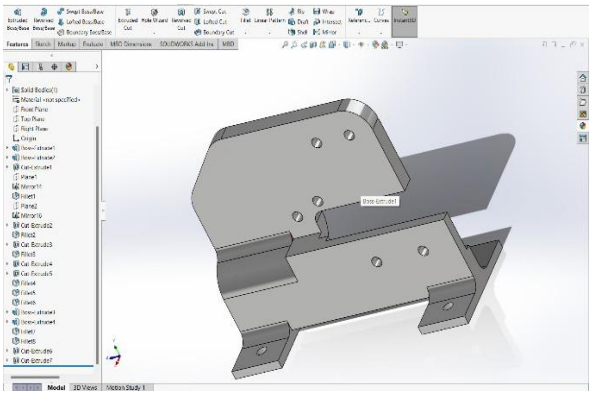

Machine body

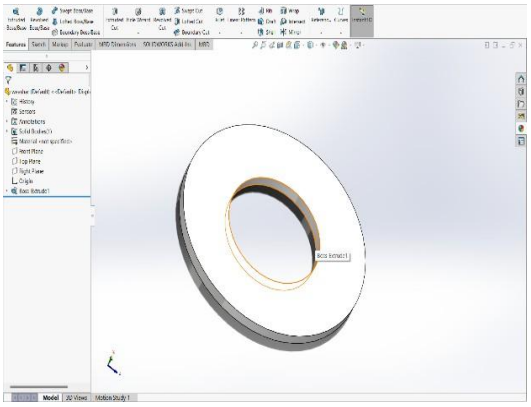

Weashar

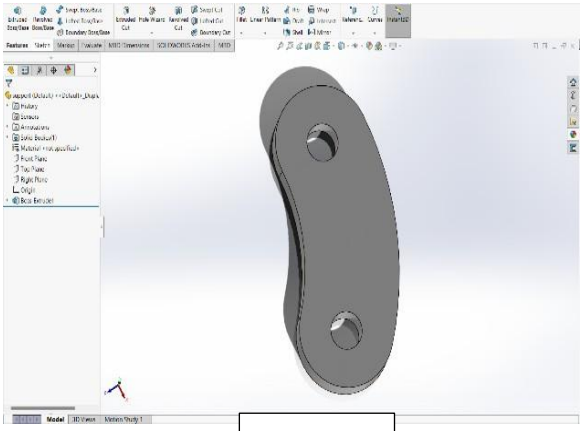

Support

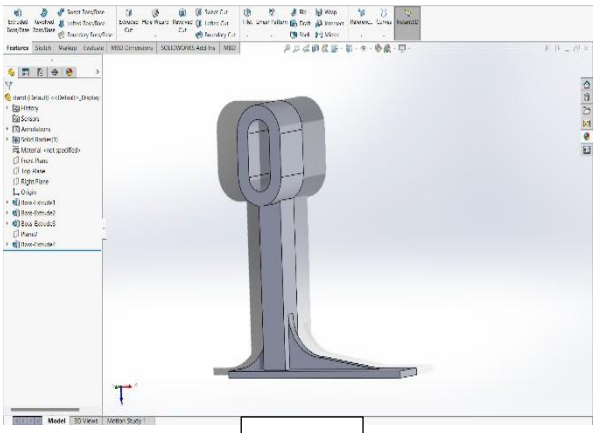

Stand

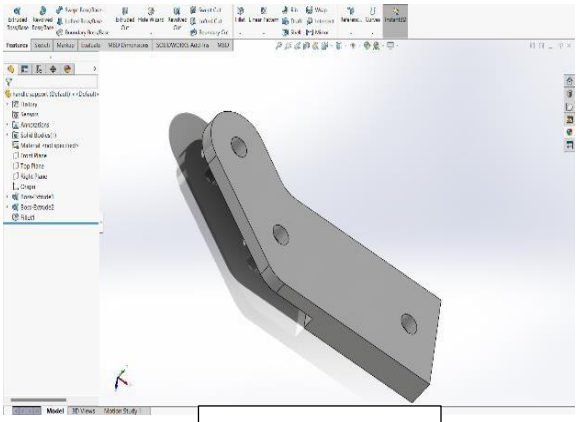

Handle Support

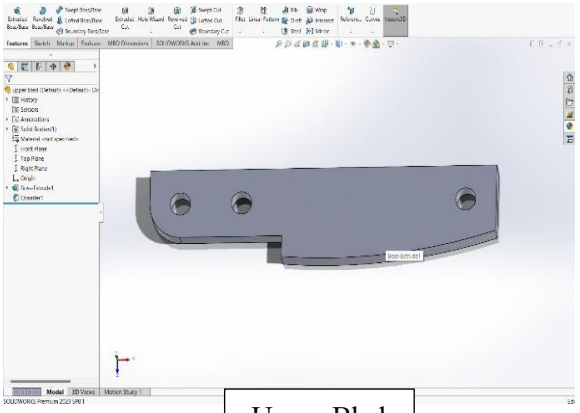

Upper Bled

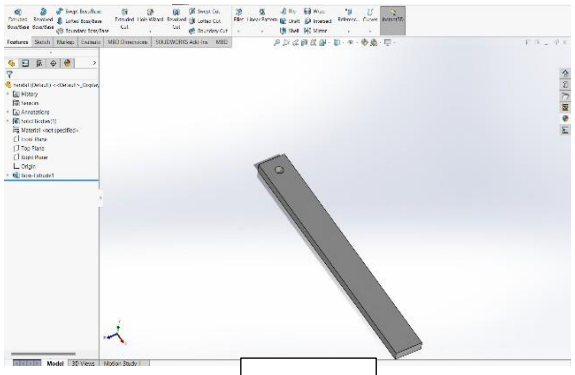

Handal

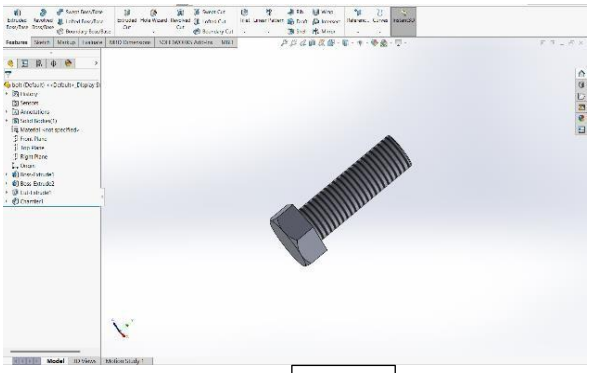

Nut

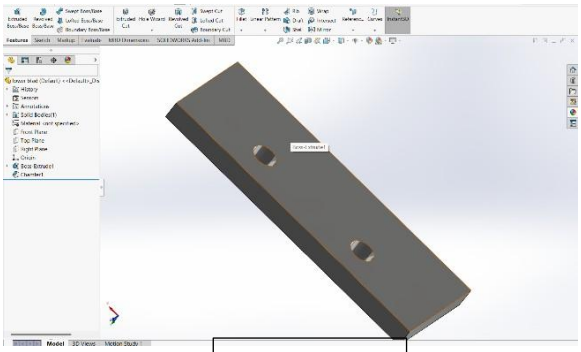

Lower Bled

# CHAPTER 4

## 4.PROCESSES

| Type | Technologies | Materials |
|---|---|---|
| Extrusion | Fused deposition modeling (FDM) | Thermoplastics (e.g. PLA, ABS), HDPE, eutectic metals, edible materials, Rubber (Sugru),Modeling clay, Plasticine, RTV silicone, Porcelain, Metal clay (including Precious Metal Clay) |
| Wire | Electron Beam Freeform Fabrication(EBF) | Almost any metal alloy |
| Granular | Direct metal laser sintering (DMLS) | Almost any metal alloy |
| | Electron-beam melting (EBM) | Almost any metal alloy including Titanium alloys |
| | Selective laser melting (SLM) | Titanium alloys, Cobalt Chrome alloys, Stainless Steel, Aluminium |
| | Selective heat sintering (SHS) | Thermoplastic powder |
| | Selective laser sintering (SLS) | Thermoplastics, metal powders, ceramic powders |

Table 4.1 Processes

## 4.1 Extrusion Deposition :-

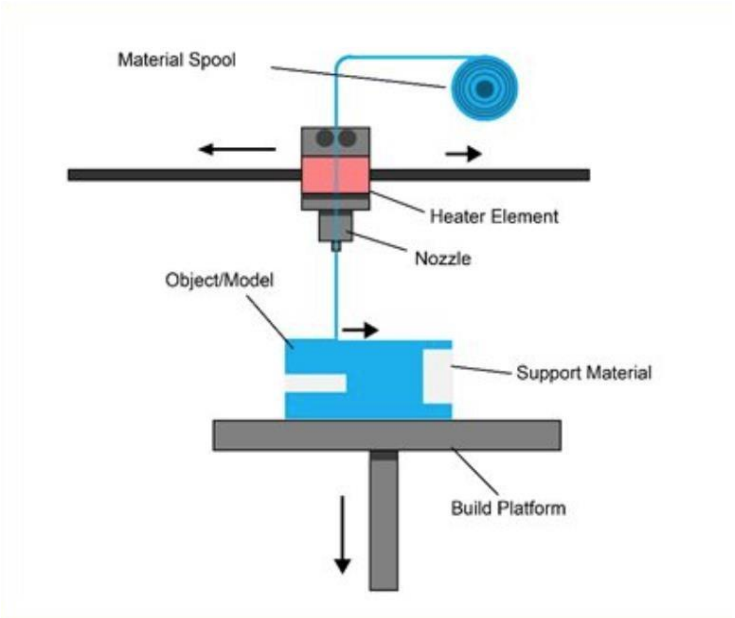


Figure 4.1.1 Extrusion Deposition

Fused Deposition Modelling (FDM) was pioneered by S. Scott Crump in the late 1980s and later commercialized by Stratasys in 1990. With the expiration of its patent, FDM technology saw widespread adoption in both commercial and DIY settings, leading to a significant decrease in its cost. In FDM, objects are built layer by layer by extruding thermoplastic material through a heated nozzle, which immediately hardens to form each layer. This material is typically supplied as a filament wound on a coil. The extrusion head, controlled by stepper or servo motors, moves in horizontal and vertical directions according to instructions from computer-aided manufacturing (CAM) software.

Various thermoplastics are used in FDM, including ABS, PC, PLA, HDPE, PC/ABS, PPSU, and HIPS. Filaments are typically made from virgin resins, though there are initiatives to recycle post-consumer plastic waste into filament.

While FDM is versatile, it has limitations in fabricating certain shapes, such as stalactite-like structures, which require support during printing. However, thin

supports can be designed into structures and later removed during finishing processes

**4.2 Granular Material Binding :-** Selective fusing of materials in a granular bed is another 3D printing approach where parts of each layer are fused together while

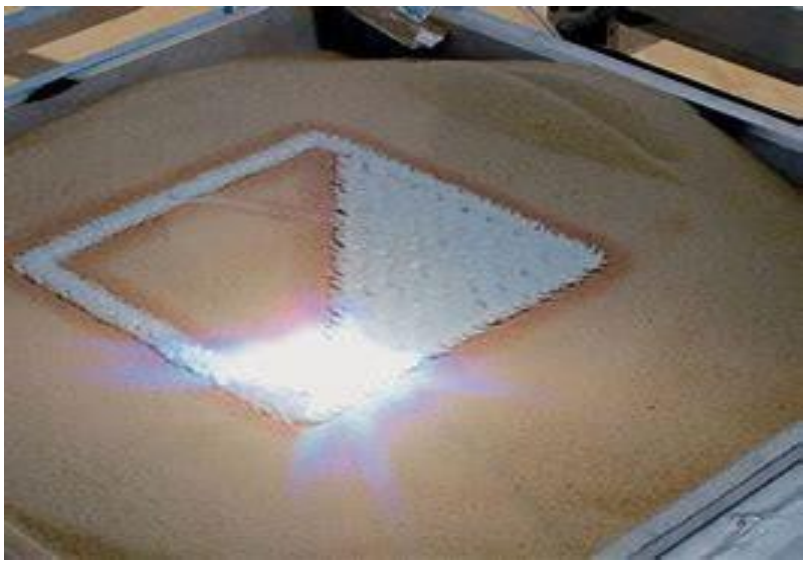

Figure 4.2.1 Granular Material

additional granules are added and the process repeats until the object is complete. This method, used in techniques like selective laser sintering (SLS) and direct metal laser sintering (DMLS), utilizes unfused material to support overhangs and thin walls, reducing the need for temporary supports. A laser is commonly employed to sinter the granular media into a solid, allowing for the production of parts from a variety of materials including metals and polymers like PA, PEEK, and elastomers.

Selective Laser Melting (SLM) and Electron Beam Melting (EBM) are additive manufacturing technologies for metal parts. SLM uses a high-energy laser to fully melt metal powder, creating dense materials with mechanical properties similar to conventionally manufactured metals. EBM, on the other hand, employs an electron beam in a high vacuum to melt metal powder layer by layer. Unlike

sintering techniques, SLM and EBM produce fully dense, void-free parts with high strength, particularly suitable for titanium alloys.

**4.3 Limitation :-** In some printers, paper can be used as the build material, resulting in a lower cost to print. During the 1990s some companies marketed printers that cut cross sections out of special adhesive coated paper using a carbon dioxide laser and then laminated them together. In 2005, Mcor Technologies Ltd developed a different process using ordinary sheets of office paper, a Tungsten carbide blade to cut the shape, and selective deposition of adhesive and pressure to bond the prototype.

# CHAPTER 5

## 5.1 Software Acquisition :- :

Method 1 : To get the newest Flash Print software installation package from Flash forge.

official website: http://www.flashforge.com

Support---Downloads---Flash Print---choose the software version---download

Method 2: Open the link below to download the installation package:

http://www.flashforge.com/support-center/flashprint-support/

Figure 5.1.1 Flash Printer support FP

## 5.2 Exploring View 3d Flash Printer :-

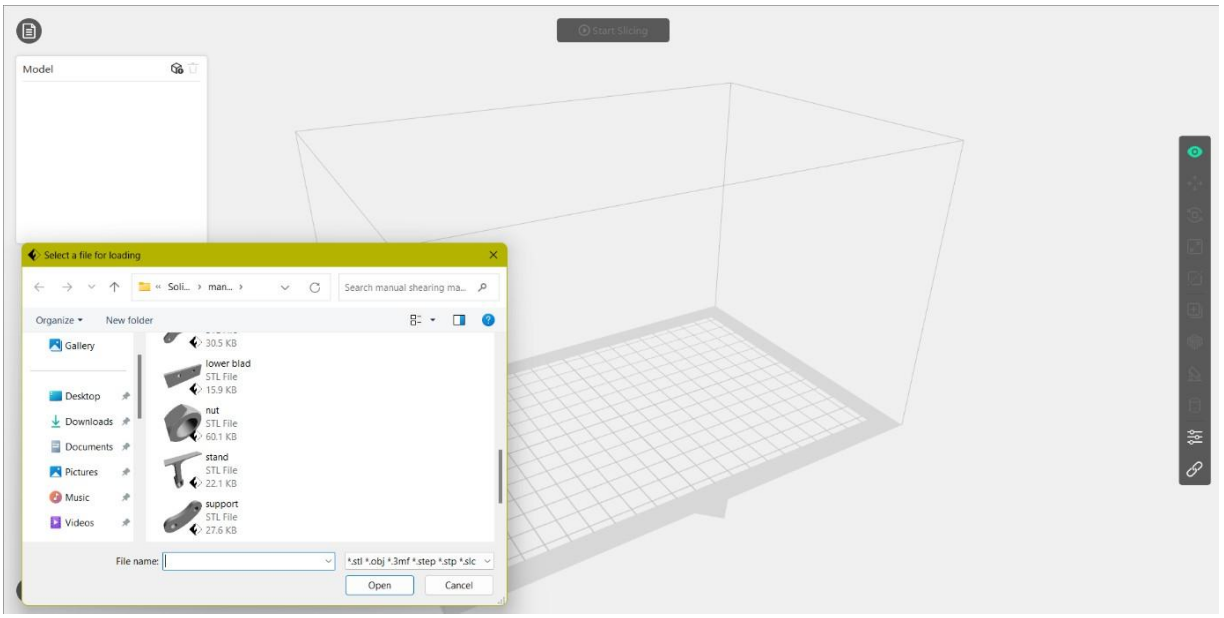


Figure 5.2.1 Exploring Over View

**5.2.1 View : -** Changing views Change model views by moving, rotating, scaling

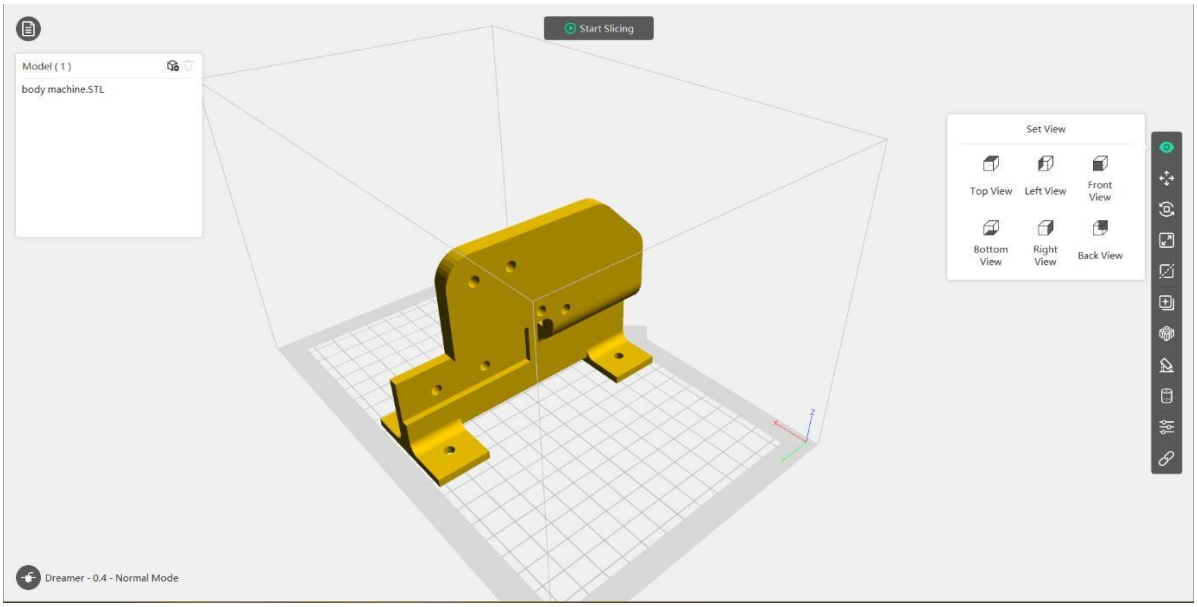


Figure 5.2.1.1 Flash Printer View

**5.2.2 Move :-** Method 1: Click the [Move] icon on the left, hold down the left mouse button and drag to adjust the location of the model in XY direction. Hold down the Shift key, hold down the left mouse button and drag to adjust the location of the model in Z direction. The distance and the direction of the

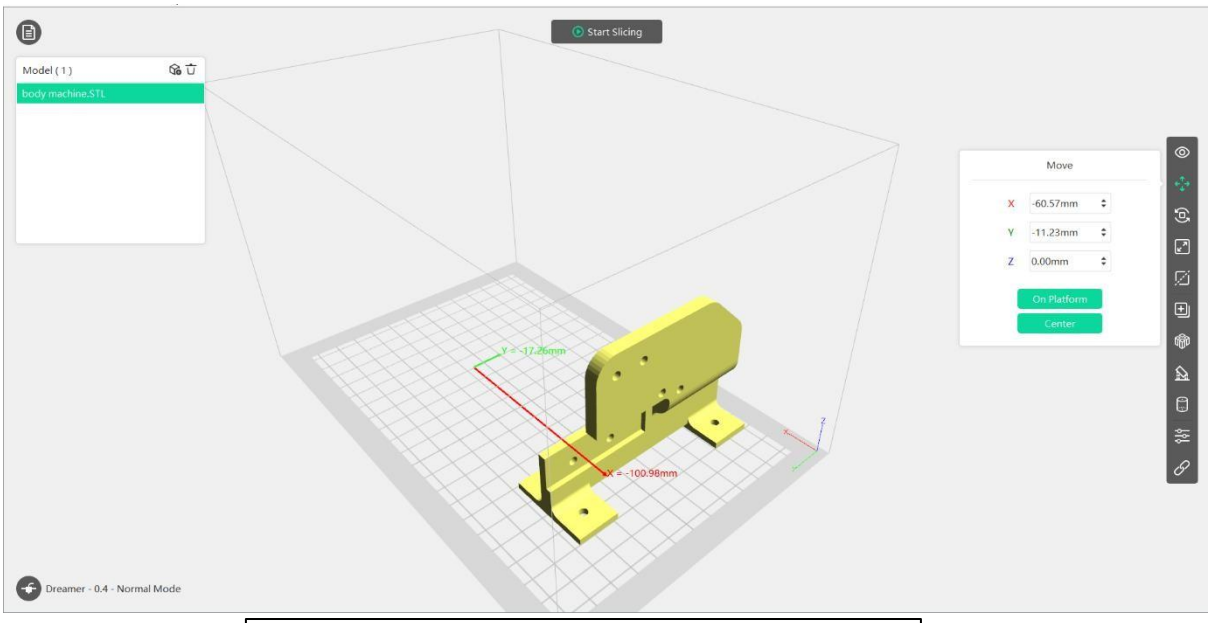


Figure 5.2.2.1 Move Command

movement shall be displayed.

Method 2: Click the [Move] button on the left and then enter the distance value. Click [Reset] to reset distance values.

**5.2.3 Rotate :-** Method 1: Click the [Rotate] icon on the left and three mutually perpendicular rings appear around the object Click one ring and rotate on the present axis, you will see the rotation angle and direction in the center of circle. In this way, you could make the model rotate on X/Y/Z axis

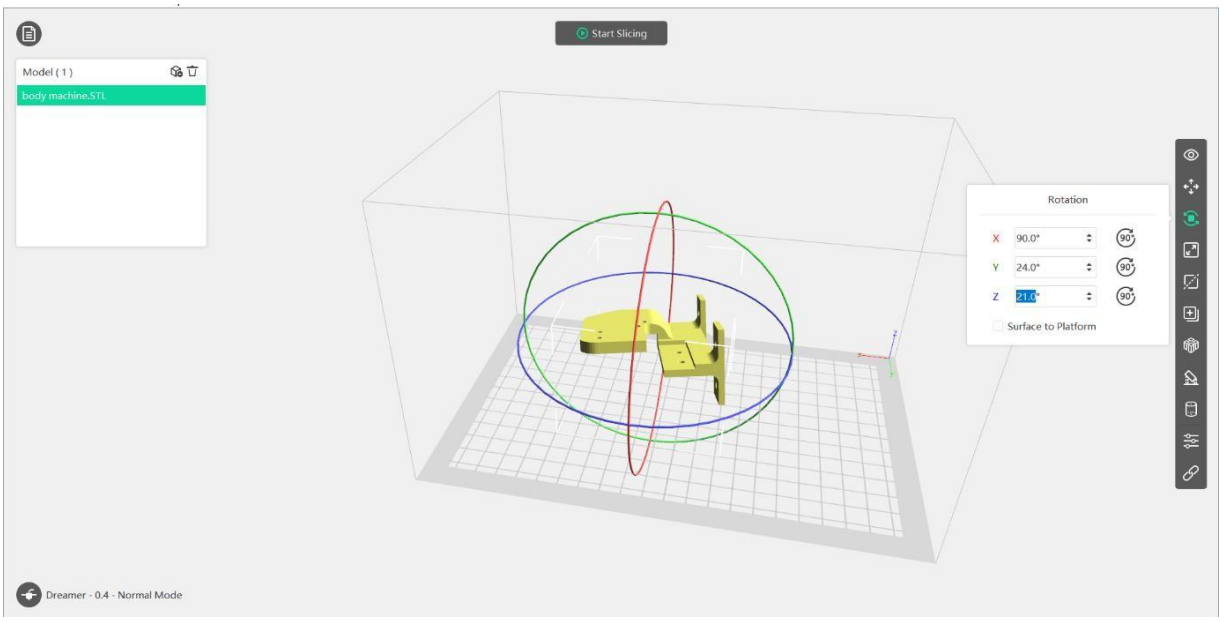


Figure 5.2.3 Rotate Command

Method 2: Click the [Rotate] icon on the left, and then enter into rotating angel values in X/Y/Z axes positioning. Click [Reset] to reset rotating angel values.

**5.2.4 Scale :-** Method 1: Click the [Scale] icon on the left, hold down the left mouse button and scale the model. The corresponding values will display near the object.

Method 2: Click the [Scale] icon on the left and then enter into scale values in X/Y/Z axes positioning. Click the [Maximum] button to get largest size possible for building. Click [Reset] to

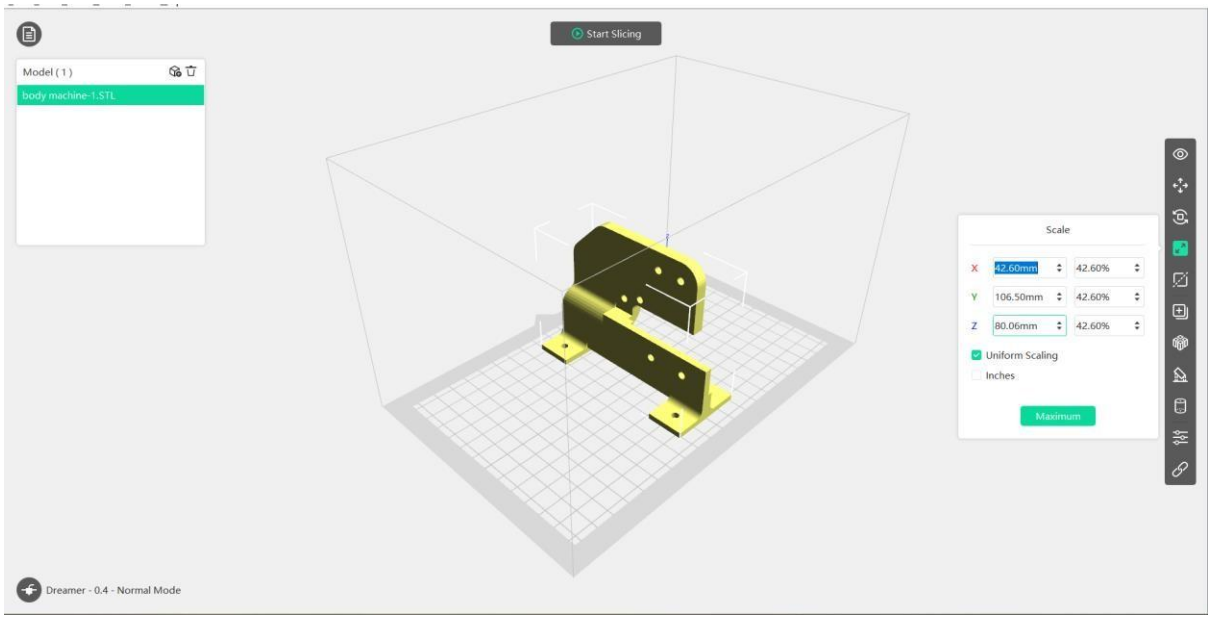


Figure 5.2.4.1 Scale Command

**5.2.5 Cut :-** Left-click on the model to select it and double-click on the [Cut] to set the cut plane. The direction and posiion are.

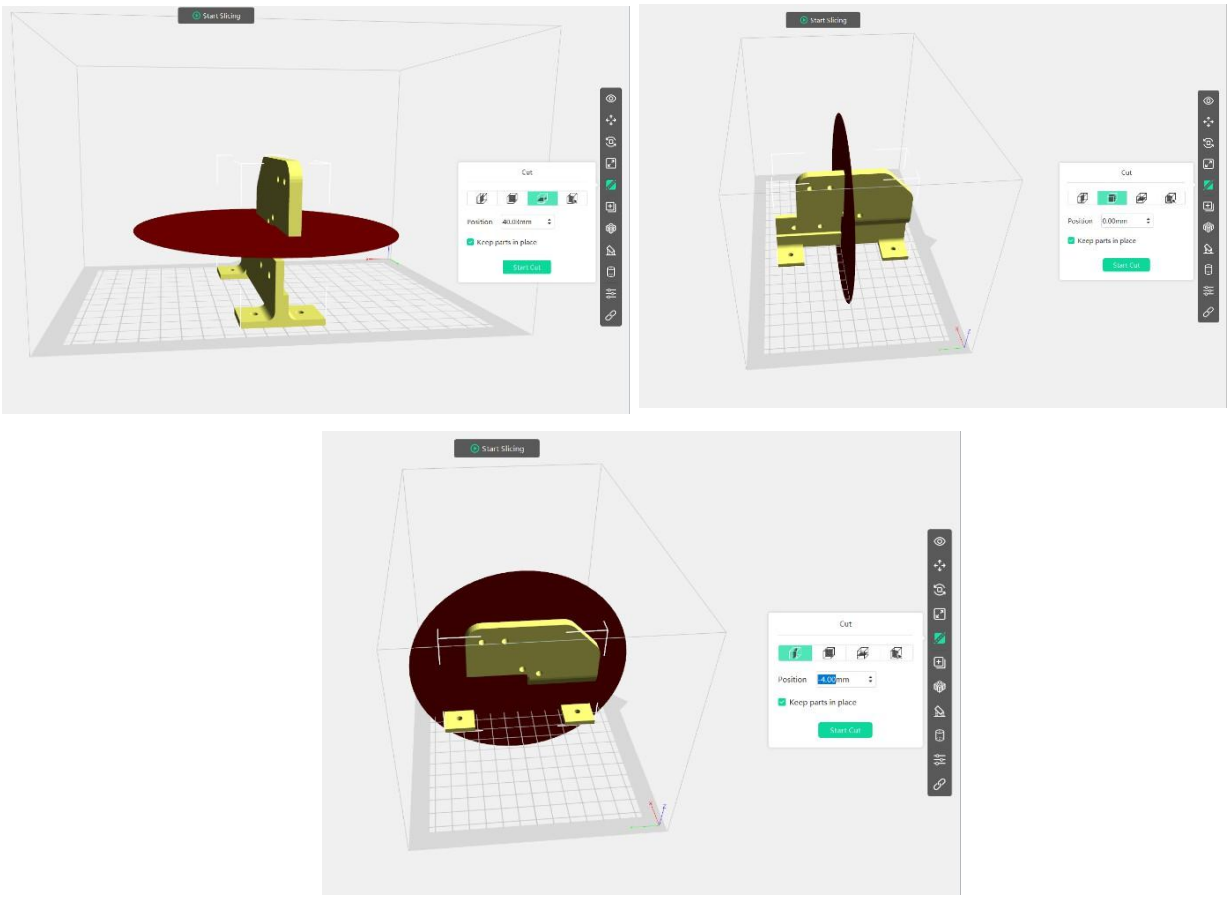


Figure 5.2.6 Cut Command In (Xyz) Axis

### 5.2.6 Slicing :-

Preview : Choose to enter preview interface or not Print when slice done: Print or not when slice done

Material type: Choose according to the type of model

Supports: When print suspended structure models, support is necessary. Click [supports] to create support part for the printing.

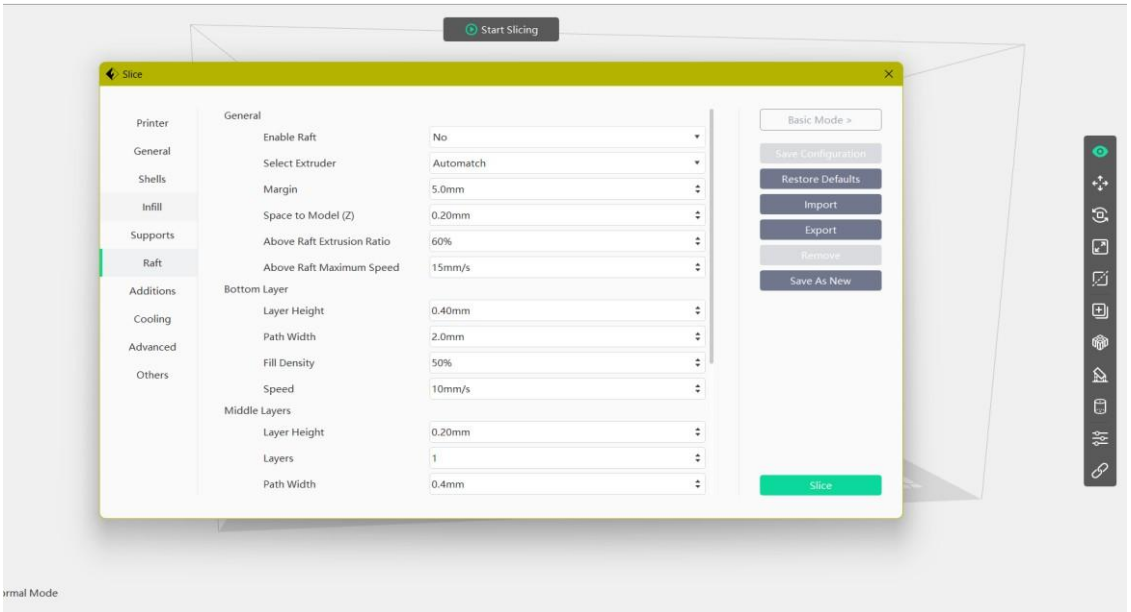


Figure 5.2.6.1 Slicing In General

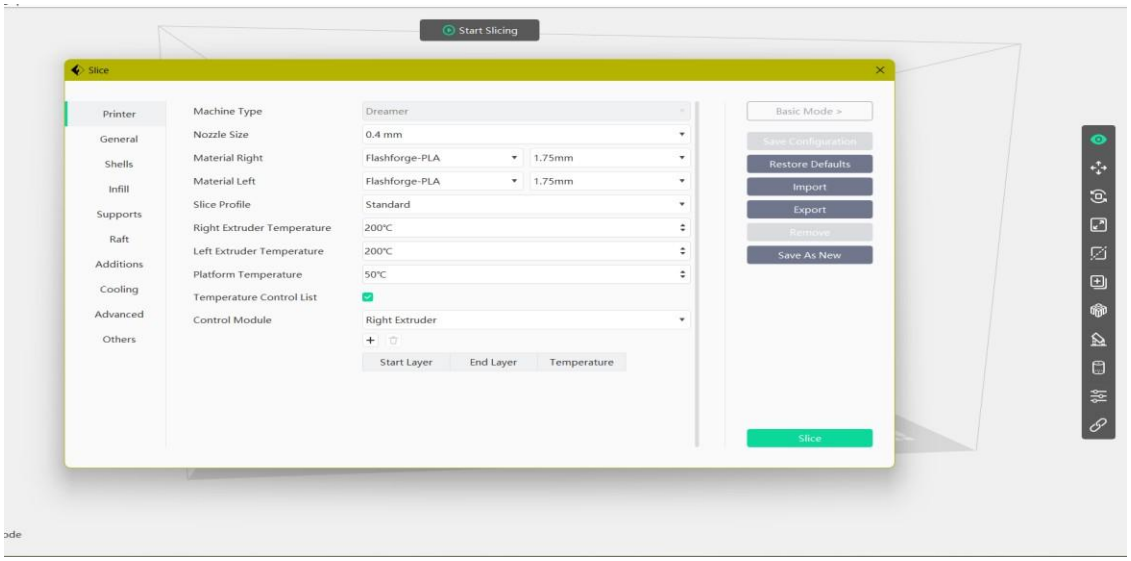


Figure 5.2.6.2 Slicing In Draft Changes

•

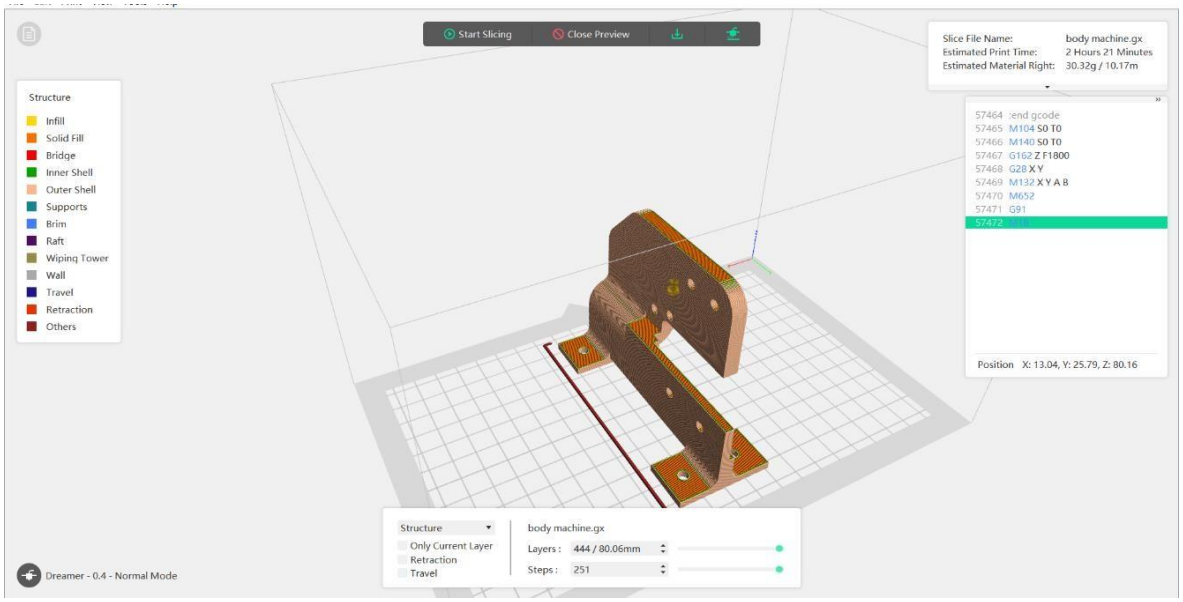


Figure 5.2.6.3 Slicing View

**5.2.7 Print** :- First Layer Height: This is the first layer of the model, which will affect the sticking performance between the model and platform. Maximize is 0.4mm, usually the default is OK

Extruder Temper atur e: Recommended extruder temperature is 220

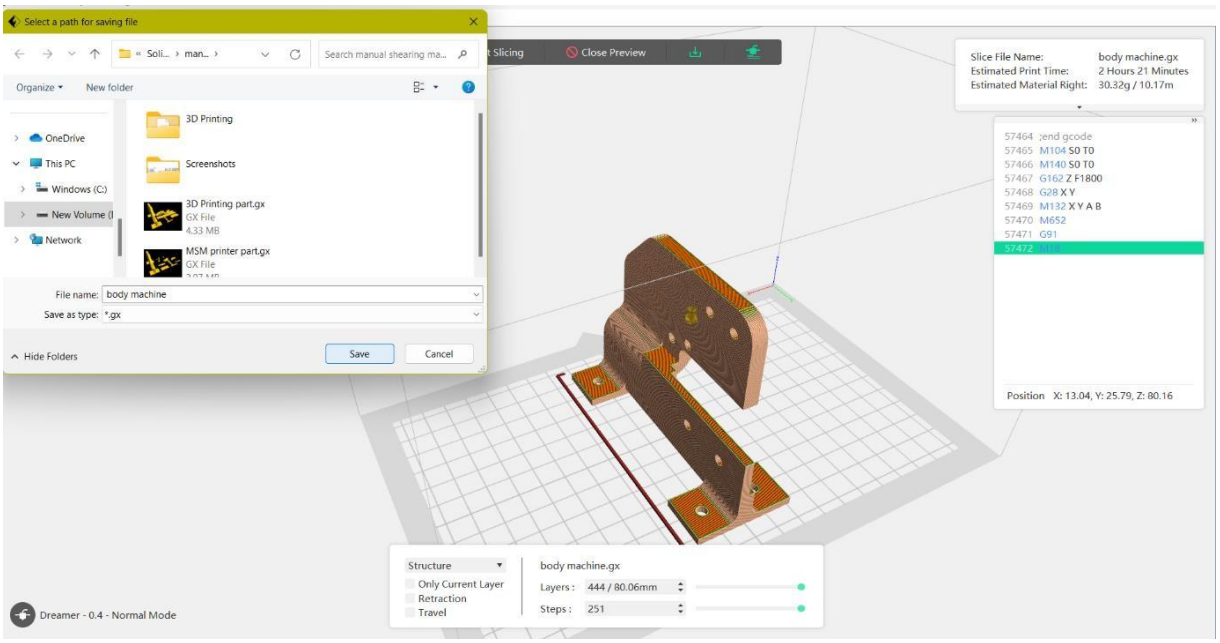


Figure 5.2.7.1 Download And Print

# CHAPTER-6

## 6.1 Which Cad Software Used In Design :- INTER FACE CAD SOFTWARE

**AutoCAD**: Developed by Autodesk, AutoCAD is one of the most widely used CAD software programs. It's versatile and suitable for 2D drafting as well as 3D modelling and rendering.

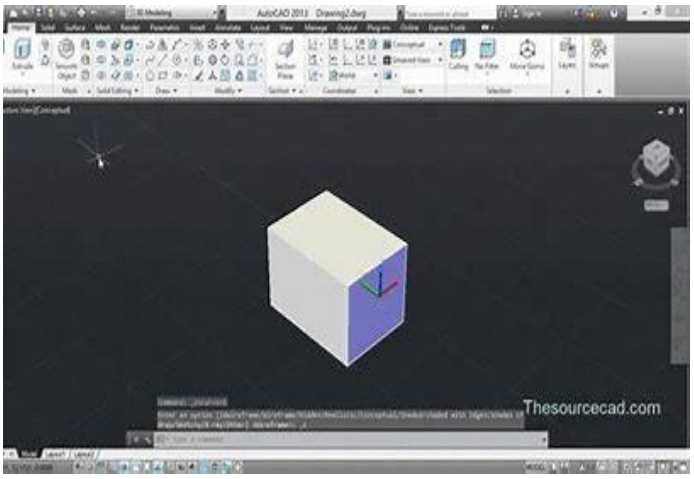


AutoCAD Interface

**SolidWorks**: SolidWorks is a parametric CAD software primarily used for 3D modelling , mechanical design, and product development. It's known for its user-friendly interface and powerful features.

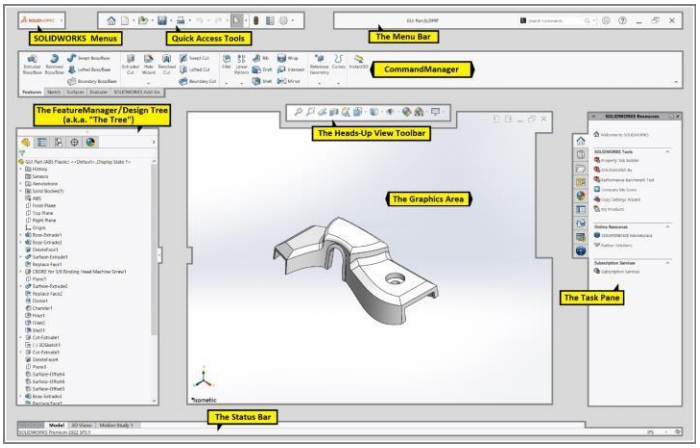


SolidWorks Interface

**CATIA**: CATIA (Computer-Aided Three-Dimensional Interactive Application) is a comprehensive CAD/CAM/CAE software developed by Dassault Système s. It's widely used in aerospace, automotive, and other industries for complex 3D modelling and simulation.

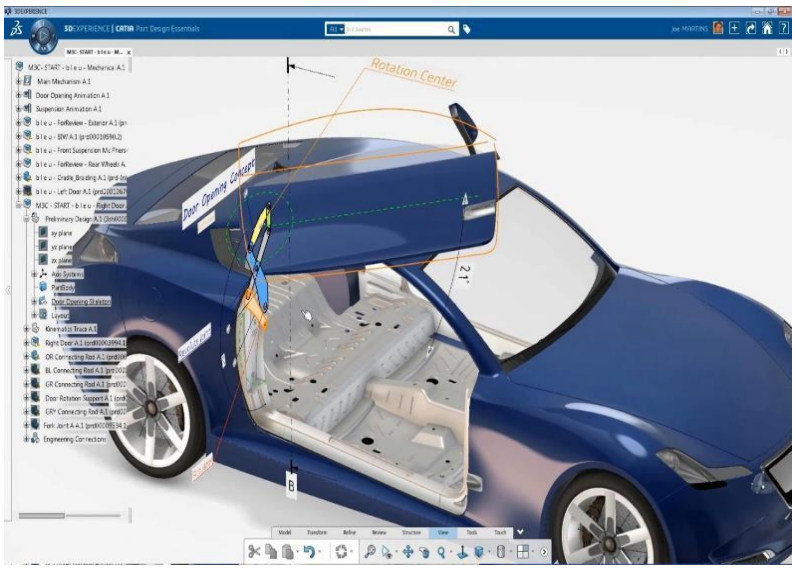


CATIA Interface

**Fusion 360**: Fusion 360, also developed by Autodesk, is a cloud-based CAD/CAM/CAE software used for product design, engineering, and manufacturing. It offers integrated collaboration and simulation tools

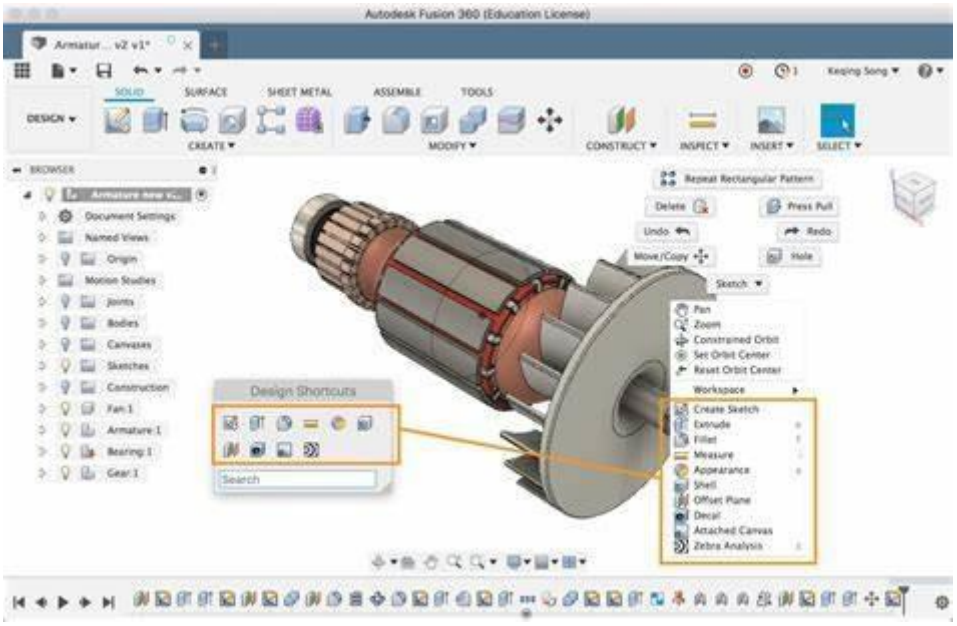


Fusion 360 Interface

# CHAPTER-7

## 7. Maintenance And Solutions :

| Problem | Cause | Corrective Action |
|---|---|---|
| Extruder head building off center. | Finder has lost track of the extruder head's exact location and is failing to build | Sending the extruder head to the home position will recalibrate the Creator3.Cancel your object, clear build plateform, send the extruder head to the home position, and restart the object. |
| PLA is not extruding or sticking to the build tape properly. | This can be caused by the build plateform not being leveling with the extruder head. | Leveling the build platform will align the extruder head and ensure a better object quality. Cancel your object, clear build platform, level the build platform, and restart the object. |
| Finder froze before my object started. | Finder may have received con icting commands. | Turn power switch off, wait 30 seconds, and turn power switch on. |
| Spaghetti mess at end of build. | A layer of your object did not stick properly, model was saved with minimal surface area contacting the build platform, or object was built oating above the build platform with no support selected. | Use the preview feature in your slicing software to see the first layer height and position. Build with supports when necessary.<br>Contact customer service on how to calibrate the Z-Gap Offset. |
| Part only built halfway. | Filament ran out.<br>Filament clogged during build. | Replace filament and resume build. See "No filament coming out". |

Table 7.1 Maintenance and solutions

**7.1 Unlogging the extruder :-** Click on the filament change button on the screen and wait for extruder to heat up. As filament starts to purge, insert the unclog tool into the extruder intake (top).

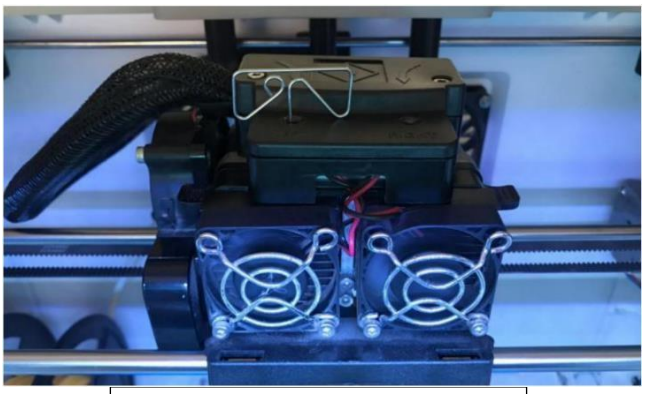

FIGURE 7.1.1 Unlogging The Extruder

# CHAPTER- 8

## Actual 3d Printing Model About Project (Manual Shearing Machine)

### 8.1 About Solid Work Model :-

SolidWorks is a comprehensive CAD software with:

Figure 8.1.1 SolidWorks Logo

- Intuitive user interface for easy 3D modelling.
- Parametric modelling for easy design modification.
- Assembly modelling for complex assemblies.
- Drafting tools for detailed documentation.
- Built-in simulation and analysis for design testing.
- Seamless integration with other software.
- Extensions and add-ons for specialized needs.
- Comprehensive training and support resources.

### 8.2 Model Developed Load Meshing As Calculated Stress, Strin, Displacement (Simulation SW) :-

**Load/Pressure Meshing (Act.88.3N) :-**

In short, SolidWorks meshing capabilities include:

- Automatic mesh generation with user-defined settings for mesh density and element size.
- Manual refinement for areas of complex geometry or high stress concentrations.

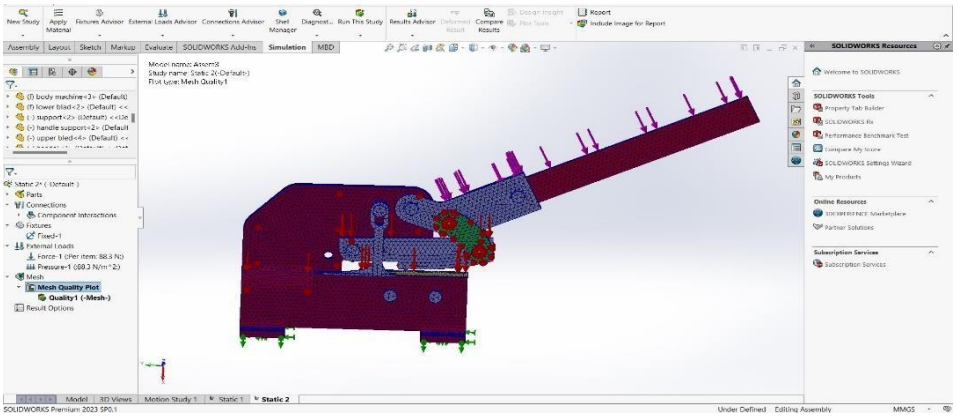

Figure 8.2.1 Meshing in (SW)

- Tools for assessing mesh quality to ensure accurate simulation results.
- Application of boundary conditions to simulate real-world conditions.
- Adaptive meshing to refine the mesh in areas of high stress or deformation.
- User control over mesh parameters for customization to specific requirements

**Stress :-**

In short, SolidWorks stress simulation allows users to:

- Define material properties, constraints, and loads to simulate real-world conditions.
- Automatically generate or manually refine mesh for accurate stress and deformation calculations.

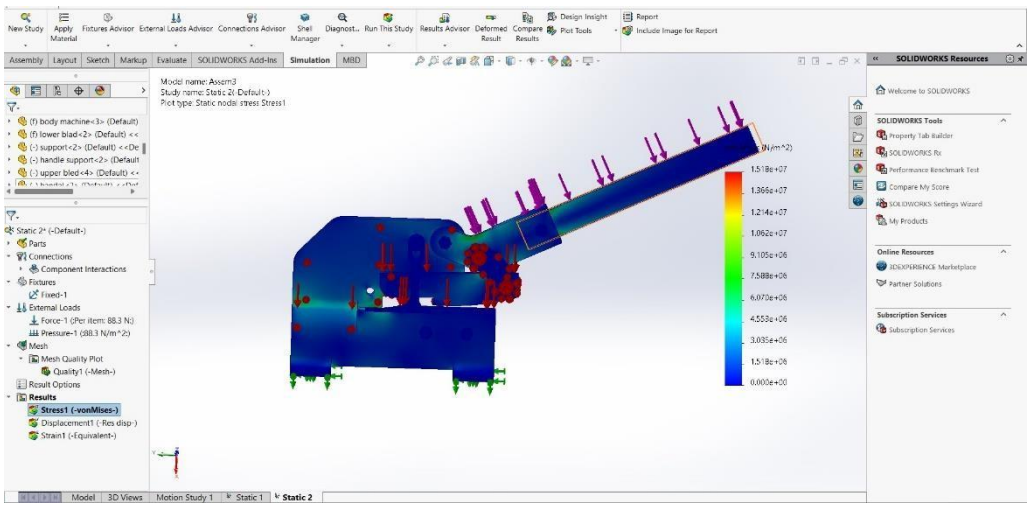

Figure 8.2.2 Stress in (SW)

- Utilize finite element analysis (FEA) techniques to calculate stress, strain, and deformation.
- Visualize results including stress distribution, displacement, and factor of safety.
- Validate designs against requirements and standards, iterating as necessary.
- Optimize designs for performance criteria such as weight, stiffness, and stress concentrations

**Strin :-**

In short, strain simulation in SolidWorks involves:

- Defining material properties such as Young's modulus and yield strength.
- Applying loads and constraints to simulate real-world conditions.
- Meshing the model for accurate strain calculation.

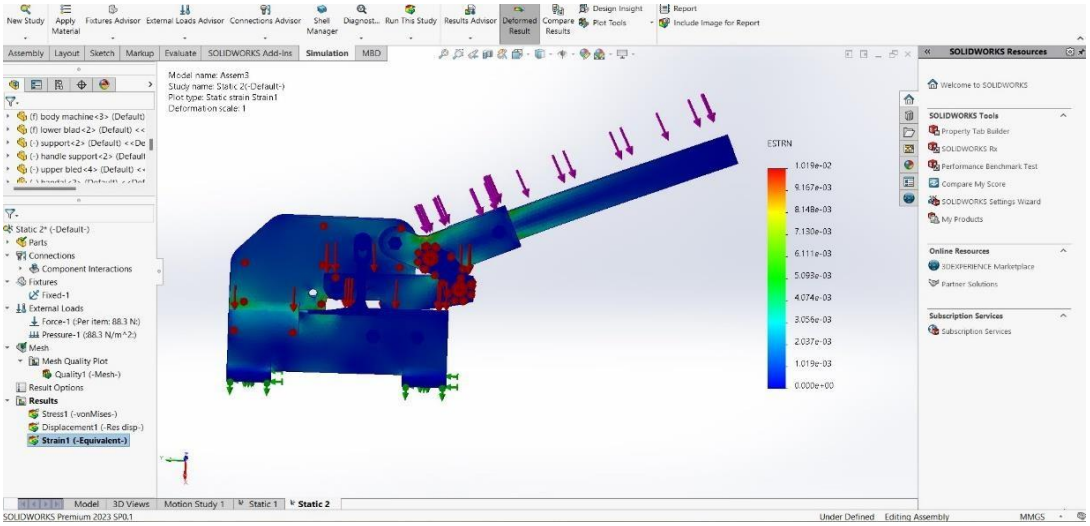


Figure 8.2.3 Strin in (SW)

- Using finite element analysis (FEA) techniques to calculate strain distribution.
- Visualizing results through contour plots and animations.
- Validating and optimizing designs based on strain-related criteria.

**Displacement :-**

- Create or Import Model: Make your model in SolidWorks or import it.
- Define Material Properties: Assign materials to the model.
- Define Restraints: Fix or constrain parts of the model.
- Apply Loads: Add forces, pressures, or torques.

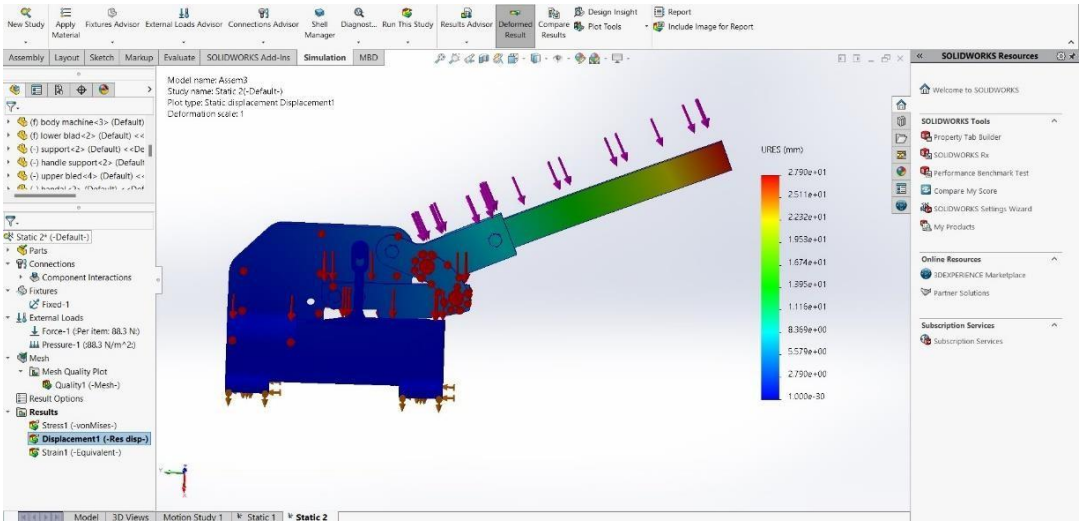


Figure 8.2.4 Displacement in (SW)

- Meshing: Divide the model into smaller elements.
- Run Simulation: Let SolidWorks solve the equations.
- View Results: Analyse displacement and other parameters

## 8.3 Part Convert In STL file Steps :- (Stereolithography )

- Open your Part File: Launch SolidWorks and open the part file you want to convert to an STL.
- Save As STL: Once your part is open, go to File > Save As. In the Save As dialog box, choose "STL (*.stl)" from the "Save as type" drop-down menu.
- Options: After selecting STL, click on the "Options" button. This allows you to adjust the export settings if necessary. You can specify the refinement quality of the STL mesh, which affects the level of detail in the resulting STL file. Higher refinement levels result in larger file sizes but smoother surfaces.

- Save: After adjusting the options, click "OK" to close the options dialog, then choose a location on your computer where you want to save the STL file.
- Name the File: Enter a name for your STL file in the "File name" field.
- Save: Finally, click "Save" to export your SolidWorks part as an STL file

**Convert SLDPRT FILE ⟹ STL FILE**

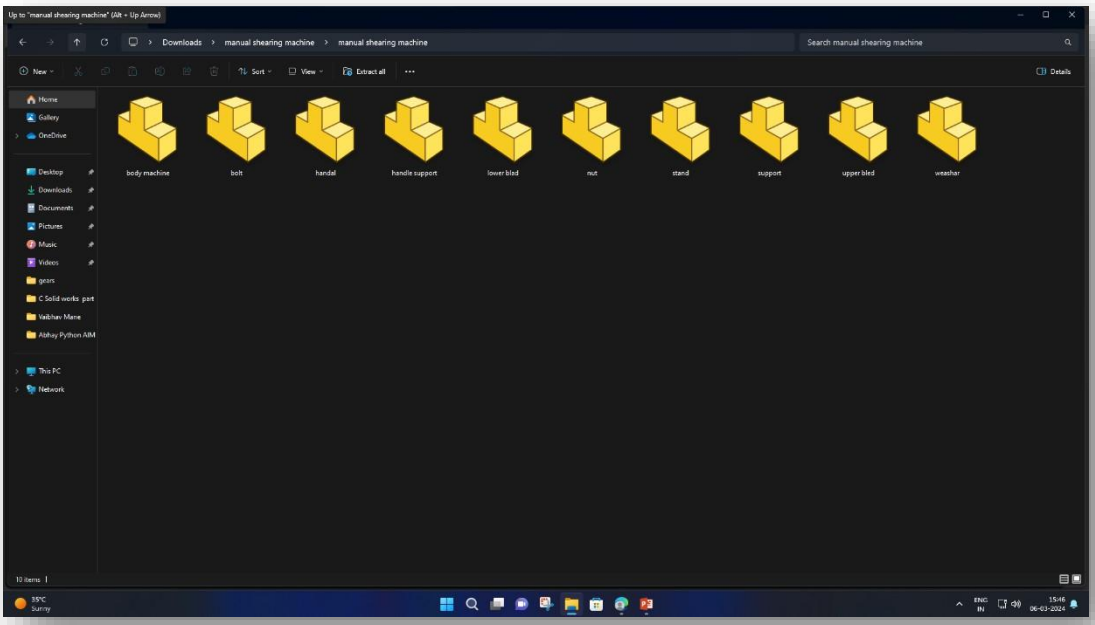


Figure 8.3.1 SLDPRT FILE

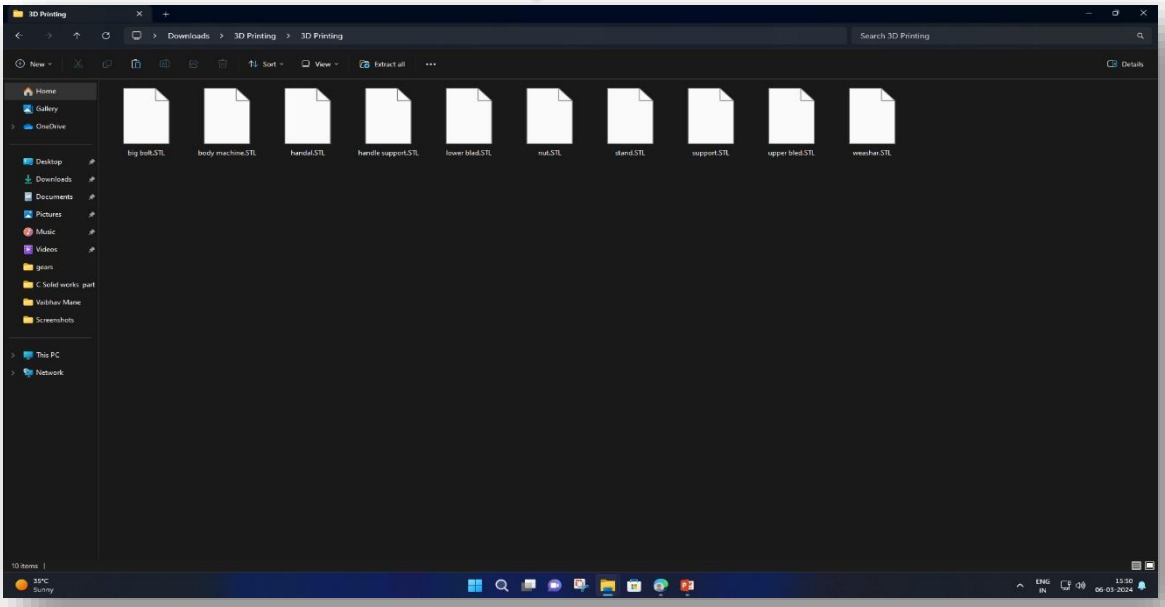


Figure 8.3.2 STL FILE

# CHAPTER-9

## APPLICATION

## 9.1 INDUSTRIAL APPLICATION

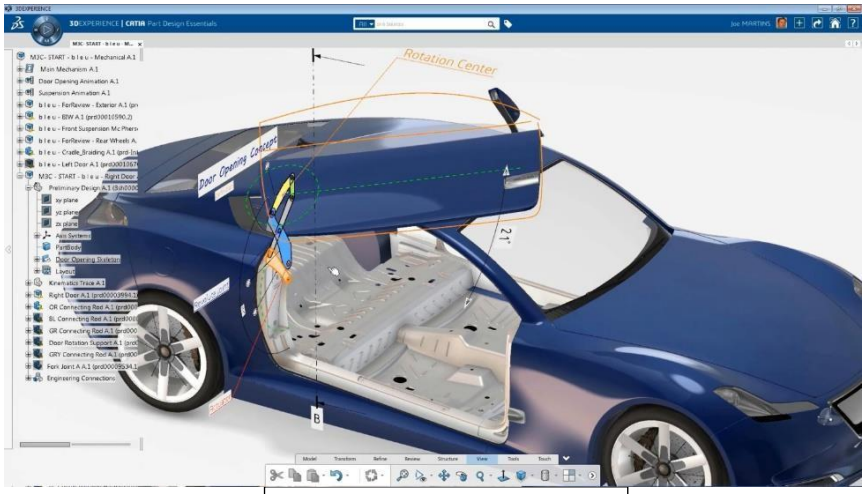


Figure 9.1.1 Printed Car

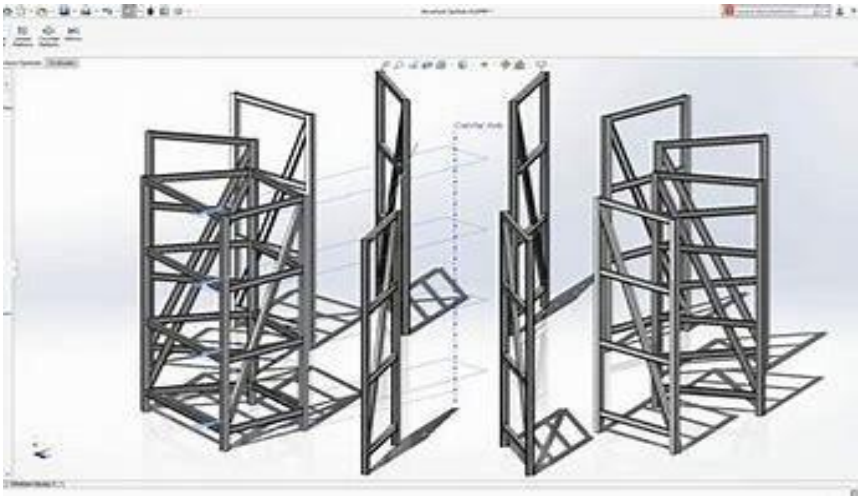

Figure 9.1.2 Building Structure

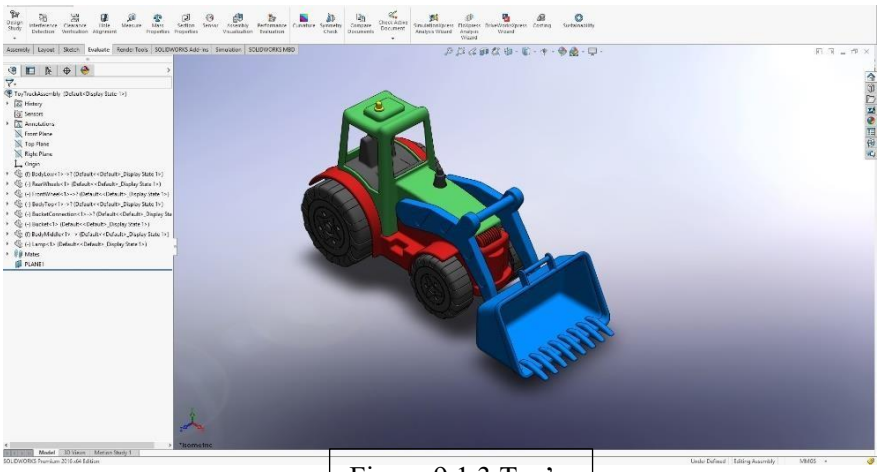

Figure 9.1.3 Toy's

# CHAPTER-10

**CONCLUSION** :-

MY internship at Bharat Forge CoE in Baramati was a rewarding experience where I gained comprehensive insights into 3D printing technologies in manufacturing. Engaging in hands-on projects and collaborating with seasoned professionals deepened my understanding of additive manufacturing processes and their potential impact on efficiency and innovation.

I actively participated in diverse projects, applying theory to practice and refining my skills in design, prototyping, and optimization for additive manufacturing. Working with multidisciplinary teams enriched my problem-solving abilities and highlighted the interdisciplinary nature of 3D printing applications.

Exposure to Bharat Forge CoE's R&D initiatives broadened my outlook on the future of additive manufacturing, especially in automotive and aerospace sectors. Learning about industry best practices and emerging trends underscored the significance of continuous innovation.

Overall, this internship equipped me with valuable skills and knowledge that will undoubtedly shape my academic and professional journey in advanced manufacturing. I'm thankful for the opportunity to contribute to Bharat Forge CoE's innovative endeavors and excited to apply these insights in my future career.