ABSTRACT

This project investigates the development and implementation of an automated dry solar panel cleaning system designed to enhance the efficiency of photovoltaic modules. Over time, solar panels accumulate dust, dirt, and other debris that significantly impede their ability to absorb sunlight, thereby reducing energy output. The primary objective of this project is to design a solar panel cleaner that autonomously maintains the cleanliness of solar modules without using water, ensuring optimal performance and increased electricity production.

The cleaning system utilizes advanced robotics and soft-bristled brushes to effectively remove accumulated debris without damaging the panel surfaces. Key innovations include a completely water-free cleaning mechanism that conserves water resources and a self-powered design leveraging solar energy for its operations.

Field tests conducted across various environmental conditions demonstrate a marked improvement in the efficiency of solar panels post-cleaning. Results indicate that regular automated cleaning can increase energy output by up to 25%, significantly enhancing the overall productivity of solar power installations. This increased efficiency translates to more sustainable and cost-effective energy production, making solar power a more viable option for large-scale energy solutions.

Furthermore, the project explores the economic benefits of implementing such a system, highlighting the reduction in labour costs and the long-term financial savings from increased energy production. The findings suggest that automated dry solar panel cleaners are a valuable investment for solar farms and residential solar systems alike, offering a practical solution to maintaining peak operational performance and supporting the growth of renewable energy infrastructure.

CONTENTS

SR. NO.		CONTENT	PAGE NO.
1		**INTRODUCTION**	**1**
2		**PROBLEM STATEMENT**	**4**
3		**LITERATURE REVIEW**	**6**
4		**PROJECT PLANNING**	**21**
	4.1	Introduction	22
	4.2	Design considerations	22
5		**METHODOLOGY**	**27**
	5.1	**METHODOLOGICAL APPROACH**	**28**
	5.1. 1	Design of solar panel	29
	5.2	**SYSTEM COMPONENTS**	**29**
	5.2.1	**Drive System**	**30**
	5.2.1. 1	Motor selection	30

	5.2.1. 2	Motor selection analysis	32
	5.2. 2	**Power System**	**34**
	5.2. 3	**Controller Selection**	**35**
	1	H-bridge module	35
	2	Relay module	35
	3	Motor driver	36
6		**CONCLUSION**	**37**
7		**REFERENCES**	**40**

LIST OF FIGURE

FIGURE	NAME	PAGE NO
4.1. 1	CAD Design Of Bot	22
4.2. 1	Rail Holding Mechanism	23
4.2. 2	Holding Mechanism	24
4.2. 3	Side Plate Of Cleaning And Rotor Holding Mechanism	24
4.2. 4	Actuator Motion For Movement Of Design	25
4.2. 5	Actuator Mechanism	26
5.2.1. 2.1	Motor	32
5.2.1. 2.2	DC Motor Speed Encoder	33
5.2. 2.1	Battery	34
5.2.3.1	H-Bridge Module	35
5.2.3.2	Relay Module	35
5.2.3.3	Motor Driver	36

LIST OF TABLE

TABLE NO	NAME	PAGE NO
5.2.1. 1.1	Advantages of dc servo motor and stepper motor	30
5.2.1. 1.2	Disadvantages of dc servo motor and stepper motor	31

CHAPTER 1

INTRODUCTION

1. INTRODUCTION

In the ongoing pursuit of sustainable and renewable energy sources, solar power has emerged as a critical alternative to conventional electricity generation methodologies. Traditional power generation predominantly relies on fossil fuels, particularly coal and thermal power plants. These methods not only deplete finite natural resources but also inflict substantial harm on the environment. Specifically, they release significant quantities of greenhouse gases, such as carbon dioxide and methane, into the atmosphere, which exacerbates climate change and contributes to severe air pollution. Consequently, the global transition toward solar energy is a pivotal initiative aimed at reducing reliance on fossil fuels and mitigating the negative ecological impacts associated with traditional energy production.

Solar panels are recognized for their capability to harness the abundant energy provided by the sun, thereby offering a cleaner and more environmentally responsible energy source. However, the efficiency of solar panels may be significantly compromised by the accumulation of dust, dirt, and debris on their surfaces. This accumulation acts as a barrier that inhibits the panels' ability to effectively absorb sunlight, thereby diminishing their potential to convert solar energy into electricity. Research has indicated that unclean solar panels can experience efficiency reductions of up to 25 percent. Such declines in efficiency not only affect immediate energy output but also undermine the long-term effectiveness of solar power systems, which ultimately impacts their contribution to energy sustainability. Therefore, it is essential to implement regular maintenance practices that ensure solar panels operate at peak performance, thereby maximizing energy yield.

Traditional cleaning methods for solar panels often necessitate manual labour and considerable water usage. While these methods can effectively remove dirt and debris, they present several challenges. Manual cleaning is not only labour-intensive and time-consuming but also poses safety concerns, particularly when individuals must access elevated or hard-to-reach areas. Moreover, the reliance on water for cleaning raises sustainability questions, especially in arid regions facing water scarcity. These challenges underscore the necessity for an innovative solution that can effectively maintain solar panel cleanliness without the drawbacks associated with manual labour or excessive water consumption.

To address these critical challenges, this project proposes the development and implementation of an automated dry solar panel cleaning system. The primary objective is to design a sophisticated solution that autonomously removes dust, dirt, and debris from solar panels using advanced robotics and soft-bristled brushes. This innovative system aims to eliminate the need for water entirely, thus promoting environmental sustainability while ensuring efficient cleaning. By maintaining the cleanliness of solar panels, the automated system plays a vital role in significantly enhancing their operational efficiency, which results in increased energy production and a reduction in overall operational costs.

The automated dry solar panel cleaner is designed as a self-powered unit that utilizes solar energy to facilitate its cleaning operations. This feature enhances sustainability and allows for seamless integration with existing solar infrastructure. The system is engineered to operate reliably under various environmental conditions, ensuring consistent and effective performance regardless of external factors such as weather or location. Furthermore, the automated cleaner can be programmed to perform cleaning operations at predetermined intervals, allowing for continuous maintenance of optimal cleanliness and efficiency without the necessity for manual intervention. Preliminary field tests indicate that regular automated cleaning has the potential to increase the energy output of solar panels by as much as 25 percent, further underscoring the system's efficacy in maintaining peak performance and operational productivity.

In conclusion, the automated dry solar panel cleaning system presents a comprehensive, sustainable, and cost-effective solution to the challenges associated with maintaining solar panel efficiency. By ensuring the consistent cleanliness of solar panels, this innovative system supports the broader adoption of solar energy, contributing positively to the development of a greener and more sustainable future. The implementation of such technology may enhance the operational viability of solar energy systems and play a critical role in the global effort to combat climate change and facilitate the transition towards a more sustainable energy landscape.

CHAPTER 2

PROBLEM STATEMENT

2. PROBLEM STATEMENT

2.1 PROBLEM STATEMENT

The presence of airborne particulates settling on solar panels can significantly impact the functioning of the embedded photovoltaic cells. These light-sensitive cells are responsible for converting solar energy into electricity, making it crucial to ensure an ample sunlight source through proper alignment according to the geographic characteristics of the installation site. These particles obstruct the required amount of sunlight, leading to insufficient energy production[2]. Additionally, the hindrance caused by these particles can result in severe damage to the silicon wafers inside. For instance, if dust accumulates and blocks a small area of a cell, it can cause the essential element within the cell to burn, resulting in the appearance of black spots on the panel's surface[3].

The severity of this problem varies from one location to another, depending on the environmental surroundings of the installation sites. Industrial areas may emit various types of particles such as fly ash and brick powder, while areas with low buildings and residential neighbourhoods might face issues with bird droppings[4]. In dry regions like deserts, sand accumulation from frequent sandstorms can cover the panels. This problem can lead to a substantial reduction of 40-50% in energy production within a specific timeframe, depending on the location. Consequently, the overall efficiency of the solar system diminishes, making it challenging to operate and rendering it less effective[5].

CHAPTER 3

LITERATURE REVIEW

3. LITERATURE REVIEW

The global focus on renewable energy has led to the rapid growth of the solar energy industry in recent years. Solar panels are the primary components of solar energy systems, and their efficiency is critical to the success of solar power generation. However, the accumulation of dirt, dust, and other debris on solar panels can significantly reduce their performance by causing shading and hot spots. Manual cleaning methods, such as using water and brushes, are commonly used to clean solar panels. However, manual cleaning can be time consuming, labor-intensive, low efficiency, and potentially dangerous. Automated cleaning technologies, such as solar panel cleaning robots, offer a more efficient and sustainable solution for maintaining the optimal performance of solar panels (Jaiganesh et al., 2022). This literature review aims to explore the existing research on solar panel cleaning robots, their design, functionality, and potential benefits.

The review will analyze the advantages and disadvantages of different types of solar panel cleaning robots, such as mobile robots and fixed robotic arms, and compare their performance to traditional manual cleaning methods. Additionally, the review will examine the different cleaning techniques used by these robots, such as water-based cleaning and dry cleaning, and evaluate their effectiveness. Moreover, the review will analyse the current gaps in the literature and suggest areas for future research to enhance the development of sustainable and efficient solar panel cleaning technologies. This review will provide a foundation for the design and development of solar panel cleaning robots and contribute to the development of a more sustainable and efficient method of solar panel maintenance. 2.2 9 Solar Panel Cleaning Techniques: Current Methods and Challenges There are several methods of solar panel cleaning that are currently being used. Manual labour cleaning, water cleaning, and brush cleaning are three common methods used to clean solar panels. Manual labour cleaning involves wiping off dirt and dust from the surface of the solar panel using a cloth or sponge. Water cleaning, on the other hand, involves spraying water onto the surface of the solar panel to remove loose dirt and debris. Brush cleaning uses a soft bristled brush to scrub the surface of the solar panel, effectively removing stubborn stains and build-up.

The choice of cleaning method will depend on the size of the solar panel, the type and amount of dirt or debris present, and the resources available for cleaning. It is important to follow manufacturer guidelines for cleaning solar panels to avoid damage to the panels or voiding of the warranty. Manual cleaning is a traditional method of cleaning solar panels, which involves using

water, soap, and squeegees to clean the panels. This method is time-consuming and labour-intensive, as workers need to climb onto the roofs of buildings to reach the solar panels. Moreover, it can be hazardous for workers to perform this task, as it involves working at heights and on slippery surfaces (Dewlaney and Hallowell, 2012).

The process is also highly dependent on the skill and experience of the workers, which can lead to inconsistent cleaning results. Therefore, the manual cleaning method has several challenges that need to be addressed to make it more efficient and safer. Another water cleaning method for solar panels is the use of a simple hose and spray nozzle. In this method, clean water is sprayed onto the surface of the panels to remove dirt and debris. This method is relatively easy and inexpensive, and it can be done by anyone with access to a water source. However, the effectiveness of this method can be limited, especially in areas with hard water or high mineral content. Hard water can leave mineral deposits on the solar panels, which can reduce their efficiency (Patil, Bagi and Wagh, 2018b). Additionally, using water that is too hot can cause thermal shock to the panels, leading to damage or reduced efficiency over time. The use of low-pressure water jets is effective in removing dust and debris from solar panels. However, it is important to note that water quality can vary 10 depending on location, and the use of low-quality water for cleaning can lead to mineral deposits and other issues. In general, the water cleaning method can be a cost-effective and efficient way to clean solar panels. However, it is important to consider the quality of the water being used and the potential for mineral deposits to accumulate on the panels. In high-pressure water jets method, high-pressure water is sprayed onto the surface of the solar panels to remove dirt and debris. The pressure of the water can be adjusted to ensure that it does not damage the panels (Syafiq et al., 2018). Compared to manual cleaning, the use of high-pressure water jets is more efficient as it requires less labour and time. However, it is still dependent on the availability of clean water and can be limited in areas with water scarcity. Moreover, if the water used for cleaning is not clean, it can leave mineral deposits on the solar panels, which can reduce their efficiency.

Overall, while the use of high-pressure water jets can be an effective method for cleaning solar panels, it is important to consider the availability and quality of water resources in the area before adopting this method. Deionized water is water that has been purified by removing all minerals and impurities. This method involves spraying deionized water onto the surface of the

solar panels to remove dirt and debris. The advantage of using deionized water is that it does not leave any mineral deposits on the solar panels, which can reduce their efficiency over time. However, the challenge with this method is the availability and cost of deionized water. In addition, it is still important to ensure that the quality of the water used for cleaning is high, as even small amounts of impurities can lead to water marks on the solar panels. Water marks can create shaded areas on the surface of the panels, which can reduce their efficiency. Therefore, while the use of deionized water can be an effective method for cleaning solar panels, it is important to consider the availability and quality of water resources in the area before adopting this method. Brush cleaning is a method of cleaning solar panels using a soft bristled brush to scrub the surface of the panel, removing dirt and debris.

This method is effective at removing stubborn stains and build-up that may not be removed by water cleaning or manual labour cleaning alone. Brush cleaning is particularly useful in areas with hard water, where mineral deposits may 11 accumulate on the surface of the solar panel over time. The advantages of brush cleaning include its ability to remove stubborn stains and build-up, as well as its relatively low cost compared to other cleaning methods. Brush cleaning can also be done without the use of chemicals, making it an environmentally friendly cleaning option. Additionally, brush cleaning can be done with minimal water usage, making it an ideal choice for areas with limited water resources.

However, there are also some disadvantages to brush cleaning. Improper use of the brush can result in scratches or damage to the surface of the solar panel, which can reduce its efficiency over time. Additionally, brush cleaning can be time-consuming, particularly for larger solar panel arrays. To minimise the risk of damage to the solar panel during brush cleaning, it is important to use a soft-bristled brush and to follow manufacturer guidelines for cleaning. It is also recommended to avoid using abrasive cleaners or tools, which can scratch the surface of the solar panel. Self-cleaning coatings are a type of protective coating that can be applied to solar panels to reduce the need for manual cleaning (Syafiq et al., 2022). These coatings are typically made of hydrophobic materials, which repel water and prevent dirt and debris from sticking to the surface of the panel. Some self-cleaning coatings are also designed to break down organic matter, such as bird droppings or pollen, which can further reduce the need for cleaning (Arabatzis et al., 2018).

The advantages of self-cleaning coatings include their ability to reduce the need for manual cleaning, which can save time and resources. Some studies have also shown that self-cleaning coatings can improve the overall energy output of solar panels. However, there are also some disadvantages to self-cleaning coatings. These coatings can be expensive to apply, and their effectiveness may be reduced over time as they are exposed to the elements. Additionally, some self-cleaning coatings may not be suitable for all climates or environmental conditions (Wu et al., 2022). Despite these limitations, self-cleaning coatings are becoming increasingly popular in the solar industry, as they offer a low-maintenance option for keeping solar panels clean and efficient. As research in this area continues, it is likely that new and improved self-cleaning coatings will be developed, further expanding the possibilities for this technology. 2.3 Robotics in Solar Panel Cleaning: State of Art 12 Robotic technology is advancing rapidly and is being applied to various industries, including the solar energy industry. The use of robotic systems for solar panel cleaning is gaining popularity due to its potential to improve the efficiency and effectiveness of solar panel cleaning operations. The state of the art in robotics for solar panel cleaning involves the development and deployment of autonomous cleaning robots that can identify and clean solar panels without human intervention.

These robots are equipped with advanced sensors, algorithms, and control systems that allow them to navigate complex terrain and clean solar panels with precision and accuracy (Kumar et al., 2018). Several companies had already developed and deployed robotic systems for solar panel cleaning. For example, Ecoppia, a company based in Israel, has developed a water-free cleaning robot that uses advanced technology to clean solar panels in a fast, efficient, and cost-effective manner (Ecoppia, 2023). Similarly, Indian start-up, Skilancer Solar, has developed a robotic system that can clean solar panels on a large scale using a combination of brush cleaning and water-based cleaning methods. However, despite the advances made in robotics for solar panel cleaning, there are still some limitations and challenges that need to be addressed. For example, the high cost of these robotic systems and the need for skilled technicians to operate them may limit their widespread adoption. Additionally, there may be concerns around the safety and reliability of these systems, especially when operating in harsh environmental conditions.

There may also be opportunities for the integration of artificial intelligence and machine learning techniques to improve the efficiency and accuracy of solar panel cleaning robots (Mir et

al., 2020). Overall, the state of the art in robotics for solar panel cleaning is rapidly evolving, and there is significant potential for further development and innovation in this area. By addressing the limitations and challenges of current systems, and leveraging emerging technologies and techniques, the efficiency and effectiveness of solar panel cleaning operations can be improved, 13 ultimately leading to increased energy production and a more sustainable future. These robots use air flow and the aid of microfibres pads or rolling brushes to remove dirt and debris from the surface of the panels. When moving across the panel's surface, the combination of air flow and the operation of rolling brush direct the dust and debris to a specific direction. This means that they do not generate any wastewater or require any additional resources to clean the panels. Additionally, they are suitable for cleaning solar panels located in areas where water is scarce or expensive, such as desert regions or remote locations (Fan et al., 2022).

Water-free cleaning robots are generally quicker and more efficient than manual cleaning methods as they do not require any additional setup or clean-up time. However, the effectiveness of water-free cleaning robots may be limited when it comes to heavily soiled panels or stubborn debris such as bird droppings. In these cases, water-based cleaning methods may be more effective. Water-free cleaning robots may also not be as effective at removing stubborn debris such as bird droppings or tree sap, which can require more aggressive cleaning methods. 2.4.2 Solar Brush Robots Solar brush robots are a type of cleaning robot used for cleaning solar panels. They typically use a rotating brush to scrub the surface of the panels and remove dirt and debris. These robots are generally smaller and less expensive than other types of solar panel cleaning robots, making them a popular choice for many applications. One of the main advantages of solar brush robots is their affordability.

These robots are generally less expensive than other types of cleaning robots, 14 making them accessible to many people. They are also easy to operate, as they typically only require a power source and a water supply to function. Solar brush robots are generally effective at removing debris from the surface of the solar panels, as the rotating brush can scrub the surface and remove dirt and grime. They are typically lightweight and portable, making them easy to transport and use in a variety of applications (Noh et al., 2020). However, solar brush robots also have some disadvantages. One of the main limitations is their effectiveness on very dirty panels. In some cases, the brushes may not be able to remove all debris from the surface of the panels, requiring

additional cleaning methods. Solar brush robots may not be suitable for use in areas with high wind or other adverse weather conditions, as the brushes may not be able to effectively clean the panels in these conditions.

There is a risk of damage to the solar panels if the brushes are not properly calibrated, which could lead to scratching or other damage. Cleaning Robot with Brush and Water Robotic systems that use a combination of brush cleaning and water-based cleaning methods are a type of solar panel cleaning robot that uses rotating brushes to scrub the surface of the panels and water to rinse away any dirt or debris (Ronnaronglit and Maneerat, 2019). The water is typically supplied by a tank on the robot or through a hose connected to an external water source. The brush cleaning method is effective for removing stubborn debris such as bird droppings or tree sap, while the water-based cleaning method ensures a thorough and complete cleaning of the panels. One of the main advantages of robotic systems that use a combination of brush cleaning and water-based cleaning methods is their effectiveness in cleaning heavily soiled panels. The combination of brush and water-based cleaning can remove even the most stubborn debris. These systems are generally faster and more efficient than manual cleaning methods as they do not require any additional setup or clean-up time. Robotic cleaning systems that use water-based methods can help conserve water by using a closed-loop system that recycles and filters the water, reducing the amount of water needed 15 for cleaning.

These systems are suitable for cleaning solar panels located in areas with access to water, such as urban or suburban areas. One of the main limitations of robotic systems that use water-based cleaning methods is the potential for water damage to the electrical components of the solar panels. Careful consideration must be given to the amount of water used and the pressure at which it is applied to the panels. Robotic cleaning systems that use water-based methods can be more expensive than other types of solar panel cleaning robots due to the additional equipment required for water storage and filtration. These systems may not be suitable for cleaning solar panels located in areas with limited access to water or in water scarce regions. The brushes used by these robotic cleaning systems may need to be replaced frequently to maintain their effectiveness, which can be an additional cost. In conclusion, robotic systems that use a combination of brush cleaning and water-based cleaning methods are effective in cleaning heavily soiled solar panels. They are generally faster and more efficient than manual cleaning methods and can help conserve water.

However, careful consideration must be given to avoid potential water damage to the electrical components of the solar panels, and these systems may not be suitable for all locations due to water availability and cost considerations.

The brushes used by these systems may also need frequent replacement, which can be an additional cost. The system is controlled by a computer program, which directs the robotic arm to move along the surface of the panels and clean them using the brushes and nozzles. It was found that these systems are effective at removing debris from solar panels due to the use of brushes and nozzles. One of the main advantages of robotic arm-based cleaning systems is their versatility. The robotic arm can be programmed to clean solar panels of various shapes and sizes, making them suitable for use in a wide range of 16 applications. These systems are also faster and more efficient than manual cleaning methods, as they do not require any additional setup or clean-up time (Gupta, 2022). Additionally, robotic arm-based cleaning systems are typically more effective at removing debris than other types of cleaning robots due to the use of brushes and nozzles. They are also suitable for cleaning solar panels located in areas with limited access, as they do not require a source of water to operate. These systems can be more expensive than other types of solar panel cleaning robots due to the complexity of the robotic arm and the computer programming required to control it. Another limitation is that robotic arm-based cleaning systems may not be suitable for use in areas with high wind or other adverse weather conditions, as the robotic arm may be damaged or may not be able to clean the panels effectively in these conditions. Additionally, the brushes used by these systems may need to be replaced frequently to maintain their effectiveness, which can be an additional cost.

There is also a potential risk of damage to the solar panels if the brushes or nozzles are not properly calibrated, which could lead to scratching or other damage. In summary, robotic arm-based cleaning systems have several advantages, including their versatility, efficiency, and effectiveness at removing debris. However, they also have some limitations, such as high cost and potential damage to the solar panels if not calibrated correctly. Overall, these systems may be a suitable option for cleaning solar panels in various applications, but careful consideration of the specific needs and requirements of the system is necessary before implementation. 2.5 Control Systems and Sensors for Solar Panel Cleaning Robots The control system and sensors are crucial components of solar panel cleaning robots that ensure efficient and safe operation. The control

system manages the movement and cleaning mechanism of the robot, while sensors detect and avoid obstacles, prevent collisions, and ensure accurate navigation. Various studies have explored different approaches to the control system and sensor design for solar panel cleaning robots. The easiest and most common way to develop a control system for a robot is using a microcontroller. The two most popular microcontrollers used for robot prototype development are the Arduino and the Raspberry Pi.

The application of microcontrollers is important for the initial stage of robot development. For a simple solar panel cleaning robot, an Arduino Uno is already enough to handle all the operations of the robots (Noh et al., 2020). The prototype proposed by Noh et al. (2020) consists of the wheel motors, water pump, cleaning brush, and ultrasonic sensor as outputs and inputs components. The Arduino Uno used in the project is powerful enough to handle all the outputs and inputs by the hardware components. The next solution to the control system is the programmable logic controller (PLC). PLC offers a high level of reliability and durability, which makes them well-suited to be used in industrial applications. Furthermore, the application of PLC programming on the solar panel cleaning robot could increase the flexibility and scalability of the robot. Modifications or updates to the programming could be done easily. In the solar panel cleaning mechanism proposed by Hou et al (2016), he appreciates the high reliability and compact structure of PLC control. He claims that the PLC programming is easy to master and has already applied in vast amounts of engineering fields (Hou et al., 2016). However, PLC control is not suitable for applications that require complex decision-making. The application that requires a complex decision making process will cause the PLC program to be very complex which is not desirable. In the initial stage of a robot development, the control system will focus on the control and proper calibration of the hardware, so a microcontroller which serves to process the electrical and electronic signals will be enough. After the development of the basic operations, the proceeding stage of developing the smart detection system requires a more powerful processing unit to perform either image processing or recognition algorithms. The smart detection system allows the solar panel cleaning robot to be fully automated and intelligent. The 2 control systems mentioned above achieve automatic cleaning by routine program. The cleaning process depends more on the feedback by the sensors.

The intelligent detection system allows the solar panel cleaning robot to make decisions by itself. To declare a totally smart 18 automatic robot, the solar panel cleaning robot must be able to recognize solar panels, identify dirt and be able to understand its location on the site. Currently, there are smart solar panels recognition systems used to recognize the location of solar panels through machine vision (Yao and Hu, 2017). As the robot recognizes the solar panels, the development of the smart system could continue in dirt identification. Image processing and machine vision are the most advanced and reliable solutions to achieve dirt identification. A simpler method to achieve dirt identification is the Arduino collar recognition proposed by Olorunfemi et al. (2023). Lastly, the robot must know its position at the solar panels site so that it could decide its movement to complete the whole cleaning operation by itself. By gathering these skills, an artificial intelligence solar panel cleaning robot could be achieved. In summary, the control system and sensors are essential components of solar panel cleaning robots that ensure efficient and safe operation. Three common methods to construct a control system are discussed which are the microcontroller method, PLC programming method, and artificial intelligence method.

All these methods are useful depending on the requirements and expectations on the robot. The microcontroller method is simple and easy to achieve. The PLC programming method is fast and useful for low-complexity applications. The artificial intelligence method could be the final goal in robot development. 2.6 Design Considerations for Solar Panel Cleaning Robots The design considerations for a solar panel cleaning robot are crucial in ensuring that the robot can effectively clean the solar panels while minimising the risk of damage to the solar panels. The following are some key design considerations that must be considered in designing a solar panel cleaning robot. Figure 2.1 shows the summary of the design considerations of a solar panel cleaning robot. One of the primary considerations in designing a solar panel cleaning robot is the cleaning mechanism. The cleaning mechanism should be able to remove dirt, dust, and debris from the surface of the solar panel without causing any damage. The use of different cleaning mechanisms, such as brushes, wipers, or air blowers, can be explored based on the type of solar 19 panel and the type of debris to be removed. Different cleaning mechanisms may have different levels of effectiveness and may impact the surface of the solar panel differently. Thus, the suitable cleaning mechanism should be chosen based on the context such as the location of the solar panels site and the type of soiling. Next, mobility is also an important consideration in the design of a solar panel cleaning

robot. The robot must have the mobility to move around the surface of the panel, move up and down, as well as side to side, to clean the entire surface effectively.

The robot should also be able to navigate around obstructions, such as wiring or mounting brackets, and handle changes in the slope of the panel. Furthermore, the power supply is another critical consideration in the design of a solar panel cleaning robot. The robot should be able to operate for an extended period without needing to be recharged or refuelled. Solar powered robots are an option, but they may not be suitable for cleaning panels in areas with limited sunlight or shaded areas. For a battery powered robot, the battery life will be a crucial factor on the operating time of the robot. For a large-scale solar panel farm, a battery powered cleaning robot may not be a wise selection. A battery powered cleaning robot could only operate within a small range. Therefore, the best power supply method will be the direct electricity power supply through the wiring method. The wire handling method should be considered to avoid distractions to the mobility of the robot. Moreover, the control system is essential for ensuring that the robot can effectively clean the panels. The control system should be able to guide the robot around the panel and adjust the cleaning mechanism as needed to clean the surface effectively. The control system should also be able to monitor the robot's performance and detect any issues that may arise. Different solutions of the control systems could be selected based on the requirements. The most advanced solutions will be the artificial intelligence method. However, even the artificial intelligence method requires the basic signal transmission between the processing unit and the hardware components.

Thus, the control system should be constructed from the basic operations, and enhanced gradually to achieve the final goal, which is the smart system. 20 Lastly, Safety is a crucial consideration in the design and operation of solar panel cleaning robots, especially given their proximity to electrical equipment. To minimise the risk of accidents, the robot must be equipped with sensors that can detect obstacles and prevent collisions with the solar panel or other equipment. The design should also ensure that the robot cannot damage the solar panel or fall off it during operation. In addition, it is vital to handle the use of water in the cleaning process carefully to avoid any contact with the electronic circuits, which could damage the robot or, worse still, cause a fire hazard due to a short-circuit condition. Therefore, proper insulation and waterproofing measures must be implemented to ensure the robot's safety and prevent any potential hazards. In

summary, the design considerations for a solar panel cleaning robot include the cleaning mechanism, mobility, power supply, control system, and safety. By considering these factors, designers can create effective and safe solar panel cleaning robots. the summary of the design considerations of a solar panel cleaning robot. Design Considerations of Solar Panel Cleaning Robot. 2.7 21 Power and Energy Management of Solar Panel Cleaning Robots the power and energy management of solar panel cleaning robots is a crucial aspect of their design, as they need to operate for extended periods without requiring frequent recharging or refueling.

These robots typically use a combination of renewable and non-renewable energy sources, including solar panels, batteries, and fuel cells, to power their operation. The design of the power and energy management system for a solar panel cleaning robot involves selecting the appropriate energy sources, optimizing energy efficiency, and managing energy consumption to ensure the robot's long-term operation. Figure 2.2 shows the summary of the power and energy management of the solar panel cleaning robot. One of the key factors to consider when designing the power and energy management system for a solar panel cleaning robot is the type of energy source to use. Solar panels are an obvious choice for powering these robots, as they can harness energy from the sun and store it in batteries for later use. However, solar panels may not be suitable for areas with limited sunlight or shaded areas. In such cases, other energy sources such as batteries or fuel cells may be used to supplement or replace the solar panels. Another critical aspect of power and energy management for solar panel cleaning robots is optimizing energy efficiency. Energy-efficient design is necessary to minimize energy consumption and maximize the robot's operating time. This involves using energy-efficient components, reducing weight and size, and minimizing power losses in the system. Next, managing energy consumption is also crucial to ensure the robot's long-term operation. Energy management systems must monitor the robot's energy consumption and adjust energy sources accordingly to prevent the batteries from running out of charge.

This involves implementing intelligent energy management systems that optimize the use of renewable and non-renewable energy sources, such as solar panels and batteries. Moreover, the selection of energy storage systems is also essential to the power and energy management of solar panel cleaning robots. Batteries are a common energy storage system used in these robots, as they can store energy from renewable sources such as solar panels and provide power when needed. However, batteries have limited capacity, which can limit the robot's operating 22 time. Fuel cells

can provide longer operating times as they convert chemical energy directly into electrical energy. In summary, the power and energy management of solar panel cleaning robots involve selecting the appropriate energy sources, optimizing energy efficiency, managing energy consumption, and selecting suitable energy storage systems. By considering these factors, designers can create efficient and sustainable solar panel cleaning robots that can operate for extended periods without requiring frequent recharging or refueling. The summary of the power and energy management of the solar panel cleaning robot. Power and Energy Management of Solar Panel Cleaning Robot. 2.8 23 Environmental Impact and Sustainability of Solar Panel Cleaning Robots

The use of solar energy has increased in recent years due to the need for clean and renewable energy sources. However, the maintenance of solar panels remains a challenge. Over time, solar panels can get dirty, reducing energy efficiency. As a solution, the use of solar panel cleaning robots has become increasingly popular. Although these robots can improve the efficiency of solar panels, it is important to consider their environmental impact and sustainability. One major environmental impact to consider is the energy required to manufacture and operate the robots. The manufacturing process of solar panel cleaning robots requires significant energy, which contributes to greenhouse gas emissions. In addition, the operation of the robot requires electricity, which may be generated from non-renewable sources.

These factors should be considered when assessing the overall carbon footprint of the robot. Another significant impact to consider is the potential for water waste. Most solar panel cleaning robots use water to clean the panels, and if not properly managed, the use of large amounts of water can lead to water scarcity and contamination. However, there are innovative solutions to minimize water waste, such as the use of recycled water and the development of water-saving cleaning technologies. Sustainability is another important aspect to consider when evaluating the overall impact of solar panel cleaning robots. The sustainability of a robot can be evaluated based on its durability, recyclability, and end-of-life management. It was found that some robots have a short lifespan due to their electronic and mechanical components wearing out quickly. This can lead to a significant amount of waste and increased environmental impact. To improve sustainability, robots should be designed with materials that can be easily recycled, and the end-of-life management of the robots should be carefully planned. In addition to the manufacturing and operation of the robots, the transportation of the robots should also be considered.

Transportation emissions can contribute to the carbon footprint of the robot. To minimize the 24 transportation impact, robots can be designed to be easily assembled on site, reducing the need for transportation. In conclusion, solar panel cleaning robots have the potential to improve the efficiency of solar panels, but their environmental impact and sustainability should be carefully considered. To minimise negative impacts, it is important to use renewable energy sources to power them, minimise water waste, and design them with recyclable materials.

These considerations will contribute to the development of a sustainable solar energy ecosystem. 2.9 Comparative Analysis of Solar Panel Cleaning Robots Solar panel cleaning robots have become increasingly popular in recent years as they provide an efficient and cost-effective way to maintain and clean solar panels. There are many different types of solar panel cleaning robots available, each with its own unique features and benefits. The comparative analysis of some of the most popular solar panel cleaning robots is done. Table 2.1 shows the summary of the solar panel cleaning robots mentioned in the paragraphs. Firstly, the Ecoppia E4 robot is a fully autonomous, water-free cleaning system that uses a combination of microfiber and airflow to clean solar panels (Ecoppia, 2023). It is powered by solar energy and is designed to work in harsh weather conditions. The robot can clean up to 10,000 solar panels per day and has a cleaning efficiency of up to 99%. It also has a low power consumption rate and can operate in extreme temperatures, making it an ideal solution for large-scale solar panel installations. The SolarBrush robot is a waterless cleaning system designed for solar panel maintenance (Robotics Business Review, 2013). It utilises a rotating brush to remove dust, debris, and other particles from solar panels. With its high cleaning efficiency, the SolarBrush robot can clean up to 1,200 solar panels per day.

The robot is compact and lightweight, making it easy to transport and move around solar installations. Additionally, the Solar Brush robot is equipped with an autonomous navigation system that allows it to move around solar panels and obstacles without human intervention. It is also powered by solar panels, making it a sustainable and environmentally friendly solution for solar panel maintenance. 25 In addition, the SunBrush Mobil is a robotic system designed for cleaning solar panels without the use of water (SunBrush Mobil, 2023). It utilises a rotating brush system to effectively remove dust, dirt, and other debris from solar panels. With its high cleaning efficiency, the SunBrush Mobil can clean up to 200 panels per hour. The system is mounted on a

vehicle, making it easy to transport and shift around large solar installations. Additionally, the SunBrush Mobil has a low power consumption and can operate in extreme temperatures, making it a reliable and efficient option for solar panel maintenance. Lastly, the Helios Hexacopter is a drone designed specifically for the cleaning and maintenance of solar panels (Coxworth, 2022). Its water-based cleaning system utilises a combination of spray and brush technology to effectively remove dust, dirt, and other debris from solar panels. The Helios Hexacopter is powered by a rechargeable battery, making it a more sustainable option compared to traditional cleaning methods. With a cleaning efficiency of up to 95%, the Helios Hexacopter can clean up to 100 panels per hour at heights of up to 50 meters, making it a versatile option for large-scale solar installations. Additionally, the Helios Hexacopter is designed with a portable and compact frame, allowing for easy transportation and deployment to various locations. The drone can also be equipped with additional sensors and cameras for panel inspection and maintenance, making it a comprehensive solution for solar panel cleaning and upkeep. In conclusion, there are many different types of solar panel cleaning robots available, each with its own unique features and benefits. When choosing a solar panel cleaning robot, it is important to consider factors such as cleaning efficiency, power consumption rate, and the ability to operate in extreme temperatures.

CHAPTER 4

PROJECT PLANNING

4. PROJECT PLANNING

4.1 INTRODUCTION

In this chapter, the methodology and work plan done of the project is presented in detail. The solar panel cleaning robot consisted of two parts, which are the moving frame and cleaning robot. The moving frame carries the cleaning robot while the cleaning robot cleans the solar panels. The overall project can be divided into 3 sections, mainly the mechanical structure, the electrical and electronic circuit systems, and the software systems.

The methodology sections will present the design of the mechanical structure, circuit systems, and the flow chart of the Arduino codes. Besides, the hardware used to construct the prototype will be listed down in this chapter. Lastly, the work plan section will present the project milestones and the Gantt Chart of the project.

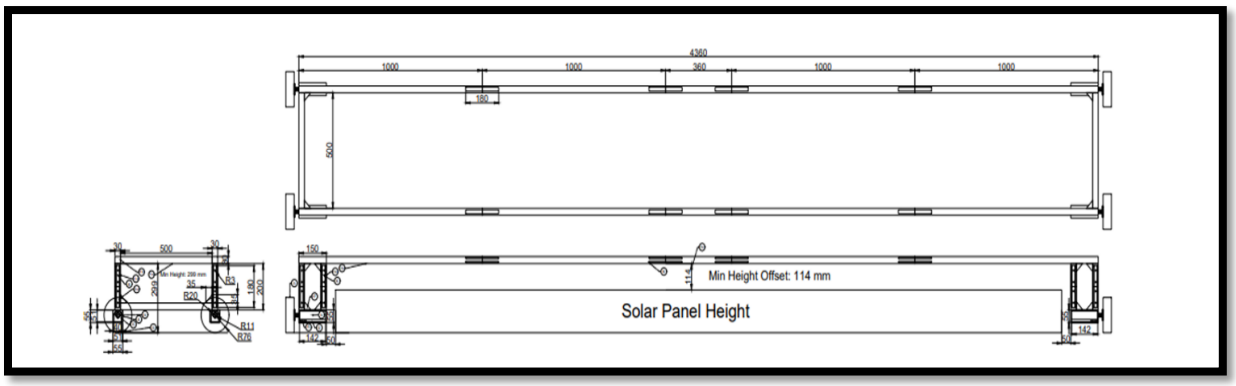

Fig: 4.1. 1. CAD Design of bot

4.2 DESIGN CONSIDERATIONS

In this project, the cleaning robot targets industrial rooftop solar panels. The solar panels will be arranged into groups or arrays. The recent common practice of solar panels installation suggested that a pathway should be reserved between the solar panel arrays for future services and maintenance. It is recommended to maintain a clearance around the entire solar panel array and establish a pathway between the rows to ensure safe and easy maintenance (Renewable Energy Laboratory et al., 2018). Normally, the industrial rooftop solar panels will suffer from the bird drops, dust, and watermarks issues. Therefore, the solar panels cleaning robot should be able to get rid of the stubborn and aggressive form of soiling, especially the bird drops. The targeted solar panels site utilises array-arrangement. There will be gaps among the arrays. It would be an issue

for the robot to move across the gap to the next array. Therefore, the robot was designed to avoid direct contact of robot wheels on the surface of the solar panels, instead a moving rail is designed for the cleaning robot. For the robot to move across the solar panels during cleaning operations, rails should be prepared for the robot so that the robot could move all over the solar panels, at the same time the wheels do not have contact with the surface of the solar panels.

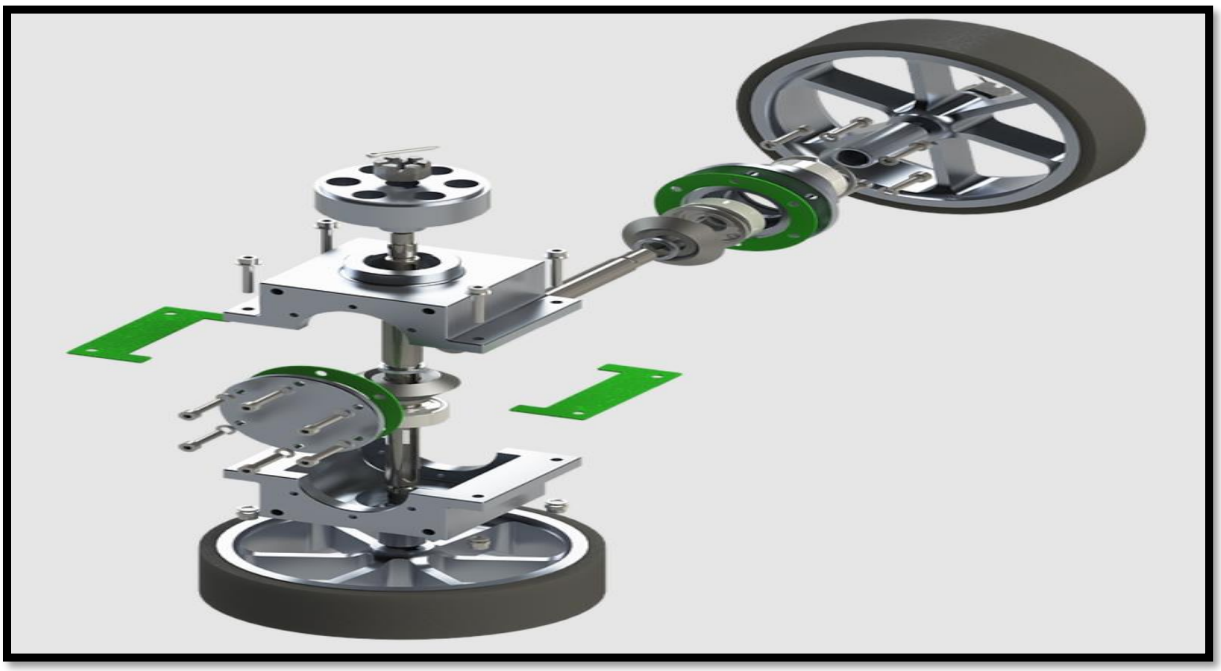

Fig: 4.2. 1. Rail holding mechanism

The solar panels cleaning robot consists of two main parts which are the moving frame and cleaning robot. The moving frame, serving as the rail, carries the cleaning robot to the desired location, while the cleaning robot performs the cleaning tasks. Next, the solar panels are installed with specific tilting angles. The moving frame was designed to be horizontal for the cleaning robot to move back and forth on the moving frame.

To deal with the tilting angles of the solar panels, linear actuators are used. Linear actuators hold the cleaning brush, so that the cleaning brush could move downwards to clean low-level position. Lastly, a high-speed rotating brush will be used in the robot to remove stubborn dirt, especially bird drops and water marks. Next, a pair of linear actuators will be used to hold the

cleaning brush so that they could bring the cleaning brush to a lower position for solar panels installed with tilting angle.

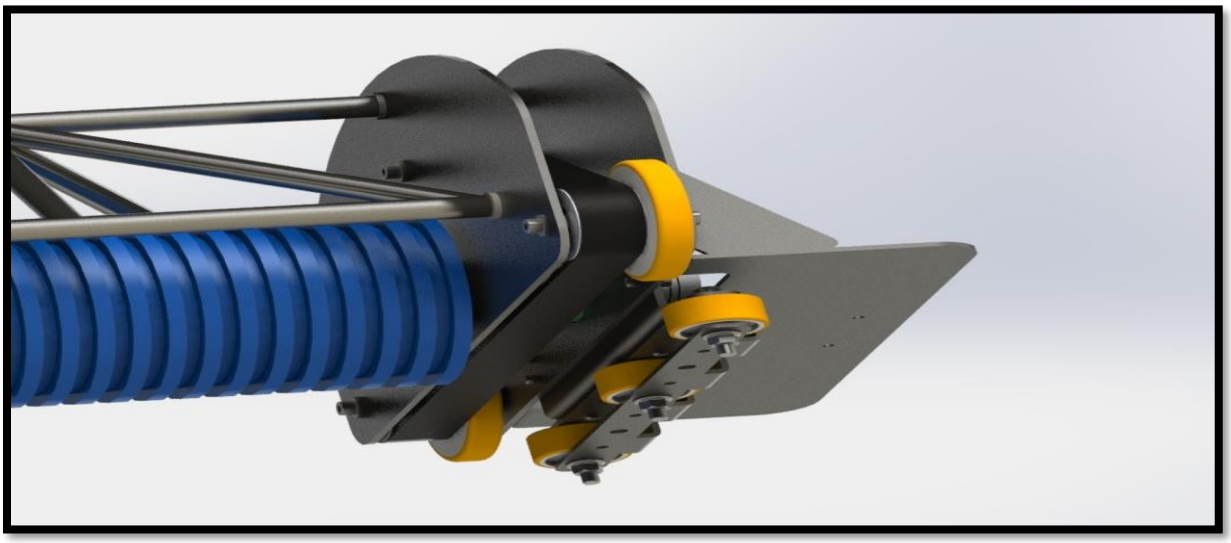

Fig: 4.2. 2. Holding mechanism

Problems Solutions Gaps among solar panel arrays. Moving Frame carries the cleaning robot. Direct contact of robot on the solar panel surface. Moving Frame carries the cleaning robot. Tilting angle installation of solar panel. Linear actuator holds the cleaning brush. High-speed rotating brush with water sprayer. The first stage of the project started with the mechanical

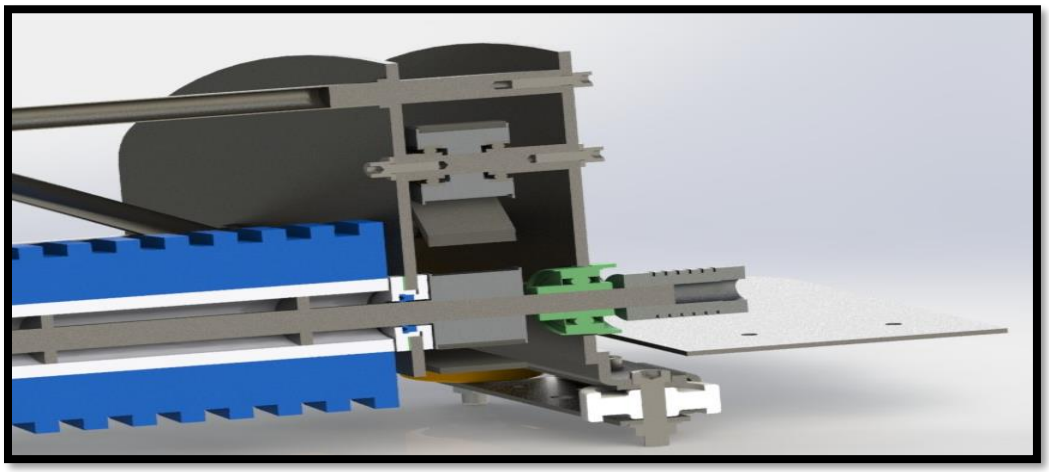

Fig: 4.2. 3. Side plate of Cleaning and rotor holding mechanism

structure design. The mechanical structure design was done in AutoCAD software. Figure 4.2. 3 shows the complete design of the solar panel cleaning robot. The solar panel cleaning robot consists of two parts which are the moving frame and cleaning robot. The moving frame serves as

a track for the cleaning robot. The cleaning robot moves on top of the moving frame to perform the cleaning operation.

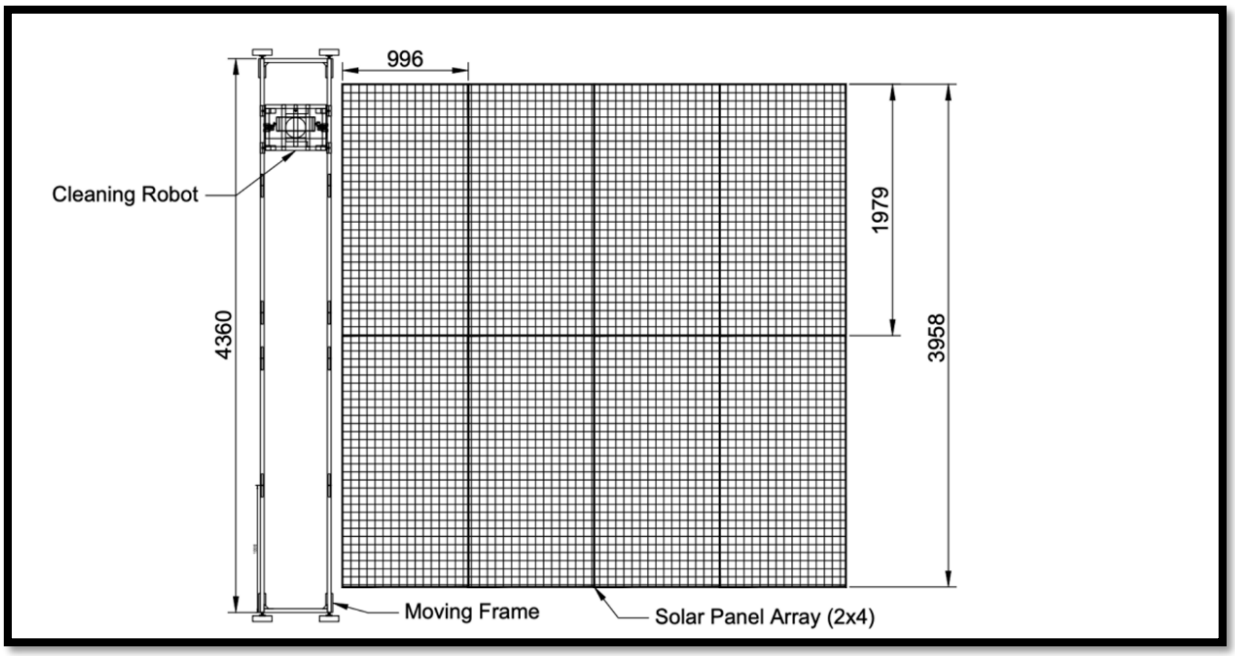

Fig 4.2. 4. Actuator Motion for movement of design

The mechanical structure designs were drawn as shown in the figures below. The full-size figures will be inserted in the appendices if the details of the design are needed for study purposes.

All the drawings were drawn in the initial design stage. After constructing the real hardware, there would be modifications done on the prototype. The drawings serve as a guide to determine the materials and components required for the prototype. The second stage of the project was the electrical and electronic circuits design. It was decided to use electrical supply from the socket to power up the robot. Therefore, the circuit design would consider the 240 V AC power supply. The overall project consists of two products, which are the moving frame and the cleaning robot. The electronic circuits design was based on the processing unit. From the power supply, there would be two wires connected parallelly to two different switching power supplies to convert 240 V AC to 24 V DC. The switching power supplies were chosen to provide 24 V DC due to the reason that all the motors used for the wheel applications required 24V. For the ESP-8266, 7-12 V DC is required to provide optimum operating voltage to them. It could be noticed that there are

two buck converters used to power up the ESPs. They step down the voltage from 24V DC to 12V DC.

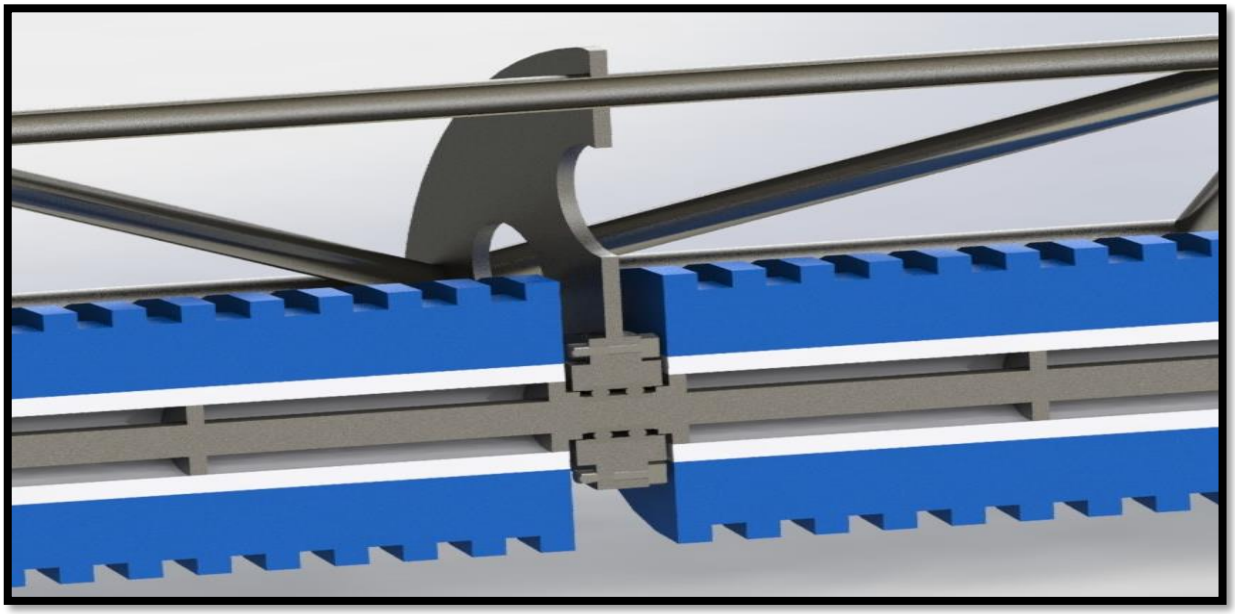

Fig 4.2. 5. Actuator Mechanism

CHAPTER 5

METHODOLOGY

5. METHODOLOGY

5.1. METHODOLOGICAL APPROACH

The foundational pillars of the methodology included Data Accumulation and Analysis, Design, Simulation and Analysis, Optimization, and Experimental Testing. Design considerations were applied after analyzing the data from primary and secondary sources, encompassing both quantitative and qualitative aspects. A CAD model was created, taking into account all the necessary parameters resulting from the data analysis.

Subsequently, Simulation, Analysis, and Optimization were performed for the entire design structure and individually for the major components. A series of experiments was accompanied to appraise the performance of that system.

In future, Simulation, Analysis, and Optimization will be carried out for the overall design structure and major components. A set of experiments will be conducted to assess the functionality of the cleaning system.9 Depending on the experimental feedback, if the results are to be positive and as expected, a scale down model will be manufactured at the same college in the Mechanical engineering department. If the outcomes deviate from expectations, a review of the design, analysis, and optimization is to be conducted to address the noted aspects for redesign.

Upon successful completion of the scale-down prototype, efforts will be directed towards making it user- friendly through the development of a mobile app and ensuring ease of assembly and disassembly.

These specifications are evaluated under STC conditions, which include 1000 W/m2 of irradiance, AM 1.5 spectrum, and the cell temperature is 25°C. For the Simulation, the Solar panels situated on the terrace of same college mentioned above were f irst designed. Exact measurements were taken on-site, and based on those measurements, rough 2D figures were created. Using CATIA V5 software, these 2D figures were subsequently transformed into a 3D design. Given that the Solar panel arrangement comprises 60 panels, only a few were designed.

5.1. 1. DESIGN OF SOLAR PANEL

To gain insights into the challenges faced by the company, a comprehensive analysis of the solar panel's location was conducted, emphasizing the significance of its positioning. The solar panel at PDEA's College of Engineering, Manjari, is manufactured by WAAREE and belongs to the WS-330 module. Its electrical characteristics under Standard Test Conditions (STC) are as follows.

• Nominal Maximum Power (Pm): 330 W

• Circuit Voltage: 46.70 Volt

• Short Circuit Current: 9.25 Amp.

• Voltage at Max. Power: 37.95 Volt.

• Current at Max. Power: 8.70 Amp.

• Max. Voltage: 1500 Volt DC

• Maximum Series Fuse Rating: 15 Amp.

• L x W x T: 1960 x 990 x 40 dimensions in mm.

• Weight: 22.50 kg

5.2. SYSTEM COMPONENTS

Each chapter should begin with an introduction that tells what you will cover in the chapter. It should tell the reader what is in the chapter as well as its importance to the overall thesis/report. This introduction should occur directly below the chapter heading and does not require its own header.

5.2. 1. DRIVE SYSTEMS

5.2.1. 1. Motor Selection

For the robot, there are two possible motors choice, each one have advantages and disadvantages as shown in the tables below.

DC SERVO MOTOR ADVANTAGES	STEPPER MOTOR ADVANTAGES
High output power relative to motor size and weight.	Stable. Can drive a wide range of frictional and inertial loads.
Encoder determines accuracy and resolution.	Needs no feedback. The motor is also the position transducer.
High efficiency. It can approach 90% at light loads.	Inexpensive relative to other motion control systems.
High torque to inertia ratio. It can rapidly accelerate loads.	Standardized frame size and performance.
Has "reserve" power. 2-3 times continuous power for short periods.	Plug and play. Easy to setup and use.
Has "reserve" torque. 5-10 times rated torque for short periods.	Safe. If anything breaks, the motor stops
Motor stays cool. Current draw proportional to load.	Long life. Bearings are the only wear- out mechanism.
Usable high-speed torque. Maintains rated torque to 90% of NL RPM	Excellent low speed torque. Can drive many loads without gearing.
Audibly quiet at high speeds	Excellent repeatability. Returns to the same location accurately.
Resonance and vibration free operation.	Overload safe. Motor cannot be damaged by mechanical overload.

Tab: 5.2.1. 1.1 Advantages of DC servo motor and Stepper motor

DC SERVO MOTOR DISADVANTAGES	STEPPER MOTOR DISADVANTAGES
Requires tuning to stabilize feedback loop.	Low efficiency. Motor draws substantial power regardless of load.
Motor runs away when something breaks. Safety circuits are required.	Torque drops rapidly with speed (torque is the inverse of speed).
Complex. Requires encoder.	Low accuracy. 1:200 at full load, 1:2000 at light loads.
Brush wear out limits life to 2,000 hrs. Service is then required.	Prone to resonances. Requires micro stepping to move smoothly.
Peak torque is limited to a 1% duty cycle.	No feedback to indicate missed steps.
Motor can be damaged by sustained overload.	Low torque to inertia ratio. Cannot accelerate loads very rapidly.
Bewildering choice of motors, encoders, and servo drives.	Motor gets very hot in high performance configurations.
Power supply current 10 times average to use peak torque.	Motor will not "pick up" after momentary overload.
Motor develops peak power at higher speeds. Gearing often required.	Motor is audibly very noisy at moderate to high speeds.
Poor motor cooling. Ventilated motors are easily contaminated.	Low output power for size and weight.

Tab: 5.2.1. 1.2. Disadvantages of DC servo motor and Stepper motor

A stepper motor would have a couple advantages in terms of controllability over a DC motor; each step has a defined angular rotation. In addition, it can deliver a lot of torque at low speeds and have reasonable currents at stall torque, so it would be the reasonable option.

However, for making the robot be a product that is easy to install, the motors are preferably built into the robot.

For the brushes, a motor with a high speed and a low torque is the best choice, since that the brushes are light and cleaning process needs high speed.

5.2.1. 2. Motor Selection analysis

Summation of forces = 0

Fmotor-fload=0

Fm-fload Fm=mg=2*9.81=19.62n Torque-fm X r=19.62*0.03=0.5886n, m

We chose motor with 0.6nm and speed of 95rev/min to maintain the horizontal movement in 1 sec

Distance severed per 1 revolutin of motor number of revolutions/60 = 2*3.14*0.03*95/60=0.298m/sec

Speed desired = 30 cm/sec

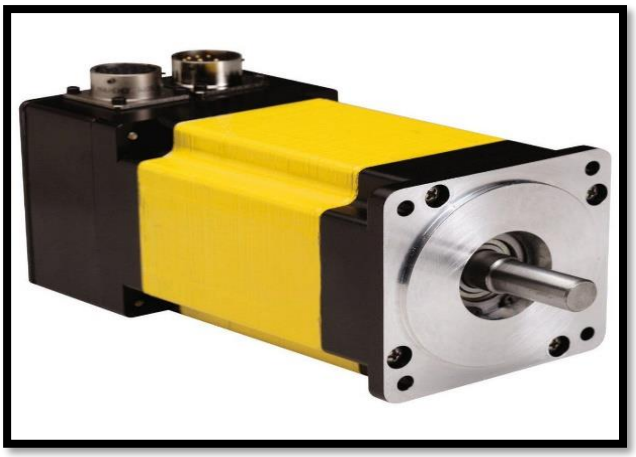

Fig: 5.2.1. 2.1. Motor

Description:

DC motor with right angled drive reduction gerbox and rubber tyred wheel. This unit is ideal for robot or toy vehicle construction. Ideal for Arduino and other development systems.Light weight plastic construction gearboxmetal motor rated at 3-6VDC and soft rubber tyre.

Wheel can fit to the left or right of the gearbox and motor can be run in both forward and reverse directions.

Voltage: 3-6VDC

Current: 80-150mA

No Load Speed: 3V-125 rev/min 5V-200 rev/min 6V-230 rev/min

Load Speed: 3V-95 rev/min 5V-160 rev/min 6V-175 rev/min

Output Torque: 3V-0.8kg.cm 5V-1.0kg.cm 6V-1.1kg.cm

Wheel Diameter: 65mm including tyre

Wheel Width: 25mm

Gearbox/Motor Dimensions: 20mm x 22mm x 65mm

Weight: 50grams

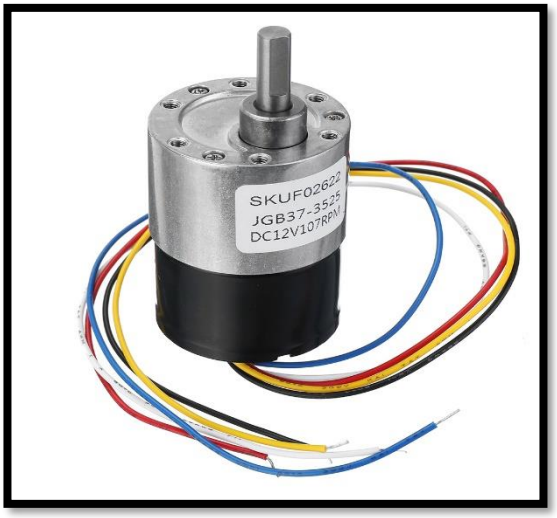

Fig: 5.2.1. 2.2. DC motor speed encoder

DC motor with speed encoder code disk 41 lines

Voltages	Load current	Speed
5v	60mA	1600rpm
12v	80mA	4300rpm
24v	120mA	8600rpm

Encoder grid: 41 lines

5.2. 2. POWER SYSTEM

Since the motor Selected were a DC motor, since the high-speed motor needs 24 volts to operate at its rated speed and the other motor needs 12 volts, two 12 volts batteries are needed. So we use battery array.

Fig: 5.2. 2.1. Battery

Specifications:

Voltage: 12 volts/cell

Amperage: 8Ah

5.2. 3.CONTROLLER SELECTION

1. H- Bridge module

An H-bridge shown in figure (5.2) is an electronic circuit that enables a voltage to be applied across a load in either direction. These circuits are often used in robotics and other applications to allow DC motors to run forwards and backwards. One H-Bridge can drive two motors.

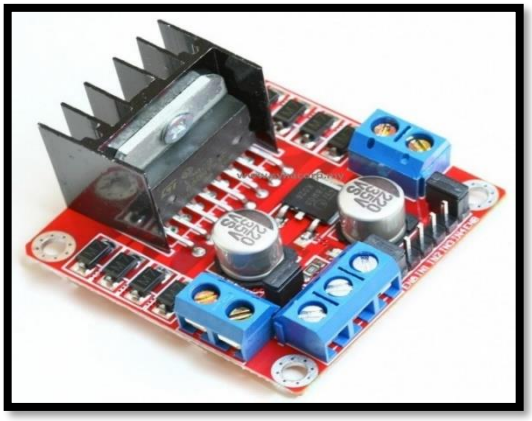

Fig: 5.2.3.1. H-Bridge module

2. Relay module

The module is uses SRD relay module, as shown in figure (5.3), to control high voltage electrical devices. (Maximum 250V). It can be used in interactive projects and can be used to control the lighting, electrical motors and other equipment. It can be controlled directly by a wide range of microcontrollers and can be controlled through the digital 10 port, such as solenoid valves,

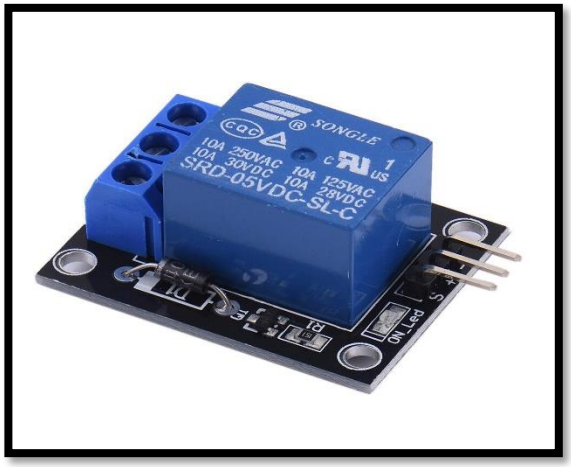

Fig: 5.2.3.2. Relay Module

lamps, motors and other high current or high voltage devices. Choosing this relay was enough since that the brush motor needs to operate

3. Motor driver

A motor driver IC is an integrated circuit chip that controls motors in autonomous robots and embedded circuits. L293D and ULN2003 are the most commonly used motor Driver IC that is used in simple robots and RC cars. A motor driver is unquestionably something that causes the motor to move in accordance with the given instructions or inputs (high and low). It listens to the low voltage from the controller/processor and controls an actual motor that needs high input voltage A motor driver IC, in simple terms, controls the direction of the motor based on the commands or instructions received from the controlfer. Many motor drivers follow different topologies, in this article, we will focus on the popular H-bridge topology which is used in the L293D motor driver IC.

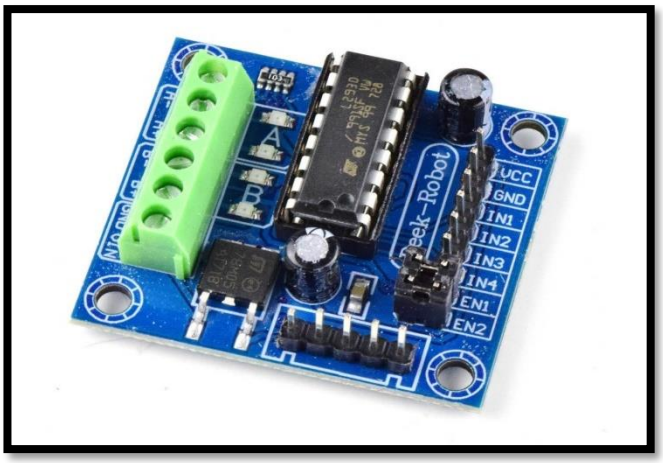

Fig: 5.2.3.3. Motor Driver

A motor is an electronic device that helps convert electrical energy into mechanical energy- Therefore, a motor driver enables you to perform automatic tasks using electrical power. We have several types of electric motors. These types include the DC motors, the stepper motors, and the Servo motors. These motors are distinguished by their operating principles and characteristics. Choosing the correct type of motor driver is essential because it allows your engine to work efficiently with the microcontroller of your choice. This article will help you understand how the motor driver works, the characteristics, types, etc.

CHAPTER 6

CONCLUSION

6. CONCLUSION

The development of a waterless solar panel cleaner robot marks a significant leap forward in the maintenance and efficiency of solar energy systems. This project is particularly useful in addressing the challenges associated with traditional cleaning methods, which often rely heavily on water and manual labor. By offering a sustainable, cost-effective, and efficient solution, this robot enhances the overall performance and viability of solar energy installations.

Usefulness of the Project:

The waterless solar panel cleaner robot brings several advantages:

- Environmental Sustainability: Traditional cleaning methods for solar panels typically require large amounts of water, which can be a scarce resource in many regions. By eliminating the need for water, this robot conserves water resources and reduces the environmental footprint of solar energy systems.
- Cost Efficiency: The robot reduces the need for manual labor and water, leading to significant cost savings. This makes solar energy more affordable and accessible, particularly in areas where water is expensive or scarce.
- Enhanced Performance: Dust and debris can significantly reduce the efficiency of solar panels. Regular and effective cleaning by the robot ensures that the panels operate at their maximum potential, leading to higher energy output and reliability.

Scalability:

The robot is designed to be versatile and can be used in various settings, from small residential solar installations to large-scale solar farms. This adaptability makes it a valuable tool for a wide range of applications.

- How It Works: The waterless solar panel cleaner robot employs advanced technologies to ensure effective cleaning without the use of water:
- Brushes and Air Blowers: The robot uses soft brushes and powerful air blowers to remove dust and debris from the surface of the solar panels. These components are designed to clean thoroughly without causing any damage to the panels.

- Automated Navigation: Equipped with sensors and artificial intelligence algorithms, the robot can autonomously navigate across the solar panel array. It maps out the area and ensures that every part of the panel is cleaned efficiently.
- Energy Efficiency: The robot is powered by solar energy, making it a sustainable solution that aligns with the principles of renewable energy. It operates independently, harnessing the power of the sun to keep the panels clean.

In conclusion, the waterless solar panel cleaner robot is a groundbreaking innovation that significantly enhances the efficiency and sustainability of solar energy systems. Its ability to provide regular, effective cleaning without the use of water makes it an invaluable asset in the renewable energy sector. By improving the performance and reducing the maintenance costs of solar panels, this robot contributes to the broader adoption and success of solar energy worldwide.

CHAPTER 7

REFERENCES

7. REFERENCES

[1]. Enhancing the efficiency of rooftop solar photovoltaic panel with simple cleaning mechanism https://www.researchgate.net/publication/352702450_Enhancing_the_efficiency_of_rooftop_solar_photovoltaic_panel_with_simple_cleaning_mechanism

[2]. Patil, P. & Bagi, Jaydeep & Wagh, Mahesh & Patil, G.. (2019). Design Optimization, Automation and Testing Analysis of Dust Cleaning Mechanism for Solar Photovoltaic Power Plant: Volume 1. 10.1007/978-981-13-2697-4_32.

[3]. P. A. Patil, J. S. Bagi and M. M. Wagh, "A review on cleaning mechanism of solar photovoltaic panel," 2017 International Conference on Energy, Communication, Data Analytics and Soft Computing (ICECDS), Chennai, India, 2017, pp. 250-256, doi: 10.1109/ICECDS.2017.8389895. keywords: {Cleaning;Robots;Solar panels;Brushes;Batteries;Solar panel cleaning;Automated solar cleaning},

[4]. Syafiq, Amirul & Pandey, Dr. A. & Nor Adzman, Noriah & Abd Rahim, Nasrudin. (2018). Advances in approaches and methods for self-cleaning of solar photovoltaic panels. Solar Energy. 162. 10.1016/j.solener.2017.12.023.

[5]. Amirul Syafiq, Vengadaesvaran Balakrishnan, Mohd Syukri Ali, Sanjay J Dhoble, Nasrudin Abd Rahim, Azimah Omar, Ab Halim Abu Bakar, Application of transparent self-cleaning coating for photovoltaic panel: a review, Current Opinion in Chemical Engineering, Volume 36,

[6]. Ioannis Arabatzis, Nadia Todorova, Ioanna Fasaki, Chrysovalanti Tsesmeli, Antonis Peppas, Wen Xin Li, Zhiwei Zhao, Photocatalytic, self-cleaning, antireflective coating for photovoltaic panels: Characterization and monitoring in real conditions, Solar Energy, Volume 159, 2018, Pages 251-259, ISSN 0038-092X, https://doi.org/10.1016/j.solener.2017.10.088 .

[7]. https://www.ecoppia.com/

[8]. Siyuan Fan, Wenshuo Liang, Gong Wang, Yanhui Zhang, Shengxian Cao, A novel water-free cleaning robot for dust removal from distributed photovoltaic (PV) in water-scarce areas, Solar Energy, Volume 241, 2022, Pages 553-563, ISSN 0038-092X, https://doi.org/10.1016/j.solener.2022.06.024. (https://www.sciencedirect.com/science/article/pii/S0038092X22004509)

[9]. Noh, Faridah Hanim Mohd et al. “Development of solar panel cleaning robot using Arduino.” *Indonesian Journal of Electrical Engineering and Computer Science* (2020)

[10]. N. Ronnaronglit and N. Maneerat, "A Cleaning Robot for Solar Panels," *2019 5th International Conference on Engineering, Applied Sciences and Technology (ICEAST)*, Luang Prabang, Laos, 2019, pp. 1-4, doi: 10.1109/ICEAST.2019.8802521. keywords: {Solar Panel;Cleaning Robot;RobotA CLEANING ROBOT FOR SOLAR PANELS}

[11]. Vinay Gupta, Madhu Sharma, Rupendra Pachauri, K N Dinesh Babu, Design and development of self-cleaning PV sliding system, *Clean Energy*, Volume 6, Issue 3, June 2022, Pages 392–403, https://doi.org/10.1093/ce/zkac015

[12]. https://www.greenleaprobotics.com/lotus-a