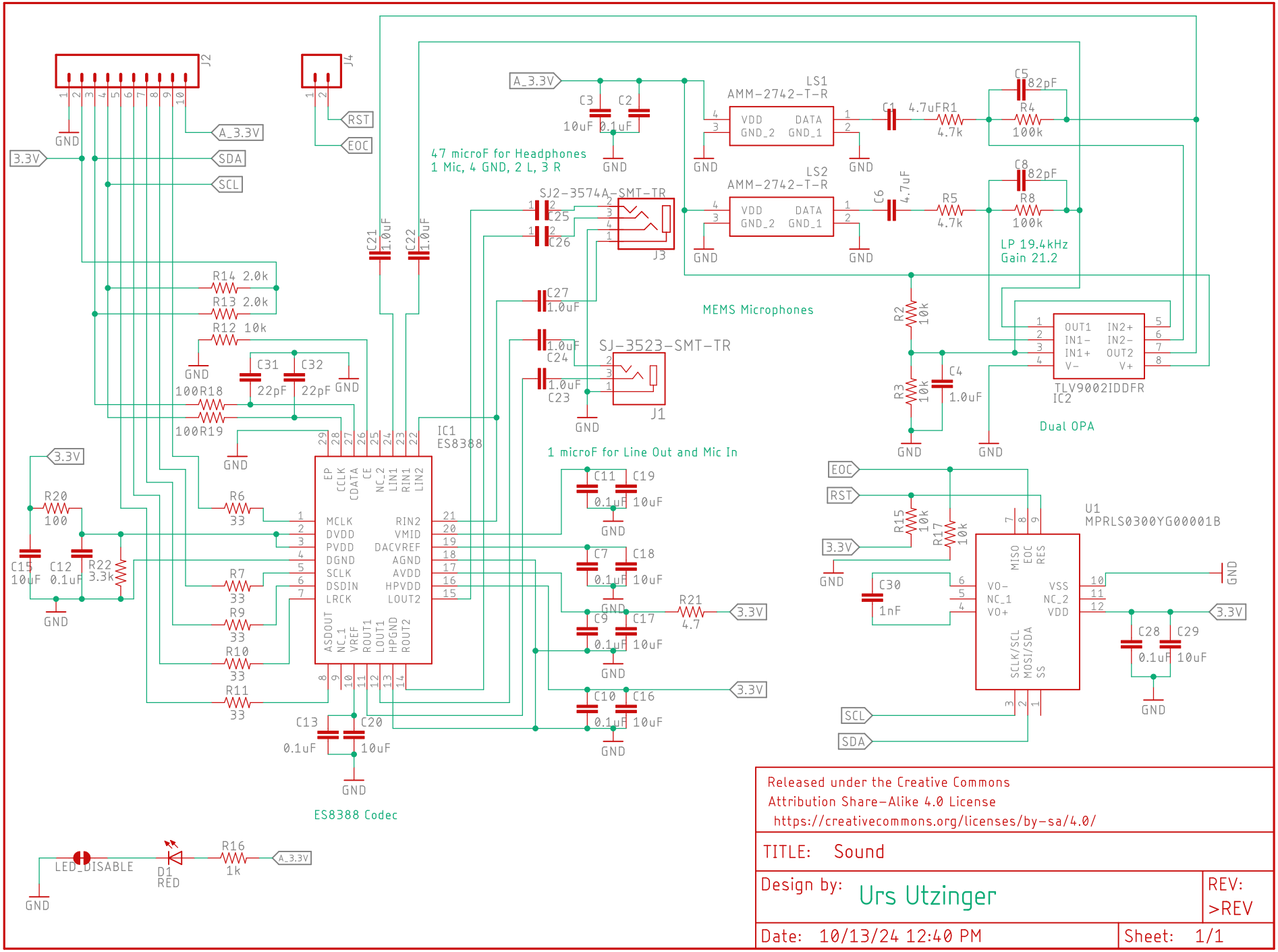

Released under the Creative Commons
Attribution Share-Alike 4.0 License
https://creativecommons.org/licenses/by-sa/4.0/

TITLE: Sound

Design by: Urs Utzinger

REV: >REV

Date: 10/13/24 12:40 PM

Sheet: 1/1