2 Electrode ECG & Respiration:
DRVP-ECGP
DRVN-ECGN
BIN-ECGN
BIP-ECGP

1.8V to AVDD and DVDD
3.3V to OVDD

4 Electrode ECG & Respiration:
BIN-ECGN
BIP-ECGP

ECG , R-to-T, BioZ Signals:
DRVP-BIP
DRVN-BIN
RBP and RBN
EN_UNBAL and EP_UNBAL and EC_UNBAL

Galvanic Skin Response:
DRVN-BIN
DRVP-BIP
125, 250 or 500Hz
220nF blocking filter on DRVP/N

BIOZ with 100Ohm Test:
RBN-RBP
DRVP-BIP
DRVN-BIN

Default BioZ Frequency:
FMSTR/64 = 500Hz
To measure 100 Ohm:
increase frequency or change internal lower filter cut off.

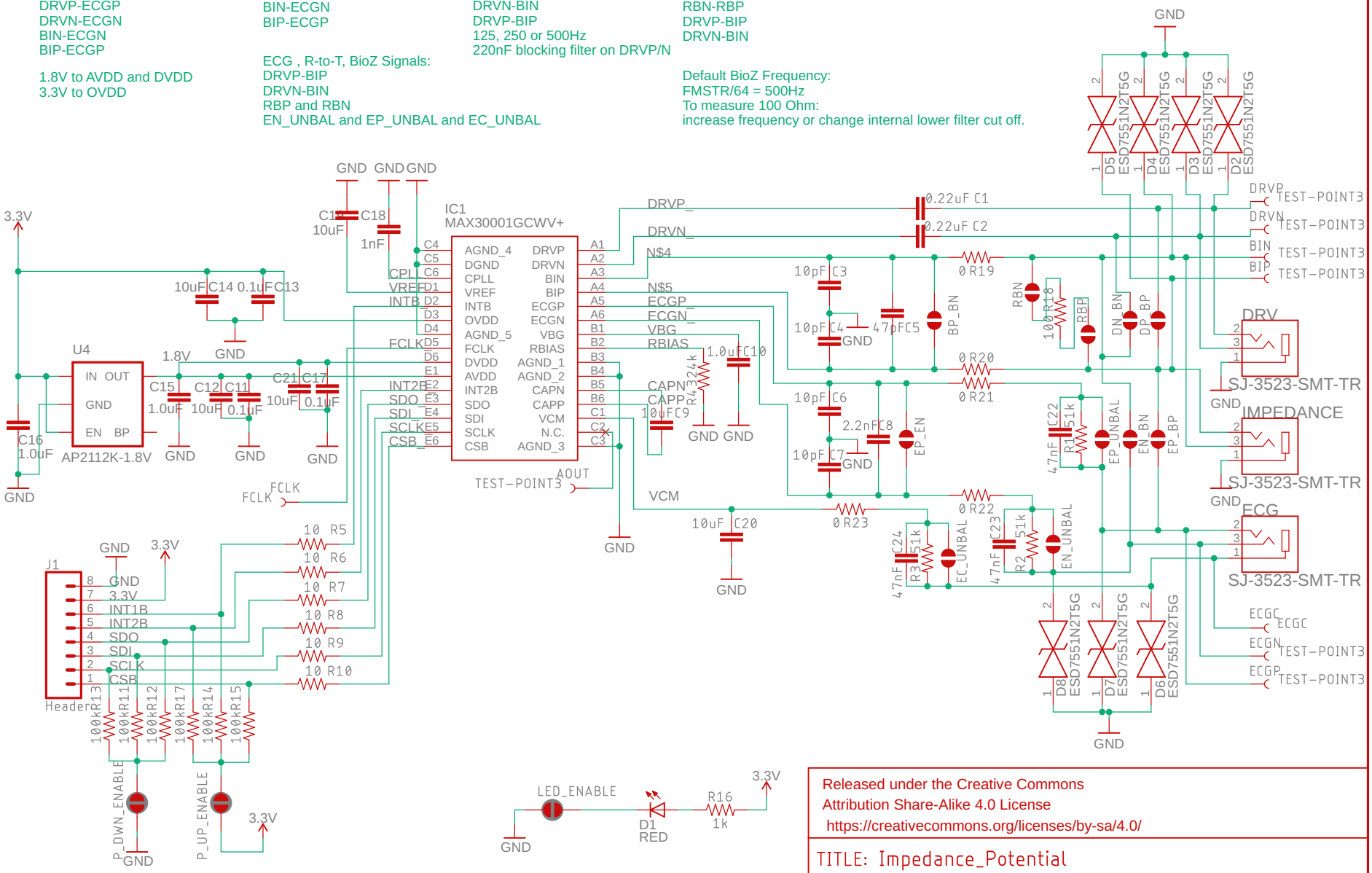

Released under the Creative Commons
Attribution Share-Alike 4.0 License
https://creativecommons.org/licenses/by-sa/4.0/

TITLE: Impedance_Potential

Design by: Urs Utzinger

REV:

Date: 2/23/2024 6:28 AM

Sheet: 1/1