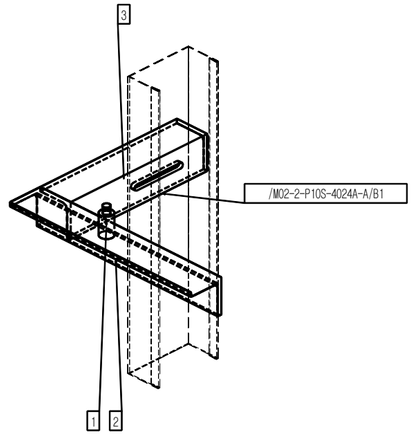

ISO

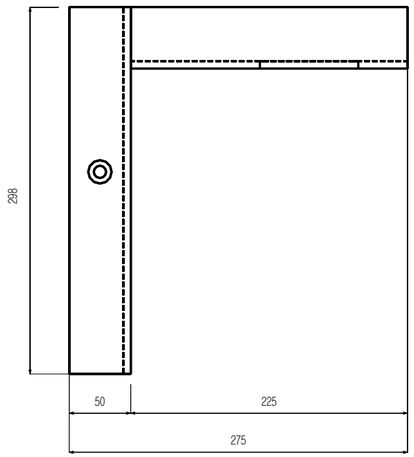

LOOKING '-Z'

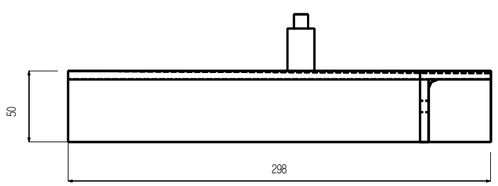

LOOKING '-X'

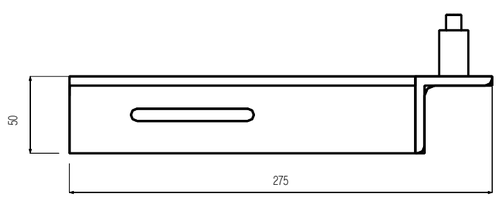

LOOKING '-Y'

N

BILL OF MATERIAL

No.	ITEM	MATERIAL	SIZE	Q'TY	T/W	MA	FA
1	EA	SS275	50x50x6x298.25	1	1.39	L	F
2	EA	SS275	50x50x6x298.25	1	1.39	L	F
3	EA	SS275	50x50x6x225	1	1.00	L	F

REV.	DATE	DESCRIPTION	DRAWN	CHECKED	APPROVED
PAINT CODE			DP No.		
EX2			Test		

CLIENT

Client Test Image

CEDAR FLNG

SN2688

CONTRACTOR

SAMSUNG 삼성중공업

제작도

TAG NO.