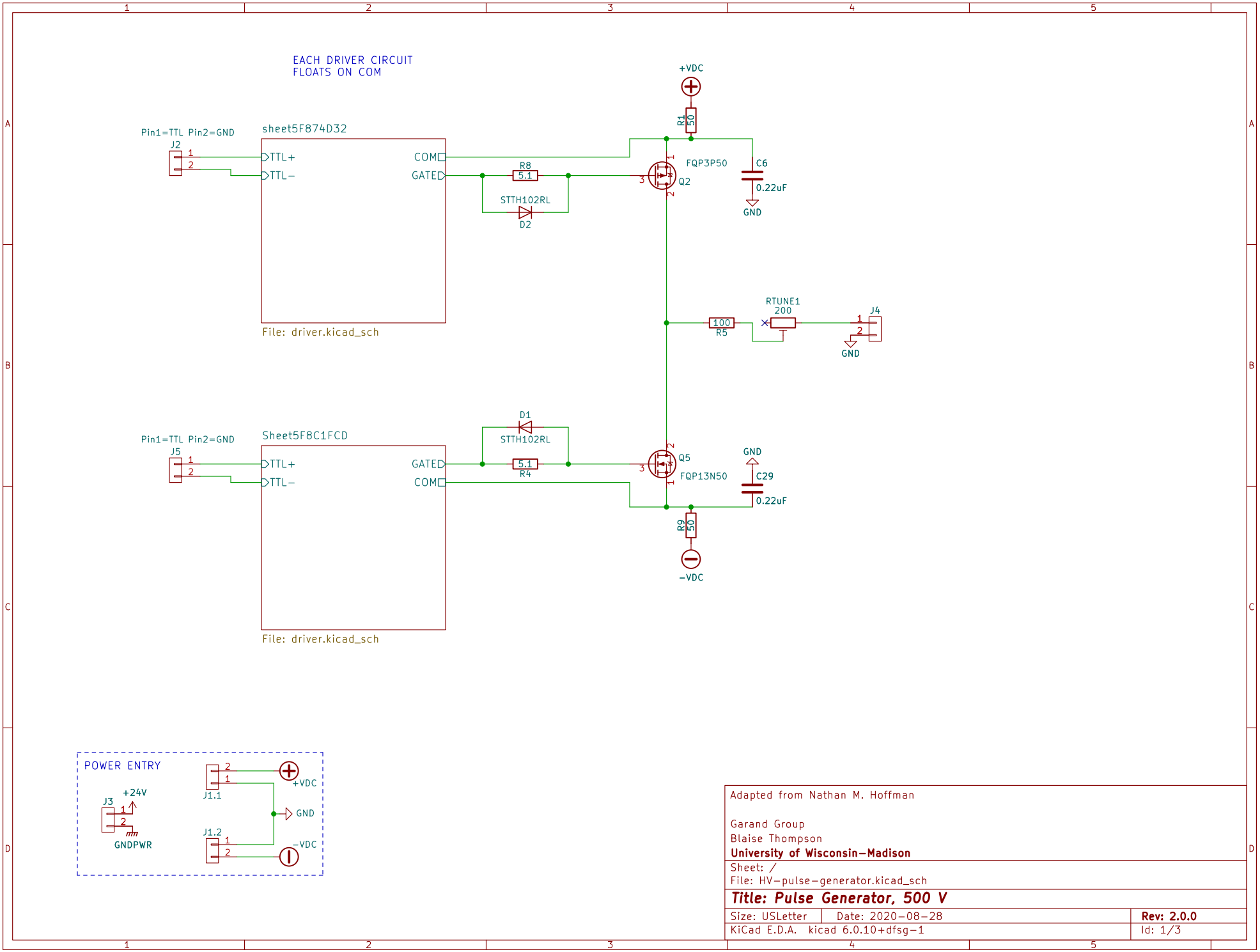

Adapted from Nathan M. Hoffman

Garand Group
Blaise Thompson
University of Wisconsin−Madison

Sheet: /
File: HV−pulse−generator.kicad_sch

Title: Pulse Generator, 500 V

Size: USLetter	Date: 2020−08−28	**Rev: 2.0.0**
KiCad E.D.A. kicad 6.0.10+dfsg−1		Id: 1/3

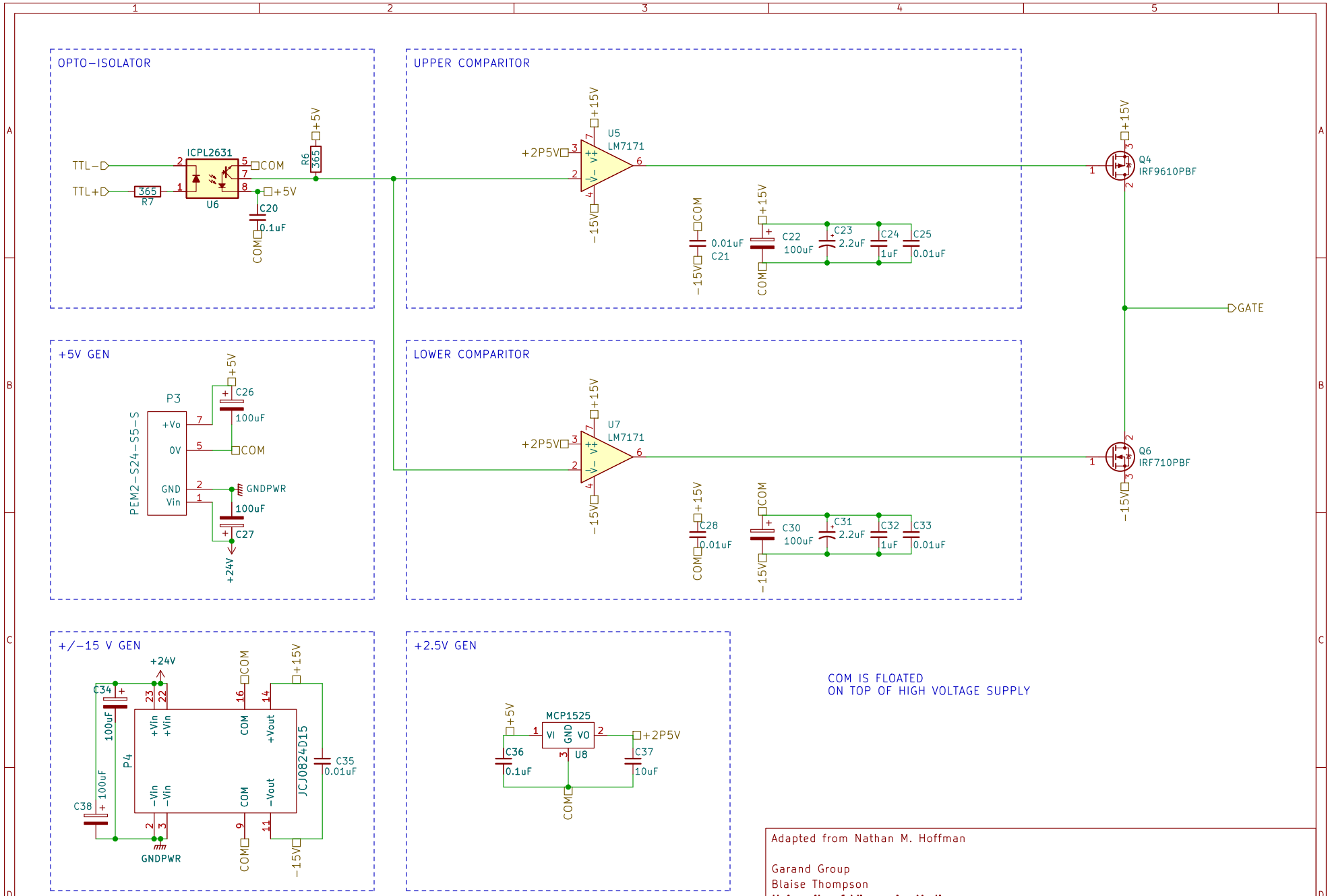

Adapted from Nathan M. Hoffman

Garand Group
Blaise Thompson
University of Wisconsin-Madison

Sheet: /sheet5F874D32/
File: driver.kicad_sch

Title: Pulse Generator, 500 V

Size: USLetter	Date: 2020-09-04	**Rev: 2.0.0**
KiCad E.D.A. kicad 6.0.10+dfsg-1		Id: 2/3

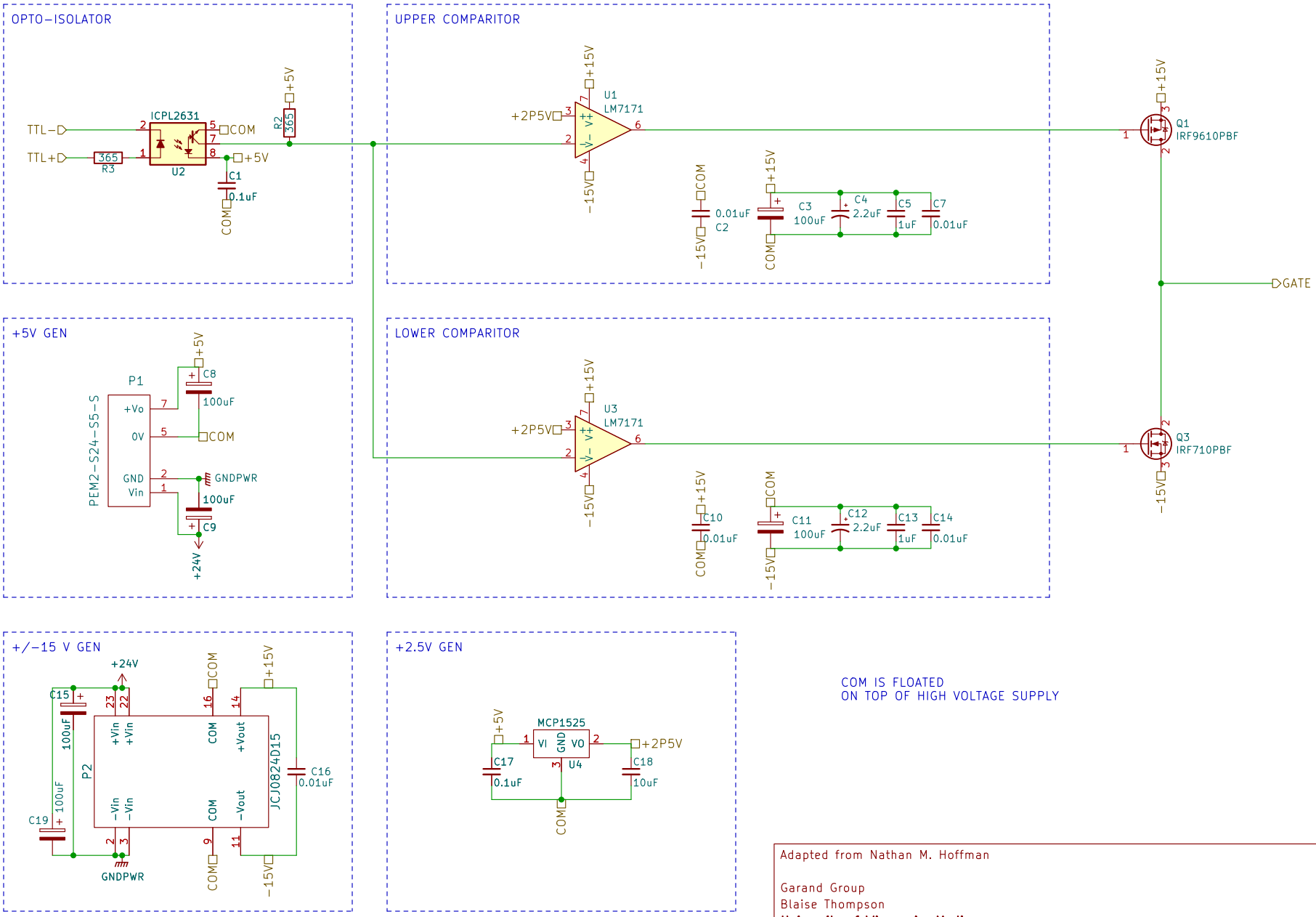

Adapted from Nathan M. Hoffman

Garand Group
Blaise Thompson
University of Wisconsin-Madison

Sheet: /Sheet5F8C1FCD/
File: driver.kicad_sch

Title: Pulse Generator, 500 V

Size: USLetter	Date: 2020-09-04	**Rev: 2.0.0**
KiCad E.D.A. kicad 6.0.10+dfsg-1		Id: 3/3