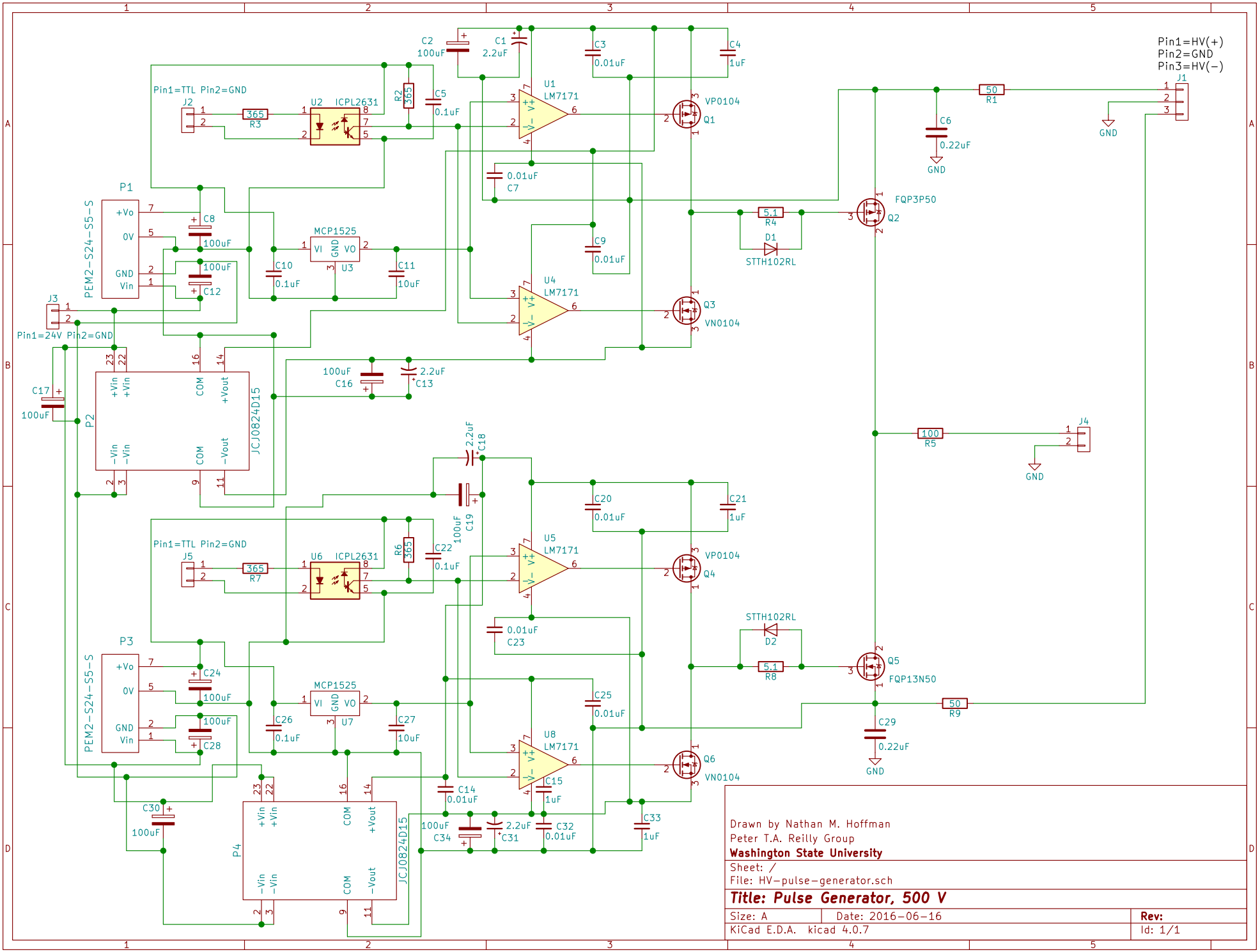

Drawn by Nathan M. Hoffman
Peter T.A. Reilly Group
Washington State University

Sheet: /
File: HV-pulse-generator.sch

Title: Pulse Generator, 500 V

Size: A	Date: 2016-06-16	Rev:
KiCad E.D.A. kicad 4.0.7		Id: 1/1