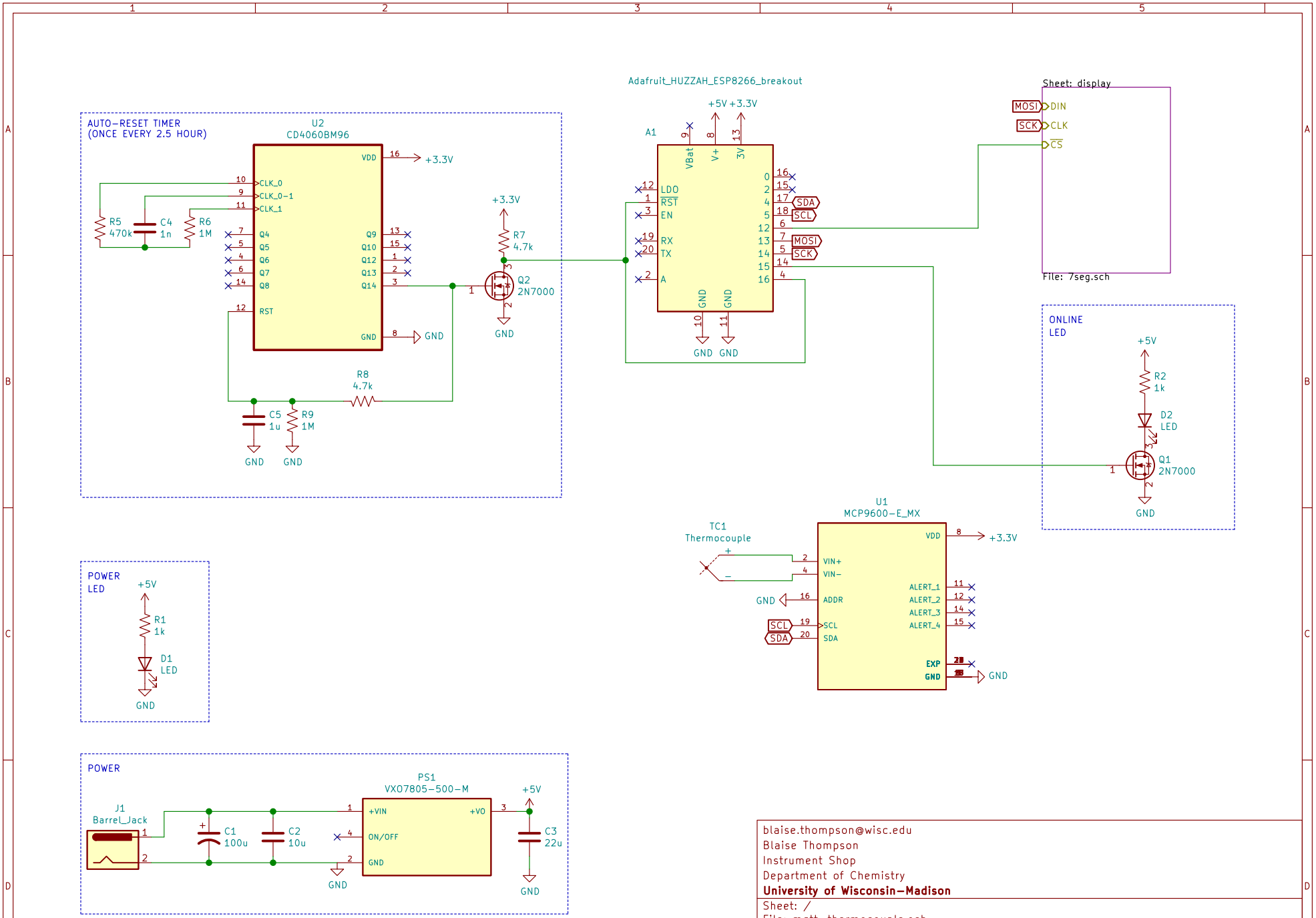

blaise.thompson@wisc.edu
Blaise Thompson
Instrument Shop
Department of Chemistry
University of Wisconsin-Madison

Sheet: /
File: mqtt-thermocouple.sch

Title: MQTT Thermocouple

Size: USLetter	Date: 2021-07-02	**Rev: A**
KiCad E.D.A. kicad 5.1.8+dfsg1-1+b1		Id: 1/2

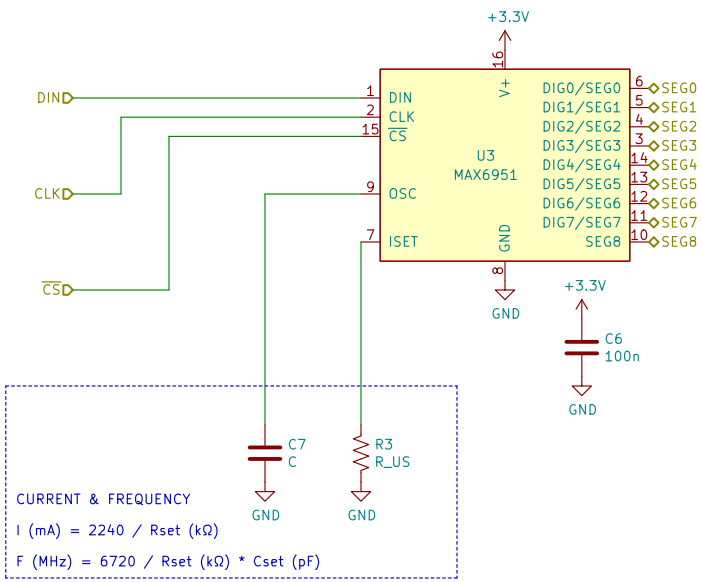

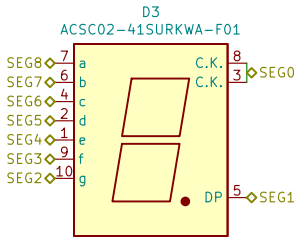

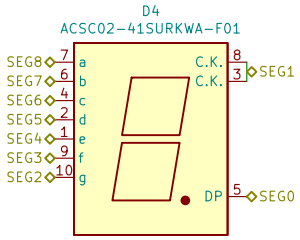

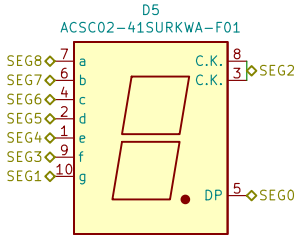

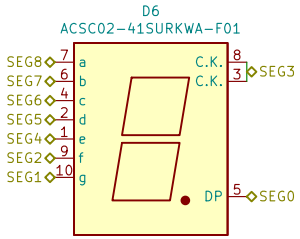

blaise.thompson@wisc.edu
Blaise Thompson
Instrument Shop
Department of Chemistry
University of Wisconsin–Madison

Sheet: /display/
File: 7seg.sch

Title: FRAM Prototype

Size: USLetter	Date: 2021-05-03	**Rev: A**
KiCad E.D.A. kicad 5.1.8+dfsg1-1+b1		Id: 2/2