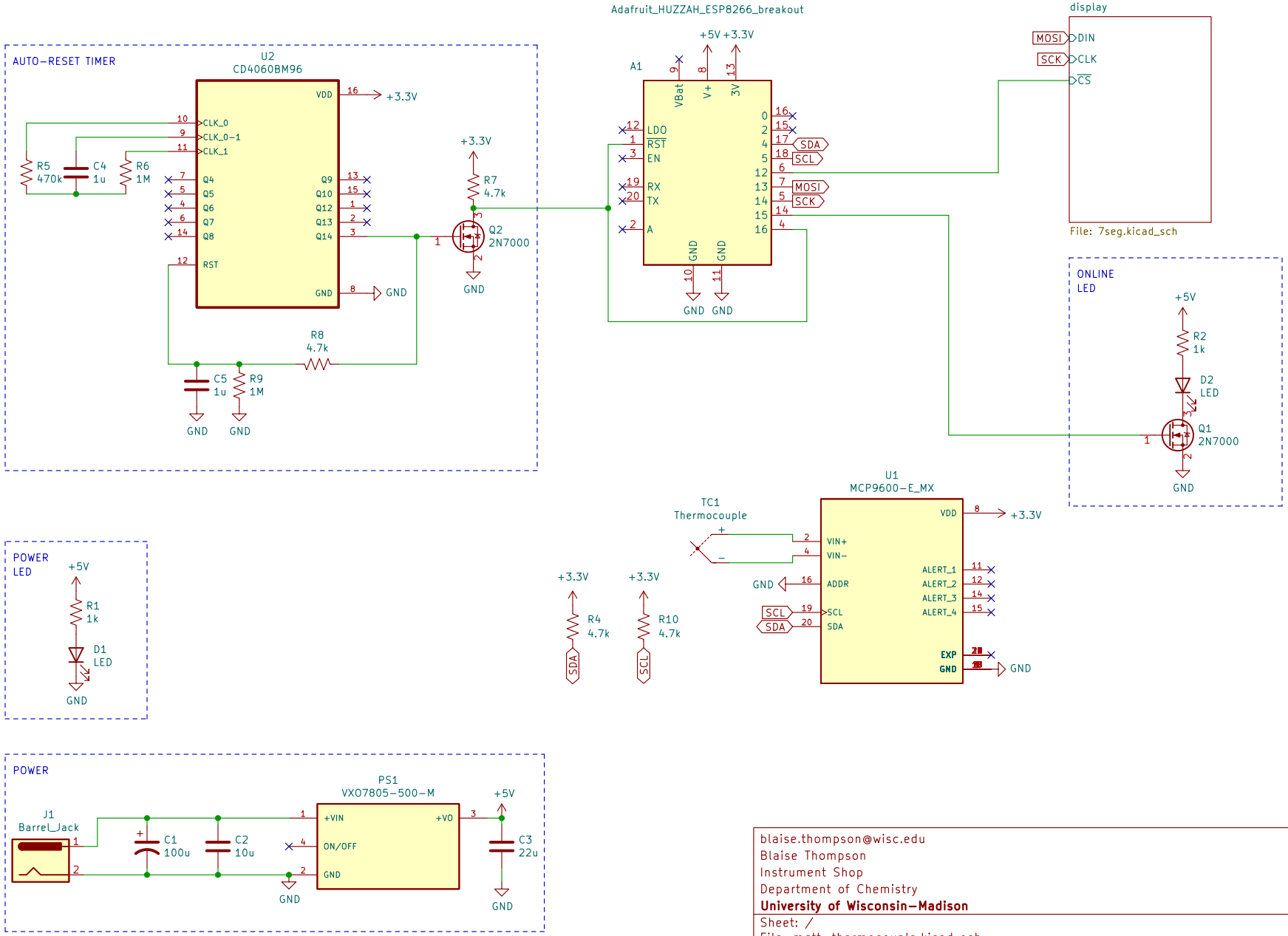

blaise.thompson@wisc.edu
Blaise Thompson
Instrument Shop
Department of Chemistry
University of Wisconsin-Madison

Sheet: /
File: mqtt-thermocouple.kicad_sch

Title: MQTT Thermocouple

Size: USLetter	Date: 2022-04-22	**Rev: B**
KiCad E.D.A. kicad 6.0.4+dfsg-1+b1		Id: 1/2

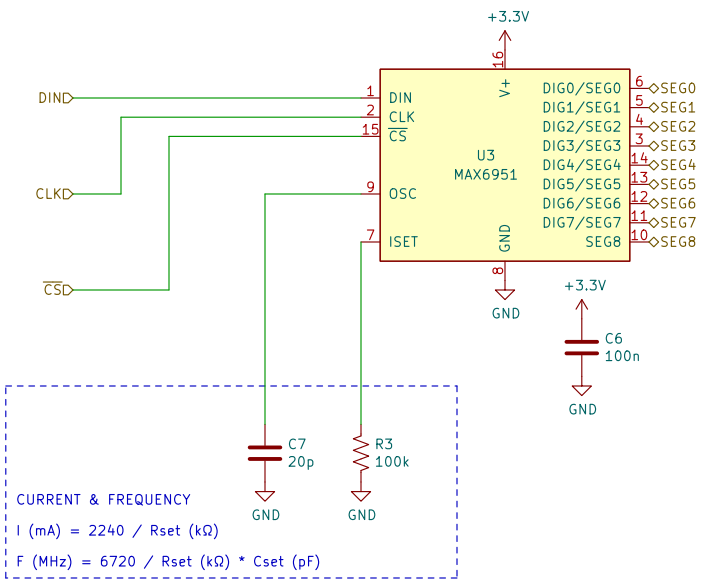

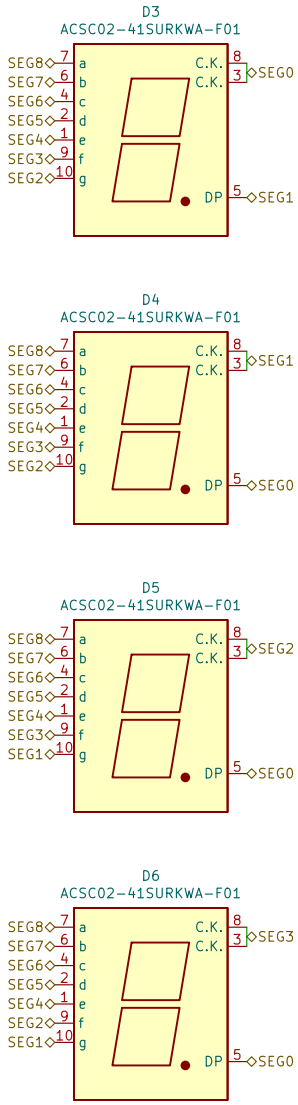

blaise.thompson@wisc.edu
Blaise Thompson
Instrument Shop
Department of Chemistry
University of Wisconsin–Madison

Sheet: /display/
File: 7seg.kicad_sch

Title: MQTT Thermocouple

Size: USLetter	Date: 2021-07-06	**Rev: A**
KiCad E.D.A. kicad 6.0.4+dfsg-1+b1		Id: 2/2