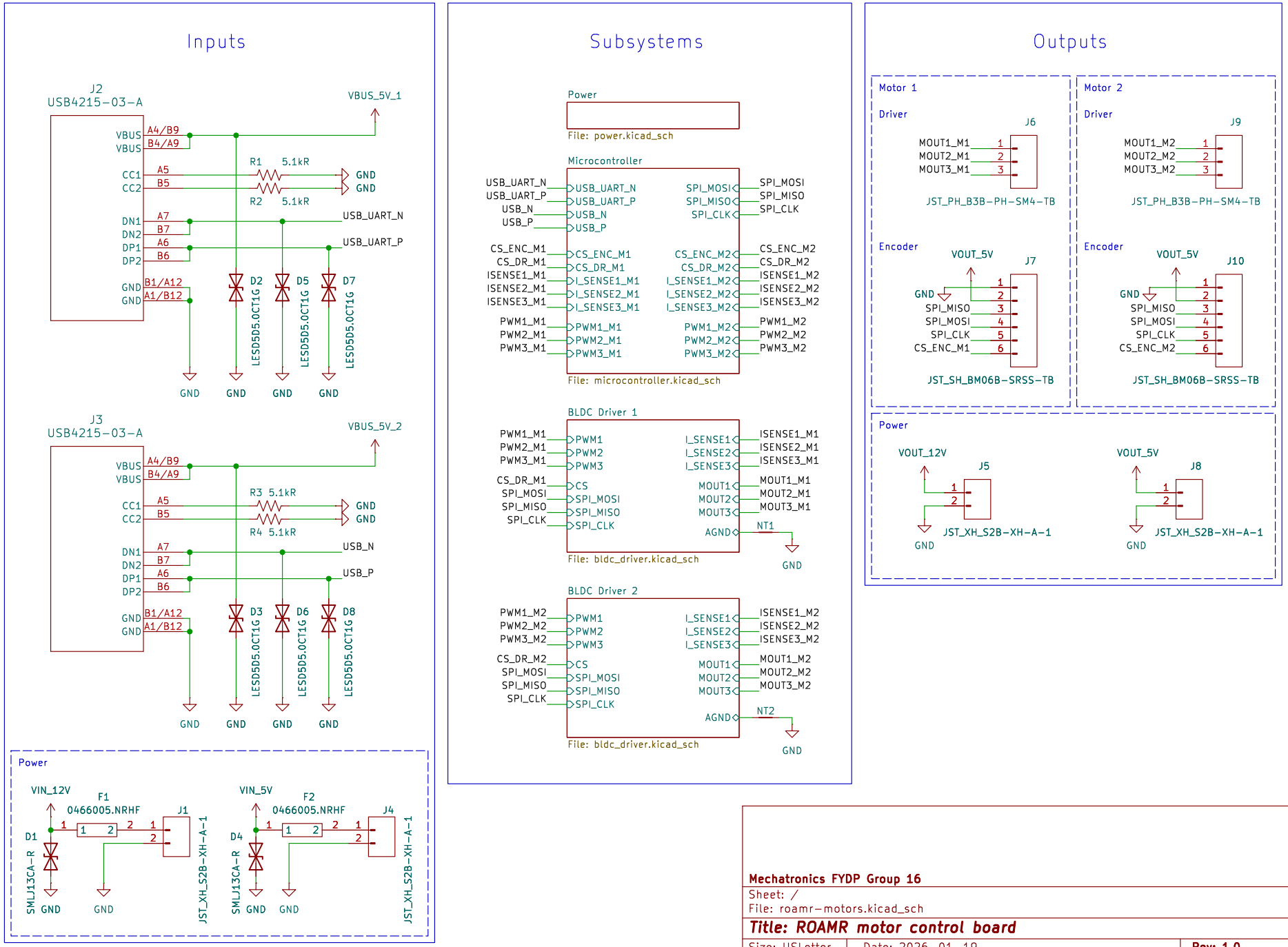

Mechatronics FYDP Group 16

Sheet: /

File: roamr-motors.kicad_sch

Title: ROAMR motor control board

Size: USLetter	Date: 2026-01-19	**Rev: 1.0**
KiCad E.D.A. 9.0.7		Id: 1/5

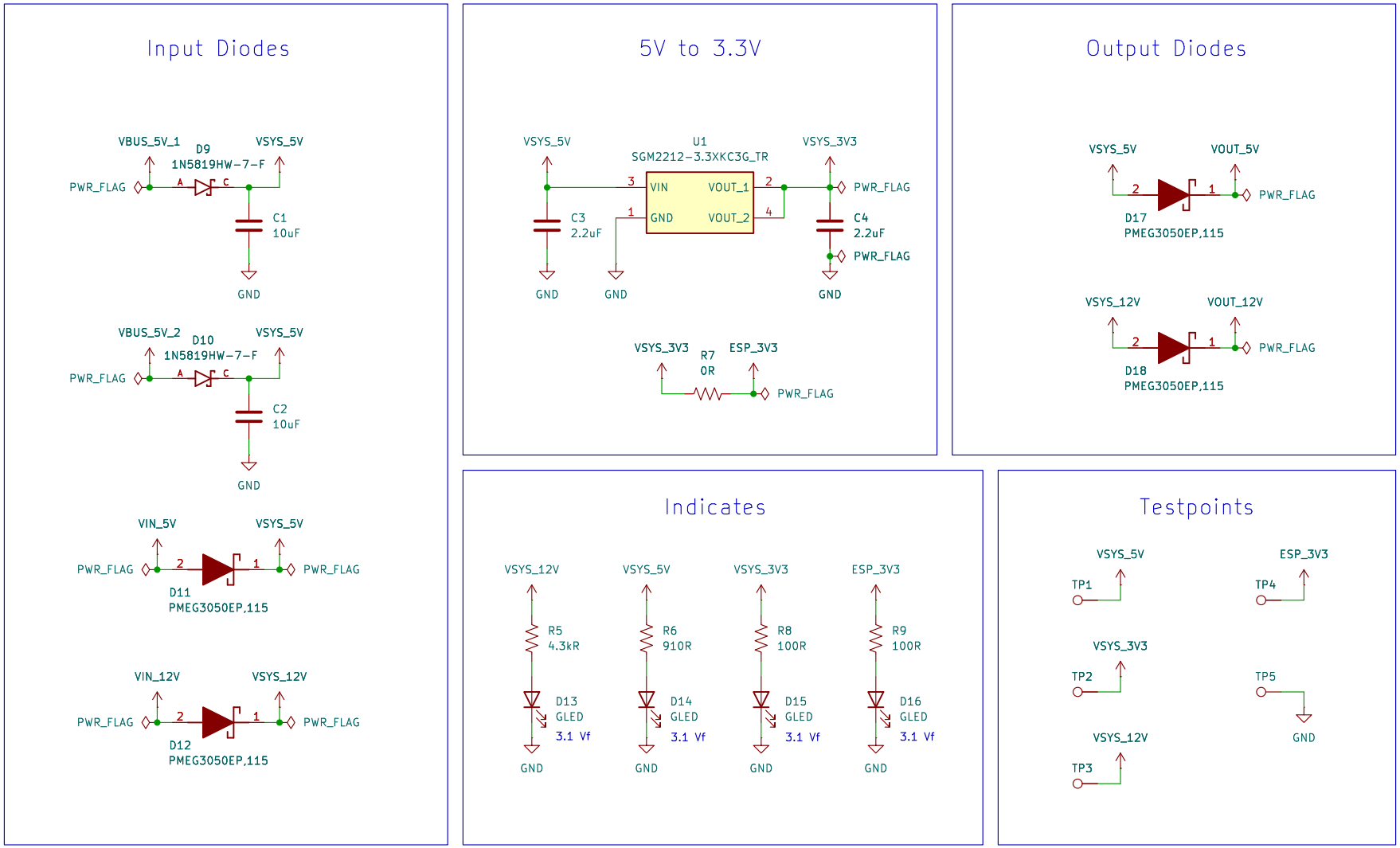

Mechatronics FYDP Group 16

Sheet: /Power/

File: power.kicad_sch

Title: ROAMR motor control board

Size: USLetter	Date: 2026-01-19	**Rev: 1.0**
KiCad E.D.A. 9.0.7		Id: 2/5

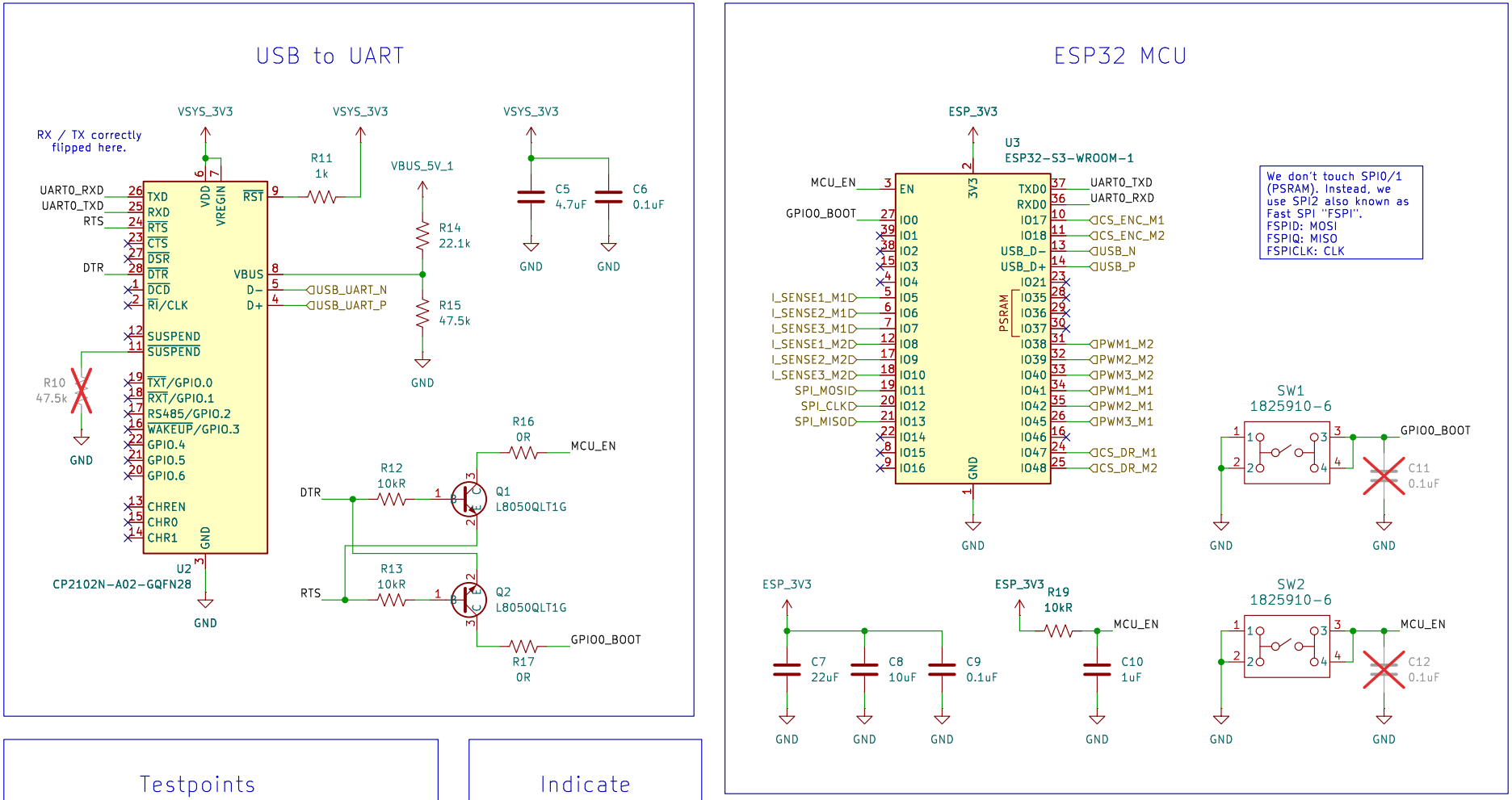

Mechatronics FYDP Group 16

Sheet: /Microcontroller/

File: microcontroller.kicad_sch

Title: ROAMR motor control board

Size: USLetter	Date: 2026-01-19	**Rev: 1.0**
KiCad E.D.A. 9.0.7		Id: 3/5

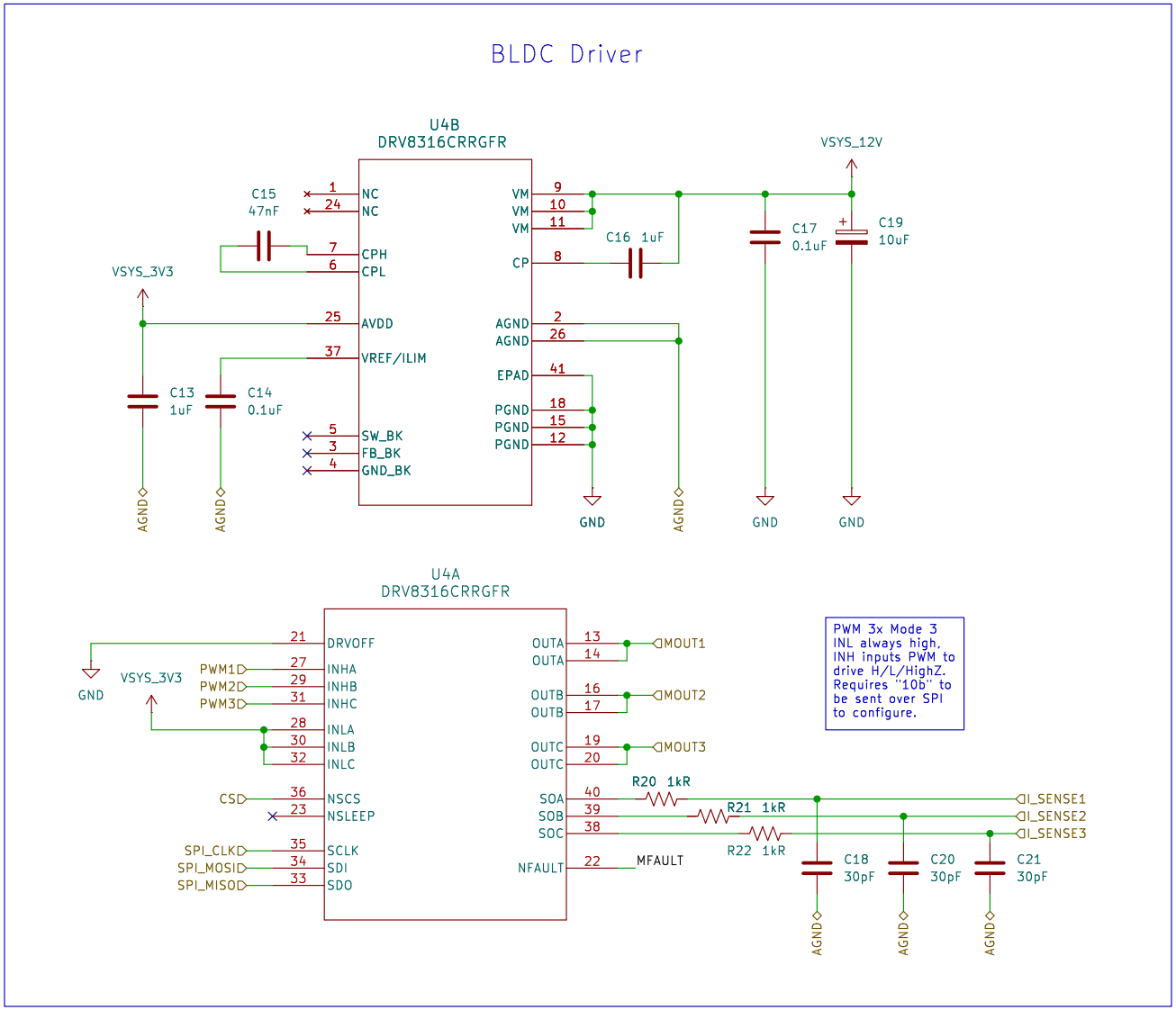

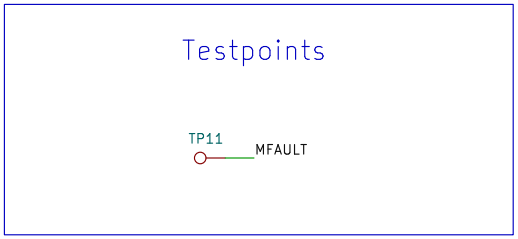

Mechatronics FYDP Group 16

Sheet: /BLDC Driver 1/

File: bldc_driver.kicad_sch

Title: ROAMR motor control board

Size: USLetter	Date: 2026-01-19	**Rev: 1.0**
KiCad E.D.A. 9.0.7		Id: 4/5

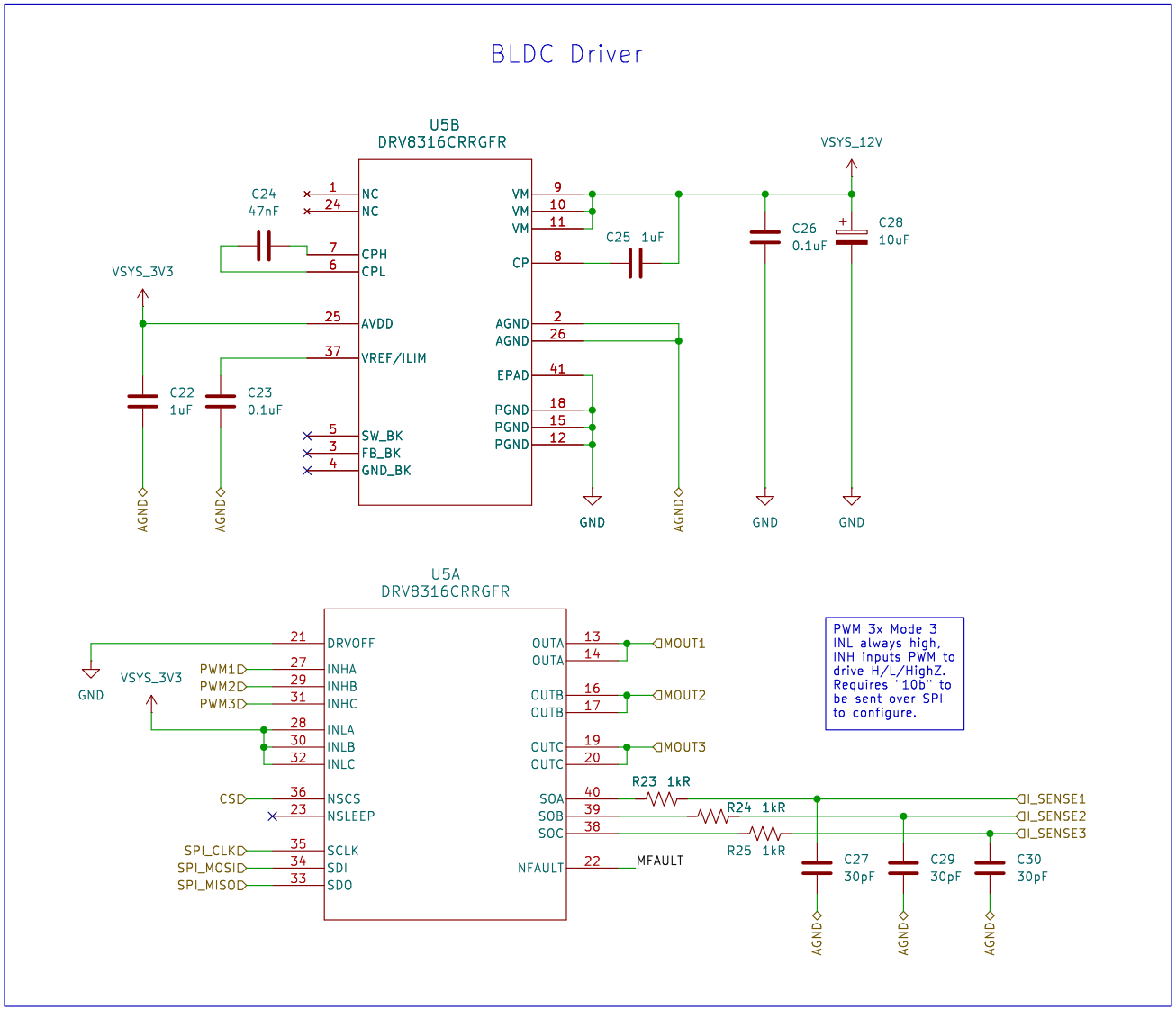

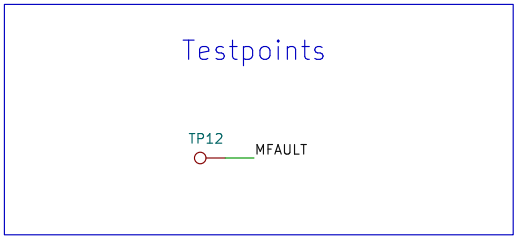

Mechatronics FYDP Group 16

Sheet: /BLDC Driver 2/

File: bldc_driver.kicad_sch

Title: ROAMR motor control board

Size: USLetter	Date: 2026-01-19	**Rev: 1.0**
KiCad E.D.A. 9.0.7		Id: 5/5