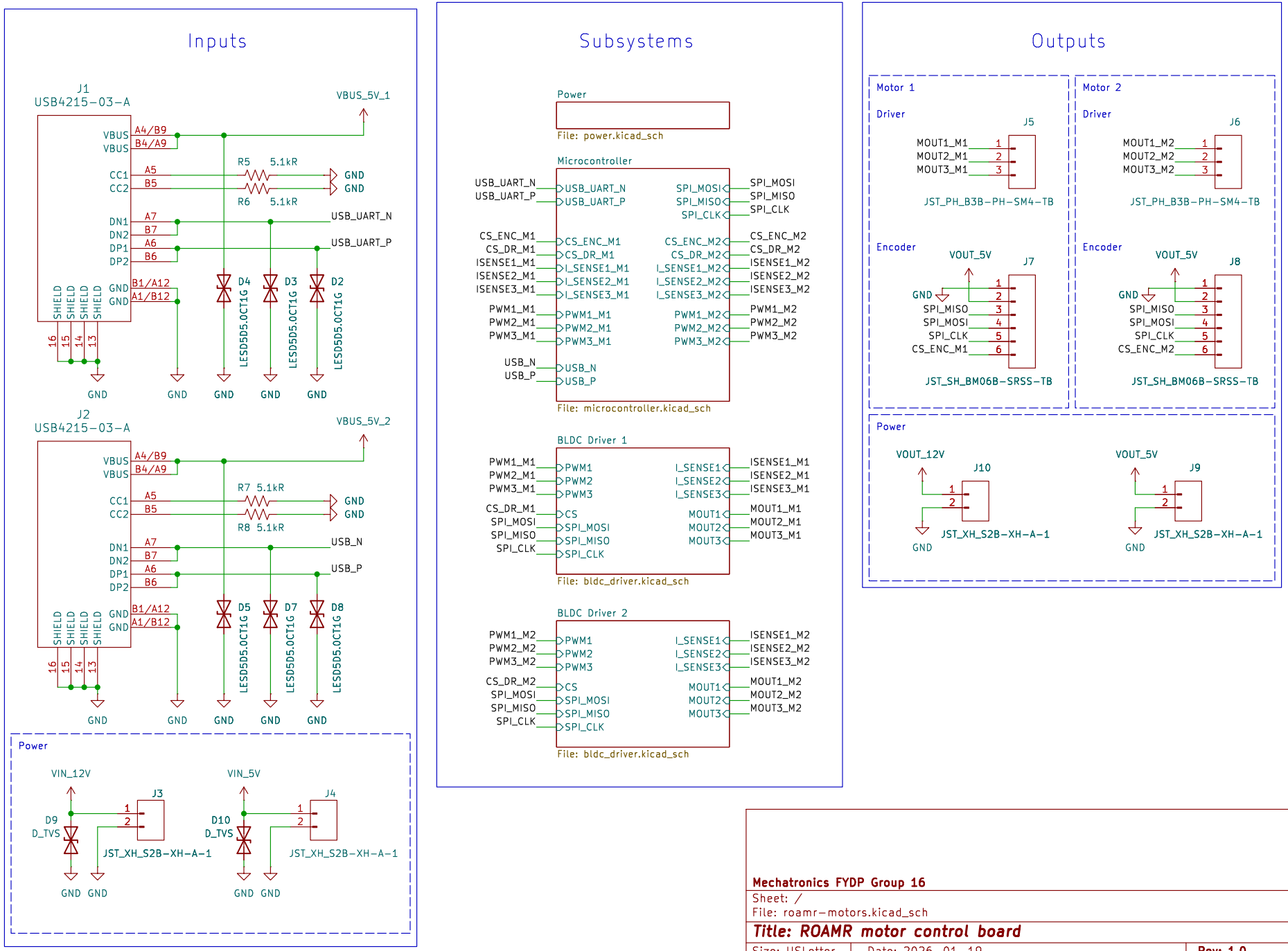
Inputs
J1
USB4215-03-A
VBUS_5V_1
VBUS
A4/B9
B4/A9
CC1
CC2
A5
B5
R5 5.1kR
R6 5.1kR
GND
DN1
DN2
DP1
DP2
A7
B7
A6
B6
USB_UART_N
USB_UART_P
B1/A12
A1/B12
SHIELD
D4
D3
D2
LESD5D5.0CT1G
J2
USB4215-03-A
VBUS_5V_2
R7 5.1kR
R8 5.1kR
USB_N
USB_P
D5
D7
D8
Power
VIN_12V
VIN_5V
J3
J4
D9
D10
D_TVS
JST_XH_S2B-XH-A-1
Subsystems
Power
File: power.kicad_sch
Microcontroller
USB_UART_N
USB_UART_P
SPI_MOSI
SPI_MISO
SPI_CLK
CS_ENC_M1
CS_DR_M1
ISENSE1_M1
ISENSE2_M1
ISENSE3_M1
I_SENSE1_M1
I_SENSE2_M1
I_SENSE3_M1
CS_ENC_M2
CS_DR_M2
ISENSE1_M2
ISENSE2_M2
ISENSE3_M2
I_SENSE1_M2
I_SENSE2_M2
I_SENSE3_M2
PWM1_M1
PWM2_M1
PWM3_M1
PWM1_M2
PWM2_M2
PWM3_M2
USB_N
USB_P
File: microcontroller.kicad_sch
BLDC Driver 1
PWM1
PWM2
PWM3
I_SENSE1
I_SENSE2
I_SENSE3
CS
MOUT1
MOUT2
MOUT3
File: bldc_driver.kicad_sch
BLDC Driver 2
File: bldc_driver.kicad_sch
Outputs
Motor 1
Driver
J5
MOUT1_M1
MOUT2_M1
MOUT3_M1
JST_PH_B3B-PH-SM4-TB
Encoder
VOUT_5V
J7
JST_SH_BM06B-SRSS-TB
Motor 2
J6
MOUT1_M2
MOUT2_M2
MOUT3_M2
J8
Power
VOUT_12V
J10
VOUT_5V
J9
Mechatronics FYDP Group 16
Sheet: /
File: roamr-motors.kicad_sch
Title: ROAMR motor control board
Size: USLetter
Date: 2026-01-19
Rev: 1.0
KiCad E.D.A. 9.0.7
Id: 1/5

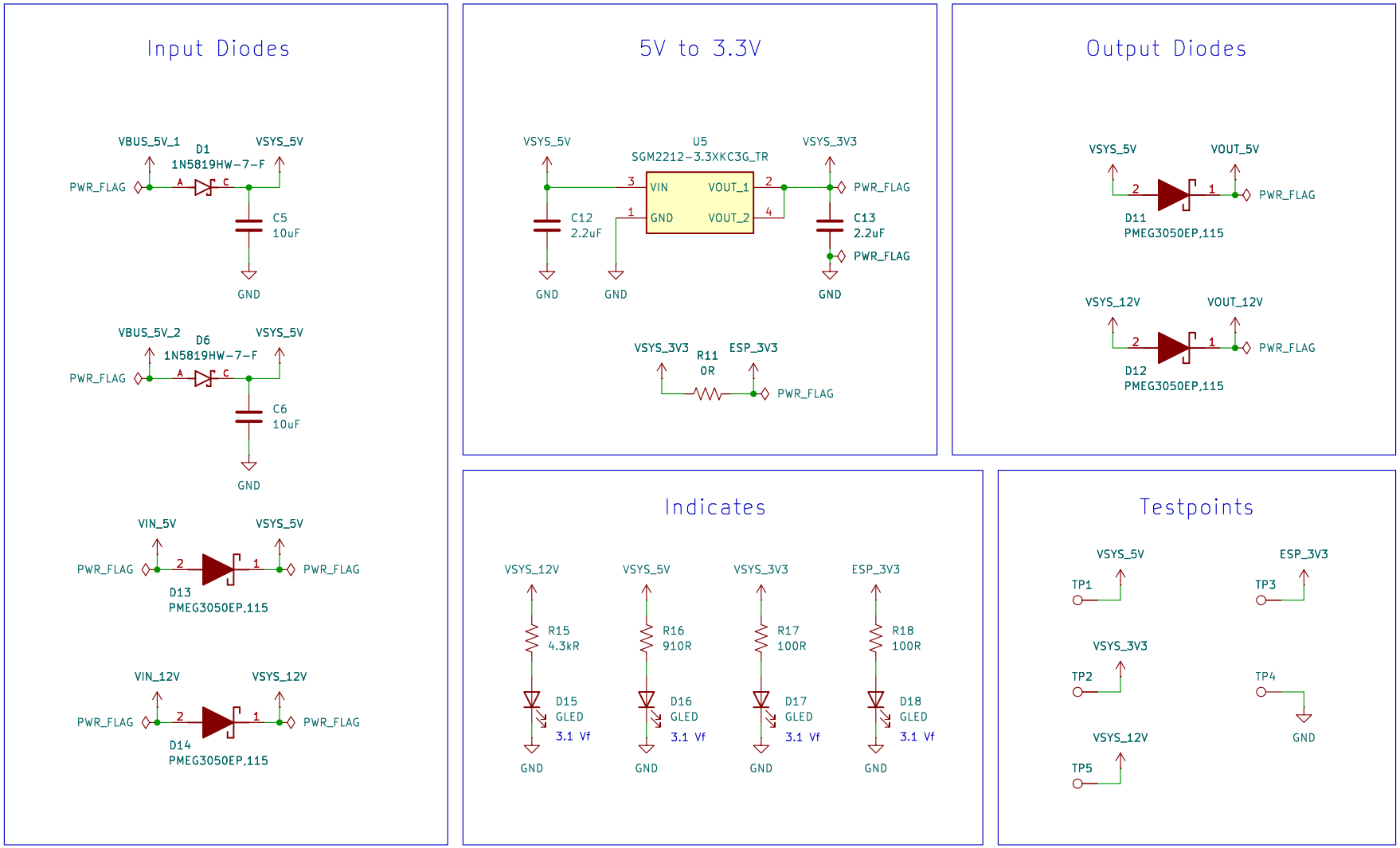

Mechatronics FYDP Group 16

Sheet: /Power/

File: power.kicad_sch

Title: ROAMR motor control board

Size: USLetter	Date: 2026-01-19	**Rev: 1.0**
KiCad E.D.A. 9.0.7		Id: 2/5

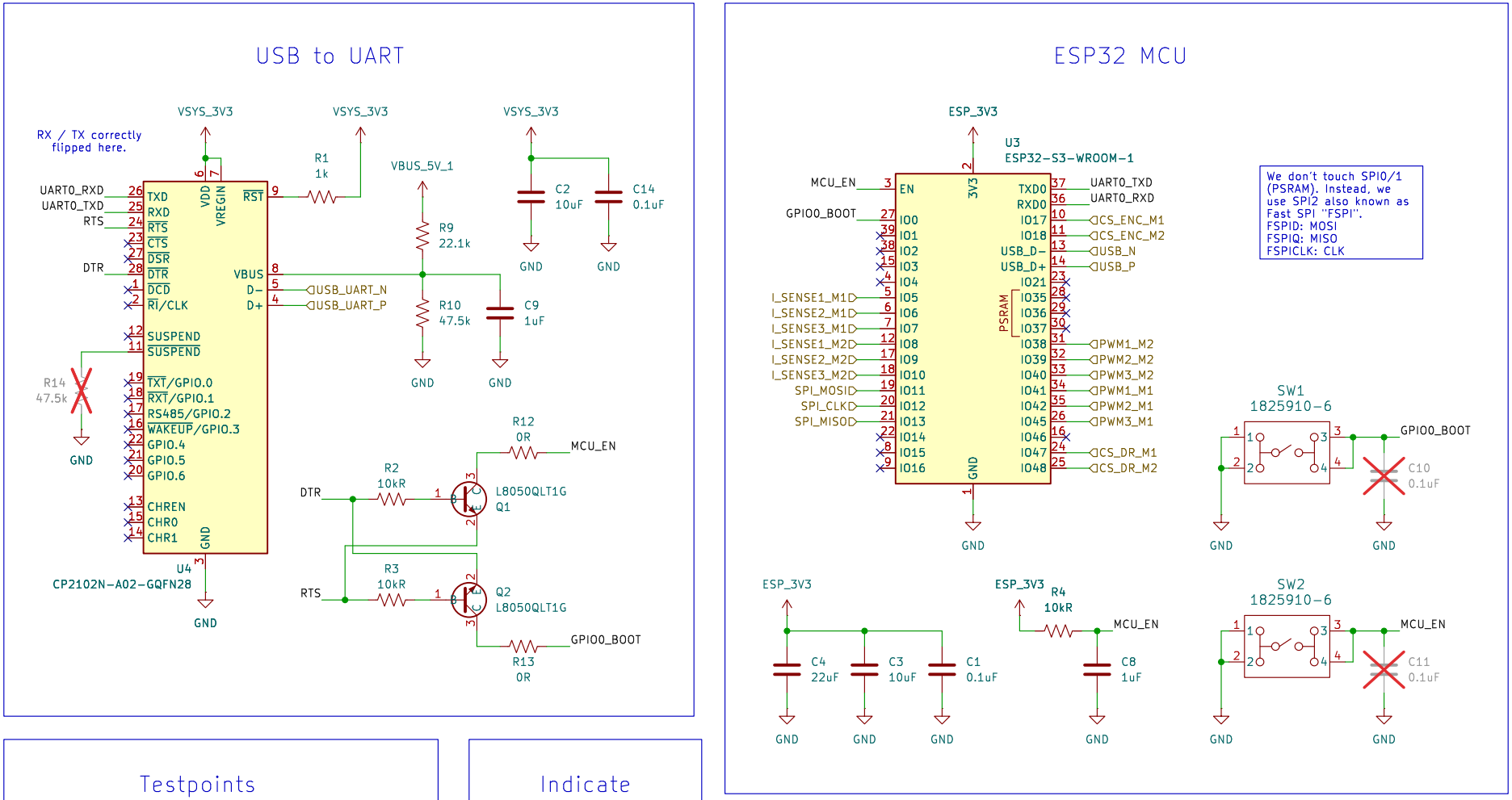

Mechatronics FYDP Group 16

Sheet: /Microcontroller/

File: microcontroller.kicad_sch

Title: ROAMR motor control board

Size: USLetter	Date: 2026-01-19	**Rev: 1.0**
KiCad E.D.A. 9.0.7		Id: 3/5

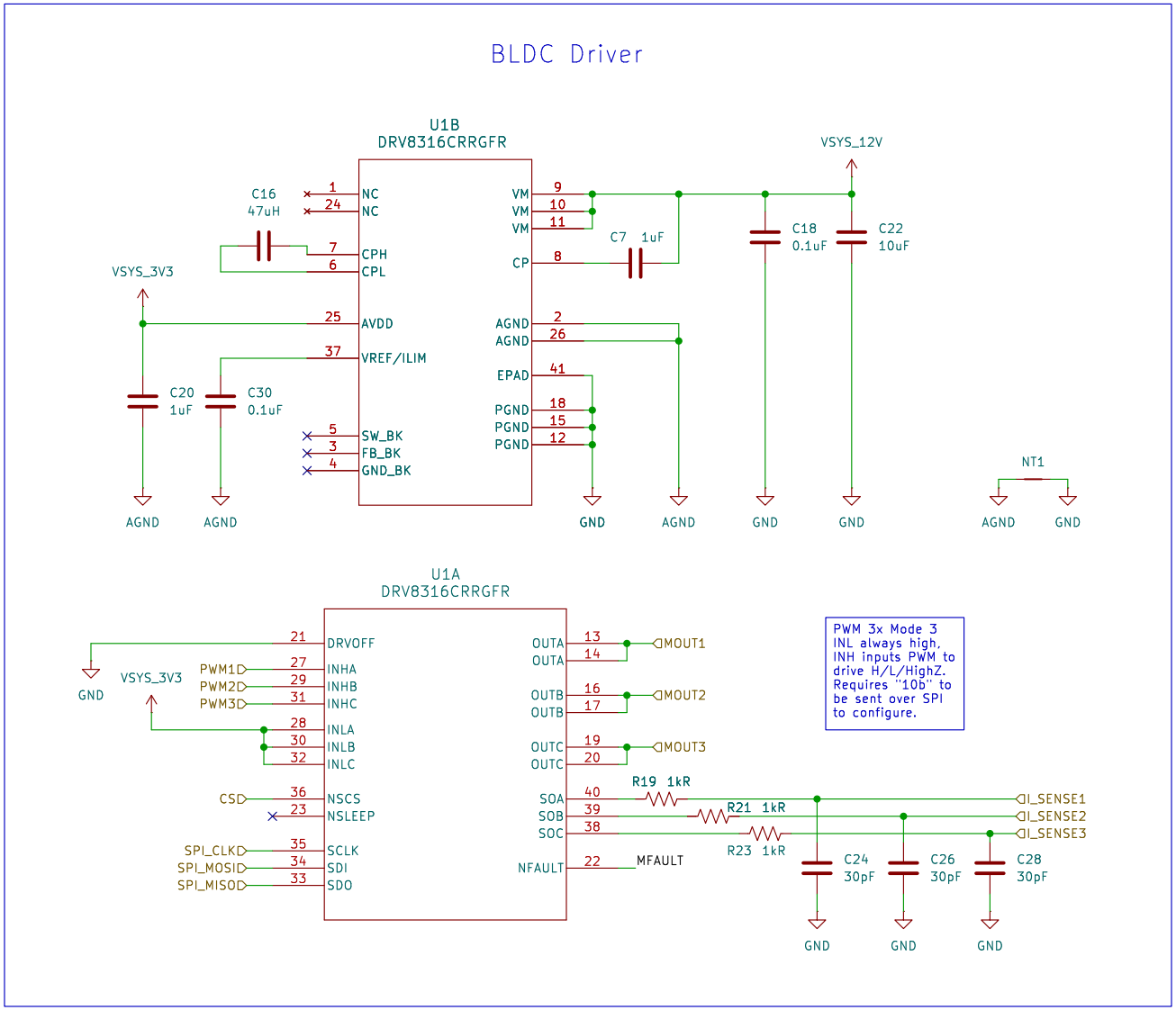

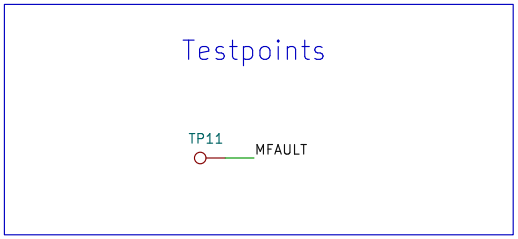

Mechatronics FYDP Group 16

Sheet: /BLDC Driver 1/

File: bldc_driver.kicad_sch

Title: ROAMR motor control board

Size: USLetter	Date: 2026-01-19	**Rev: 1.0**
KiCad E.D.A. 9.0.7		Id: 4/5

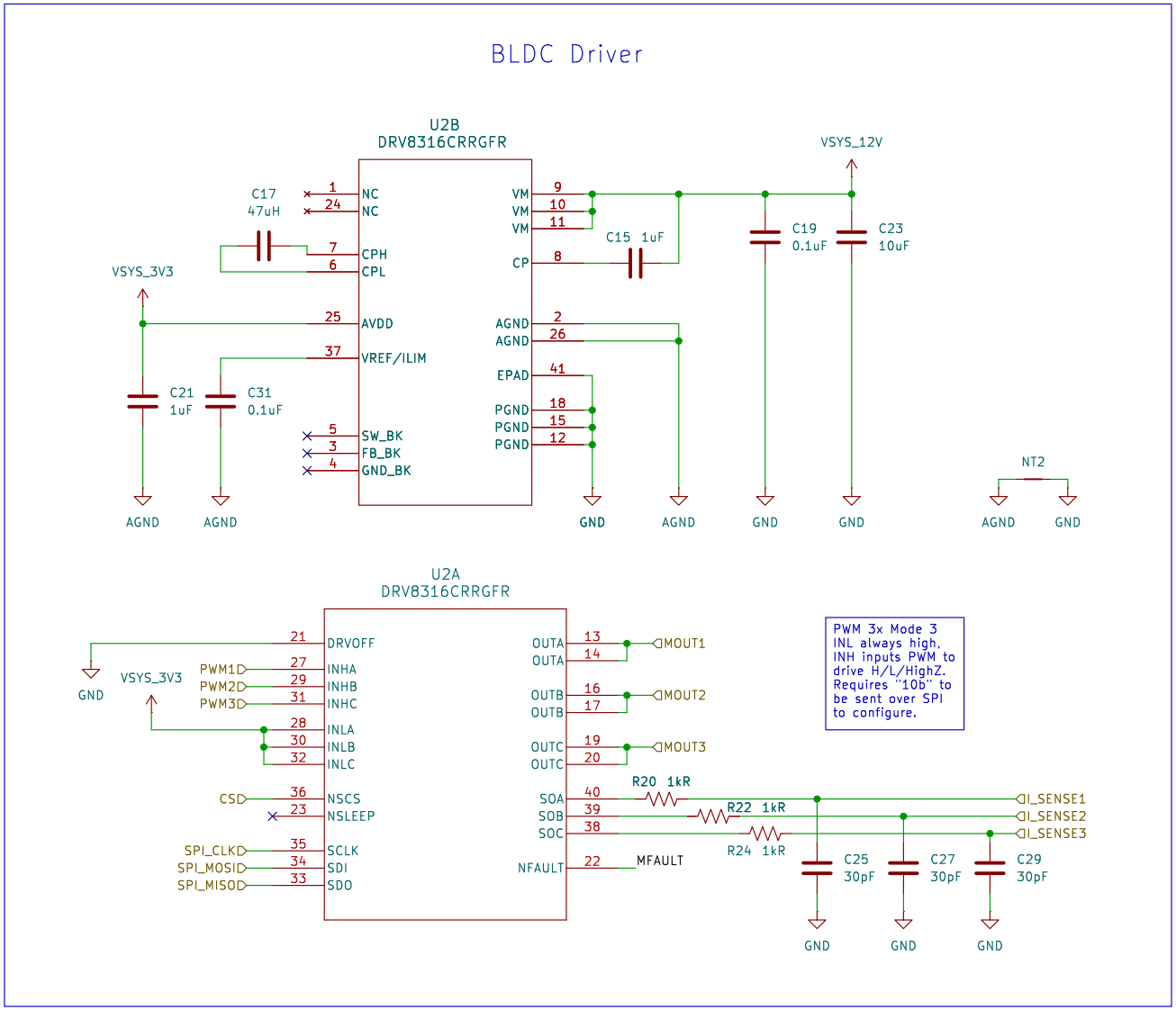

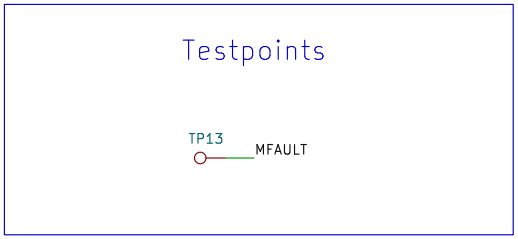

Mechatronics FYDP Group 16

Sheet: /BLDC Driver 2/

File: bldc_driver.kicad_sch

Title: ROAMR motor control board

Size: USLetter	Date: 2026-01-19	**Rev: 1.0**
KiCad E.D.A. 9.0.7		Id: 5/5