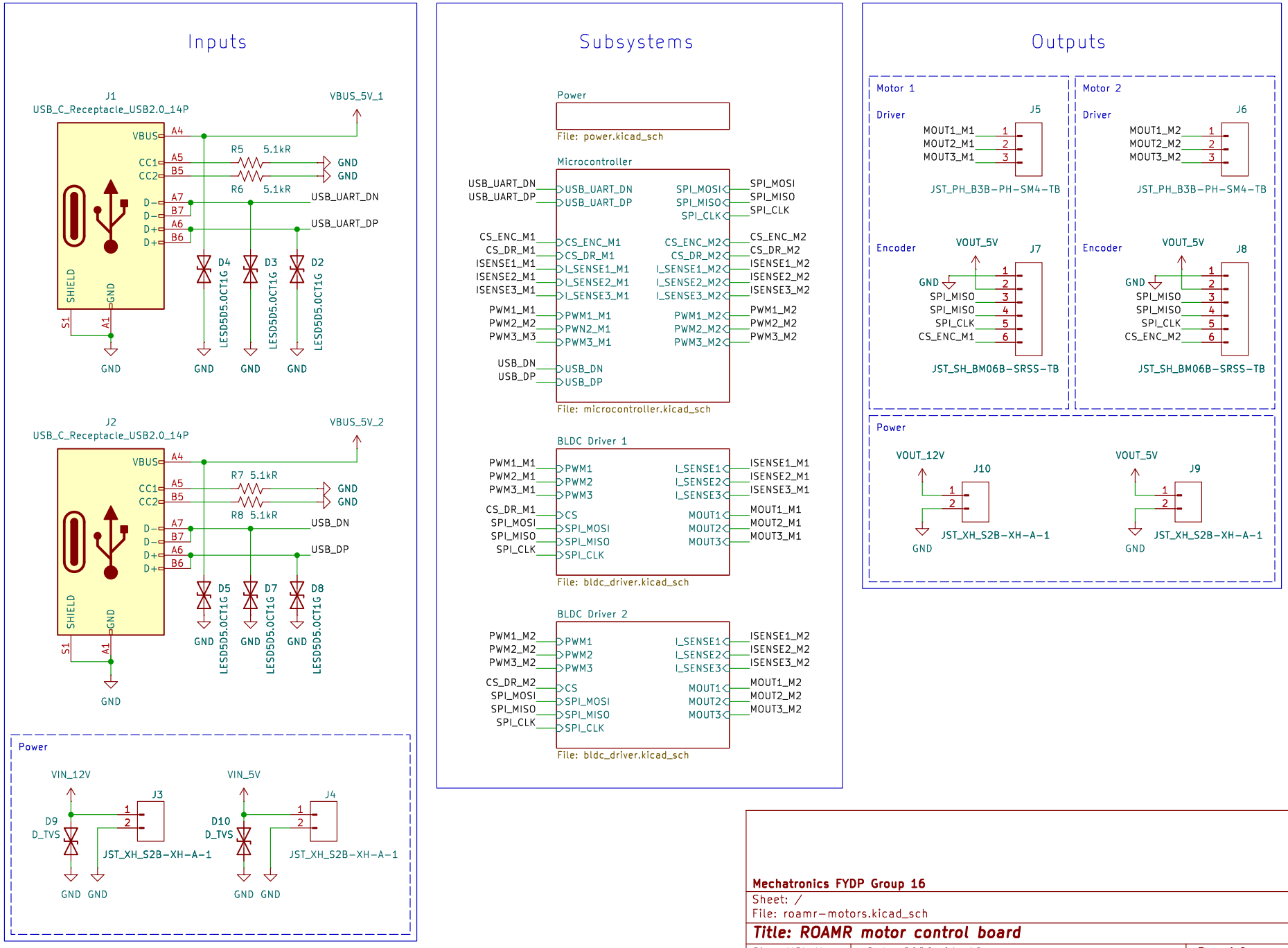

Mechatronics FYDP Group 16

Sheet: /

File: roamr−motors.kicad_sch

Title: ROAMR motor control board

Size: USLetter	Date: 2026−01−19	**Rev: 1.0**
KiCad E.D.A. 9.0.7		Id: 1/5

Input Diodes

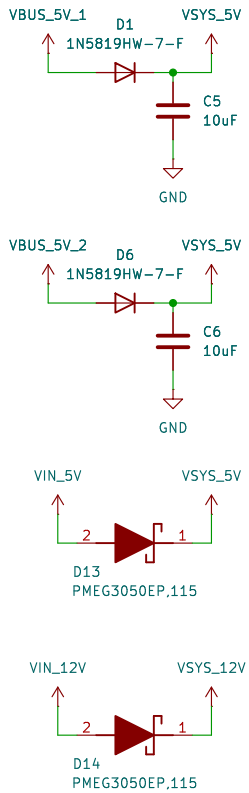

5V to 3.3V

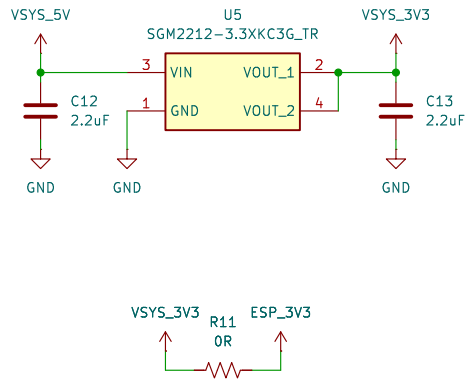

Output Diodes

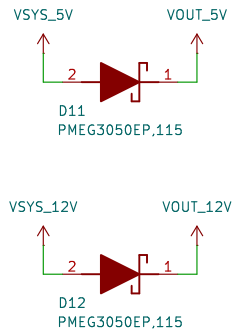

Mechatronics FYDP Group 16

Sheet: /Power/
File: power.kicad_sch

Title: ROAMR motor control board

Size: A4	Date: 2026-01-19	**Rev: 1.0**
KiCad E.D.A. 9.0.7		Id: 2/5

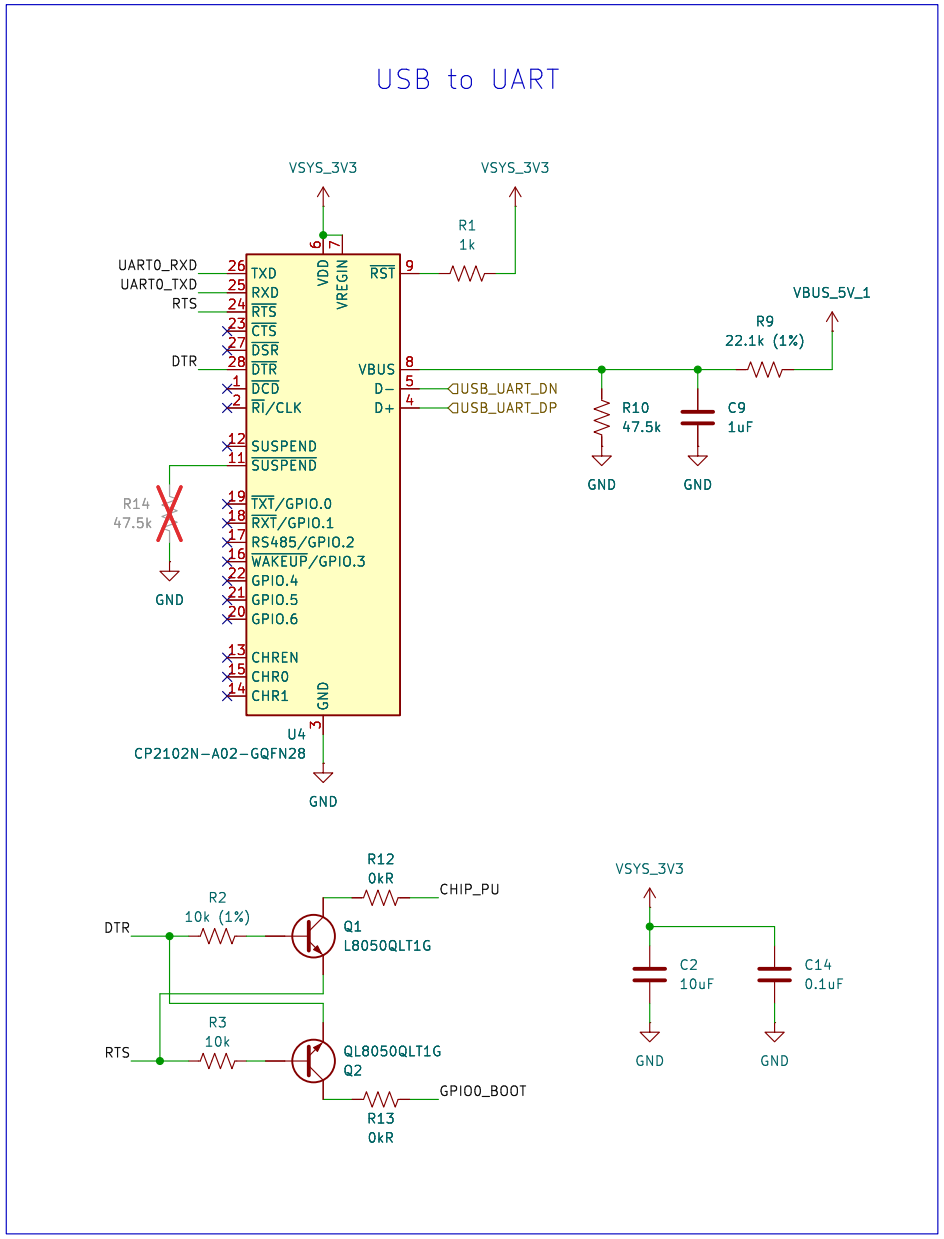

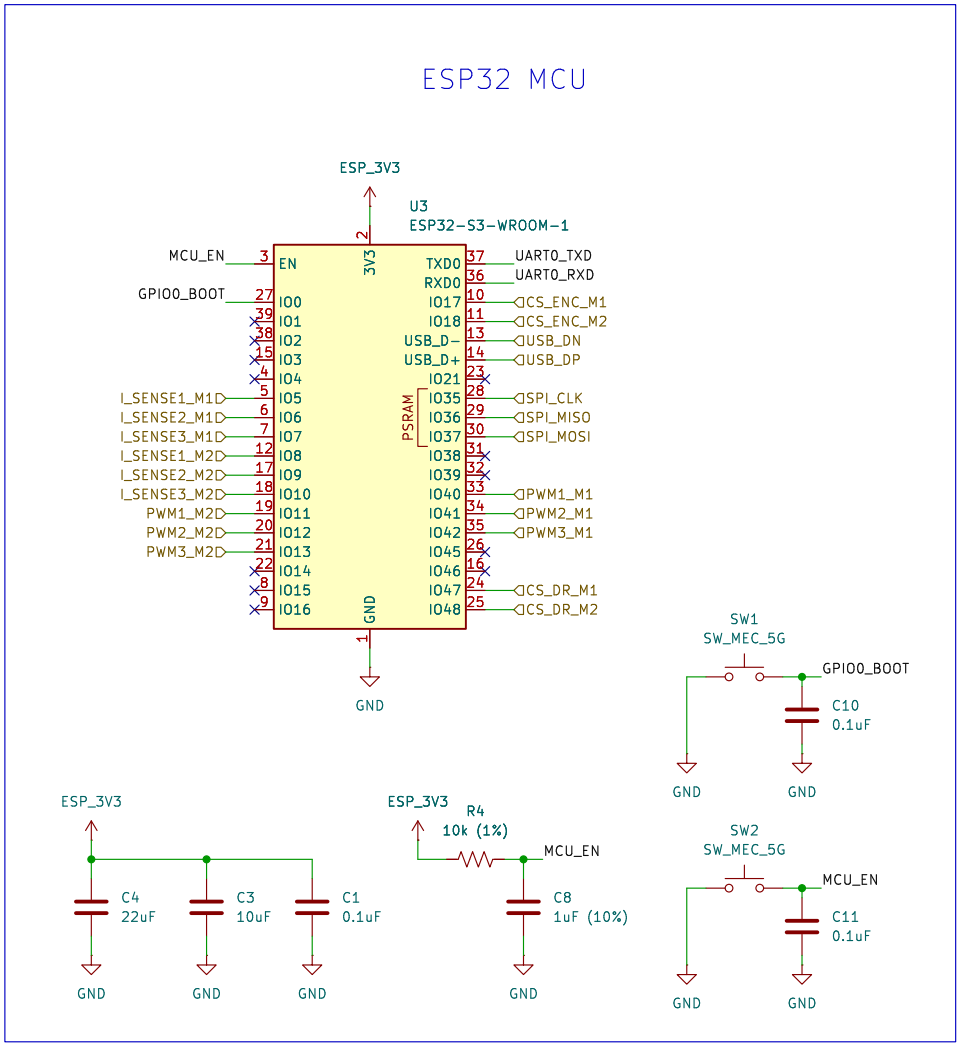

Mechatronics FYDP Group 16

Sheet: /Microcontroller/
File: microcontroller.kicad_sch

Title: ROAMR motor control board

Size: A4	Date: 2026−01−19	**Rev: 1.0**
KiCad E.D.A. 9.0.7		Id: 3/5

BLDC Driver

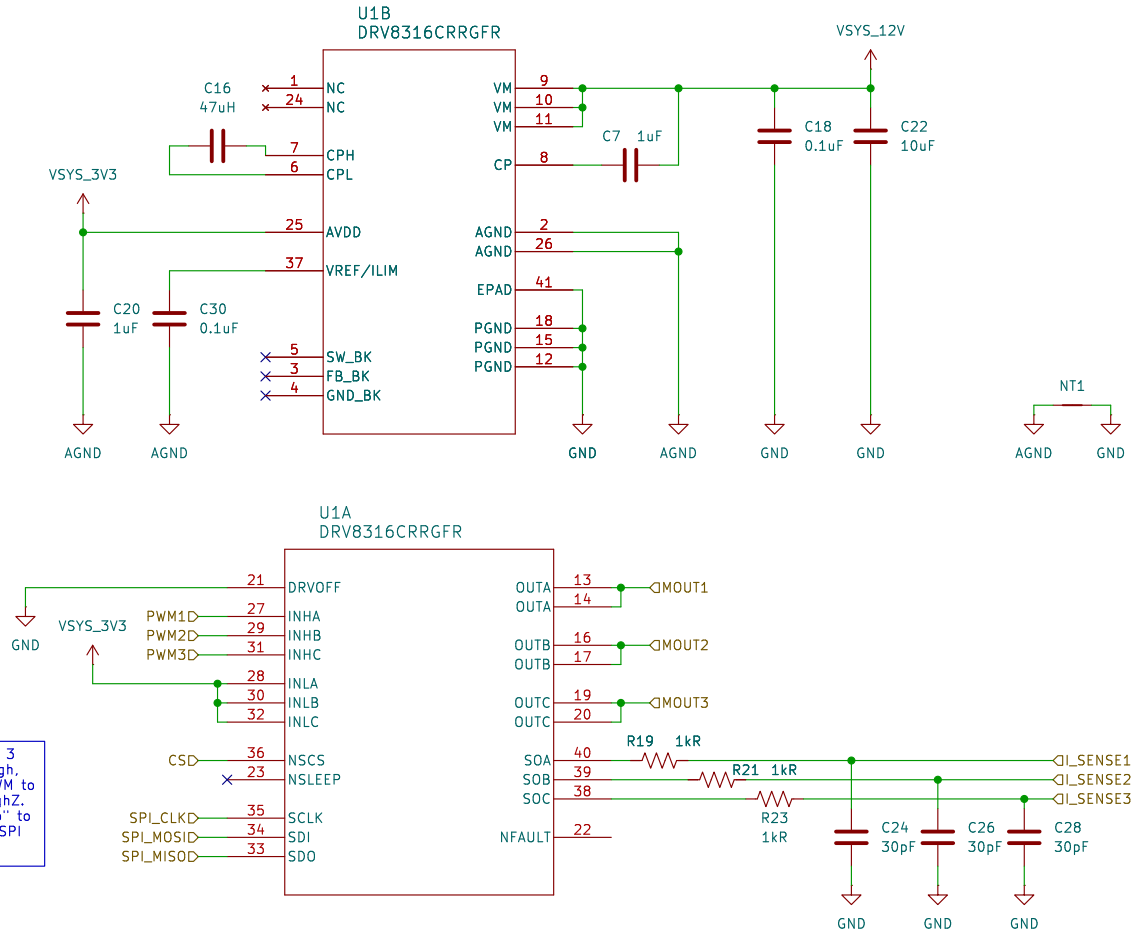

PWM 3x Mode 3
INL always high,
INH inputs PWM to
drive H/L/HighZ.
Requires "10b" to
be sent over SPI
to configure.

Mechatronics FYDP Group 16

Sheet: /BLDC Driver 1/
File: bldc_driver.kicad_sch

Title: ROAMR motor control board

Size: A4	Date: 2026-01-19	**Rev: 1.0**
KiCad E.D.A. 9.0.7		Id: 4/5

BLDC Driver

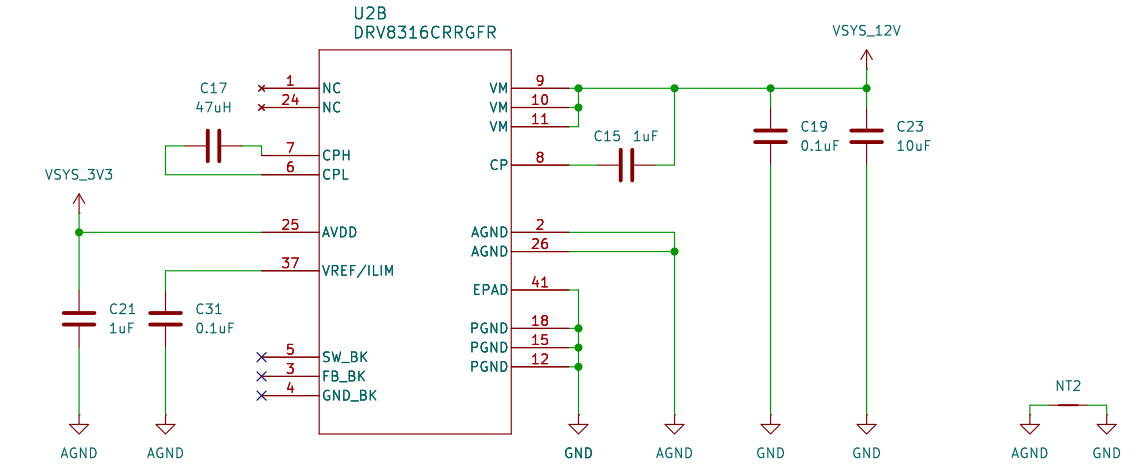

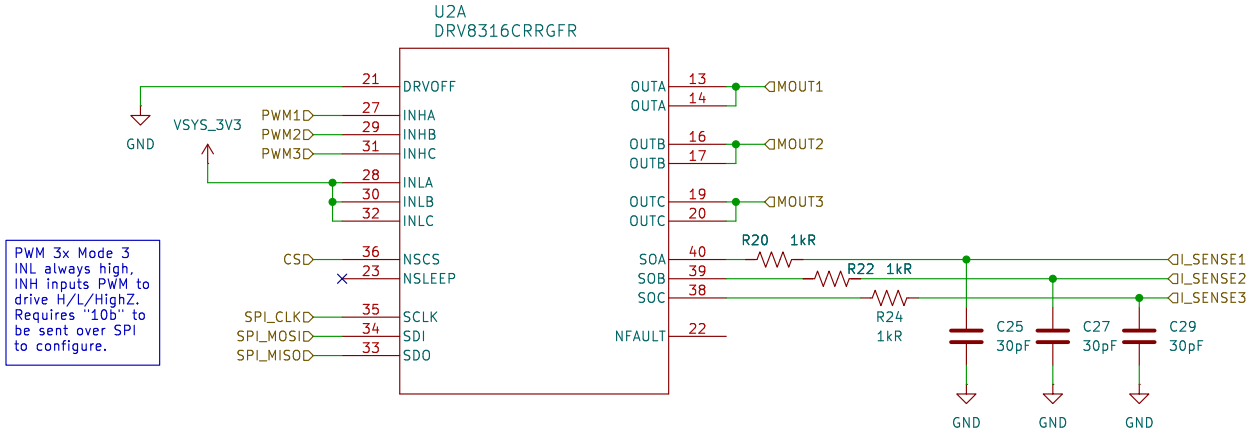

PWM 3x Mode 3
INL always high,
INH inputs PWM to
drive H/L/HighZ.
Requires "10b" to
be sent over SPI
to configure.

Mechatronics FYDP Group 16

Sheet: /BLDC Driver 2/
File: bldc_driver.kicad_sch

Title: ROAMR motor control board

Size: A4	Date: 2026-01-19	**Rev: 1.0**
KiCad E.D.A. 9.0.7		Id: 5/5