Inputs

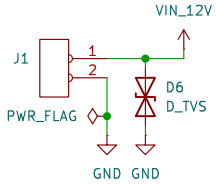

Input Control

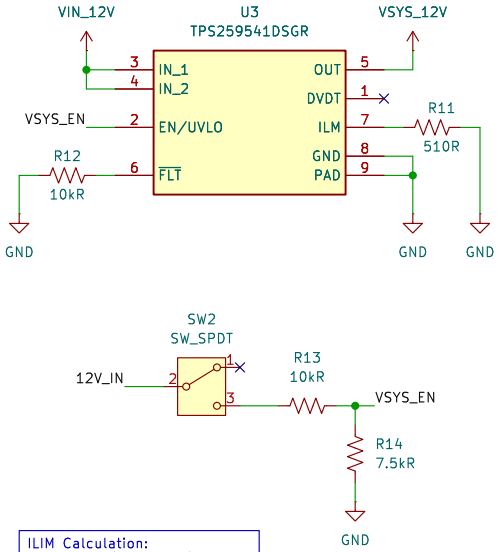

ILIM Calculation:
R = 2000/(ILIM−0.04)
505R = 2000/(4A−0.04)
Rounded up to 510R

EN pin requires 6V or lower, active high. Battery can fluctuate between 12.6V−9V. Voltage divider used.

Subsystems

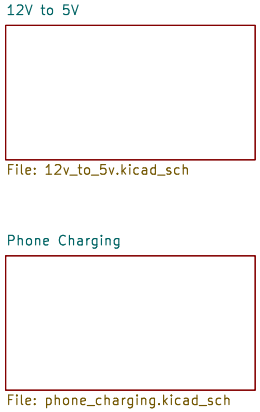

Testpoints

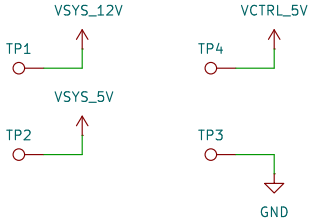

Outputs

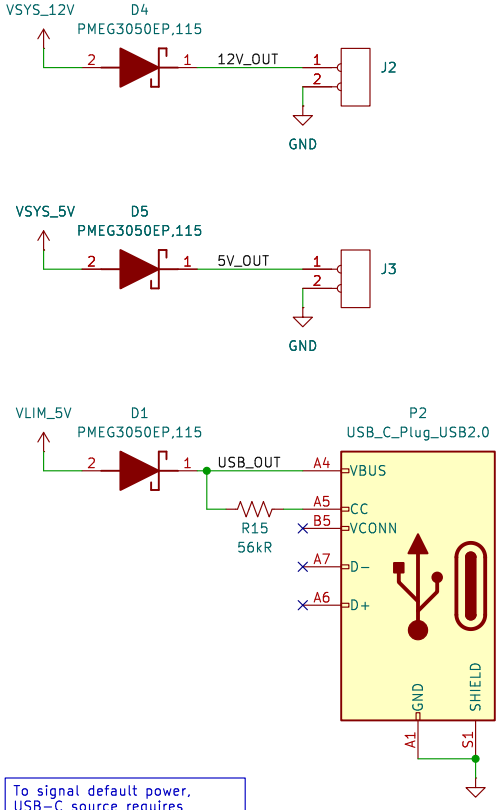

To signal default power, USB−C source requires putting a 56kR pull−up on the CC lines.

Mechatronics FYDP Group 16

Sheet: /

File: roamr−power.kicad_sch

Title: ROAMR power board

Size: USLetter	Date: 2026−01−18	**Rev: 1.0**
KiCad E.D.A. 9.0.7		Id: 1/3

12V to 5V Buck

4.5V to 28V input
Max 10A continuous output

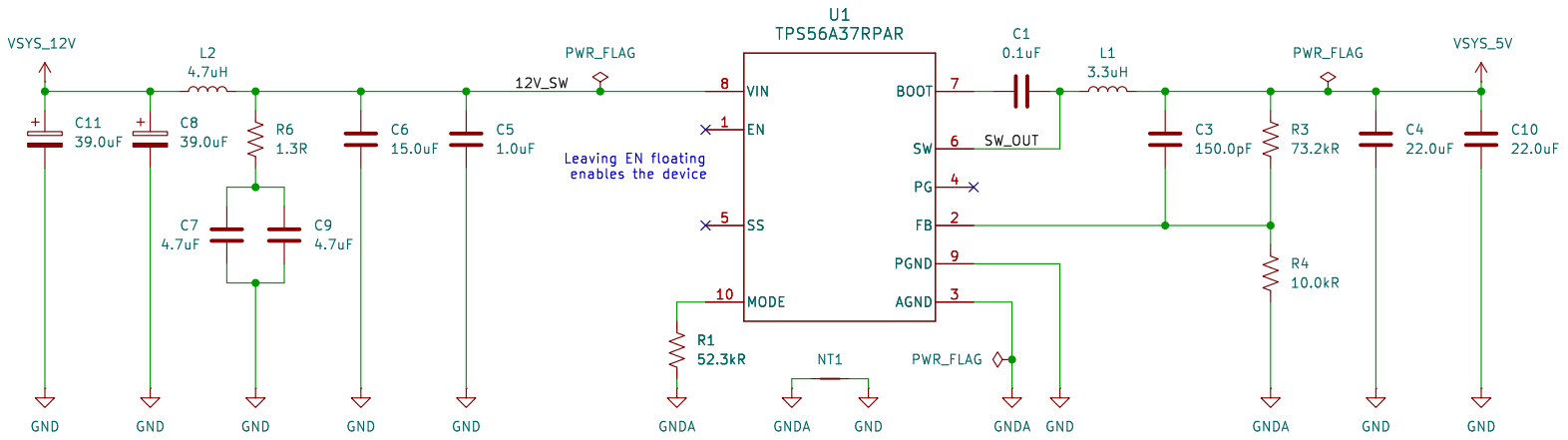

12V Up

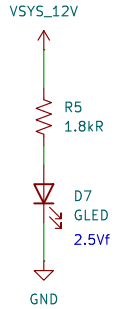

5V Up

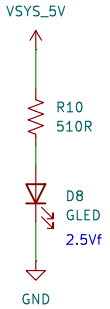

Mechatronics FYDP Group 16

Sheet: /12V to 5V/
File: 12v_to_5v.kicad_sch

Title: ROAMR power board

Size: USLetter	Date: 2026-01-18	**Rev: 1.0**
KiCad E.D.A. 9.0.7		Id: 3/3

USB Charging Current Limiter

Configured for 1A limit

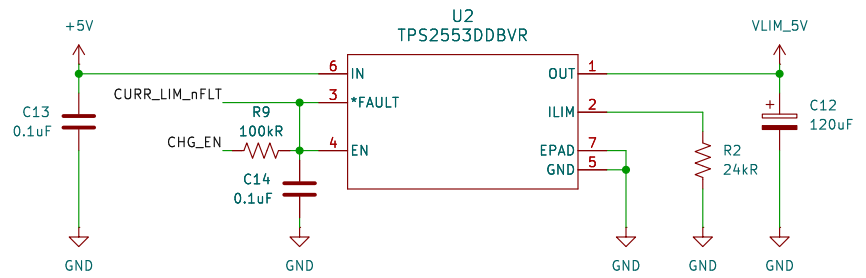

USB Charging Enable

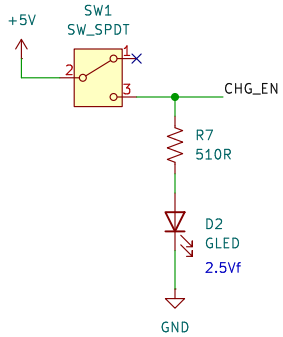

Fault Indicator

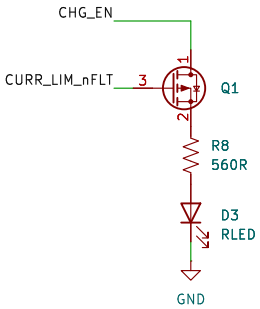

Mechatronics FYDP Group 16

Sheet: /Phone Charging/

File: phone_charging.kicad_sch

Title: ROAMR power board

Size: USLetter	Date: 2026-01-18	**Rev: 1.0**
KiCad E.D.A. 9.0.7		Id: 5/3