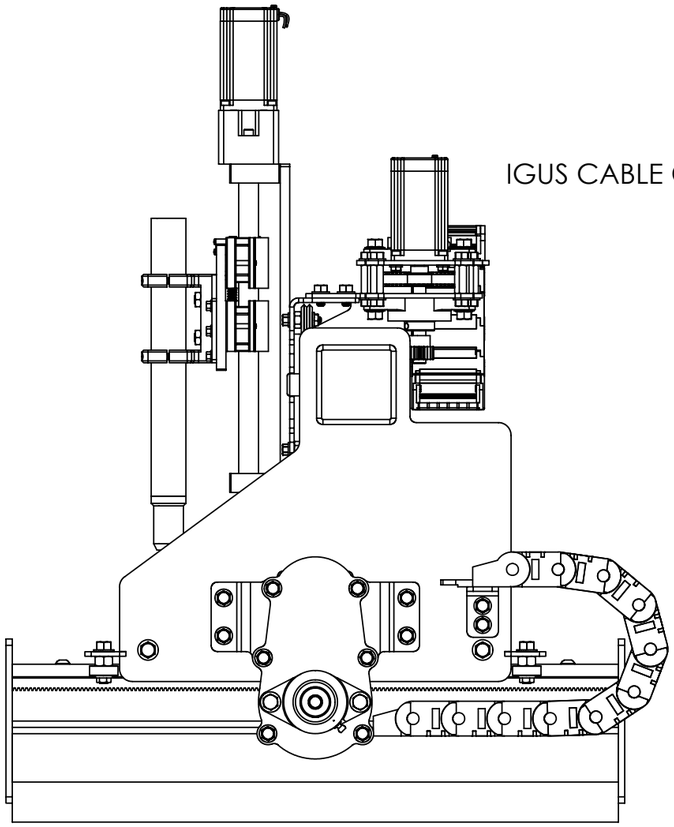

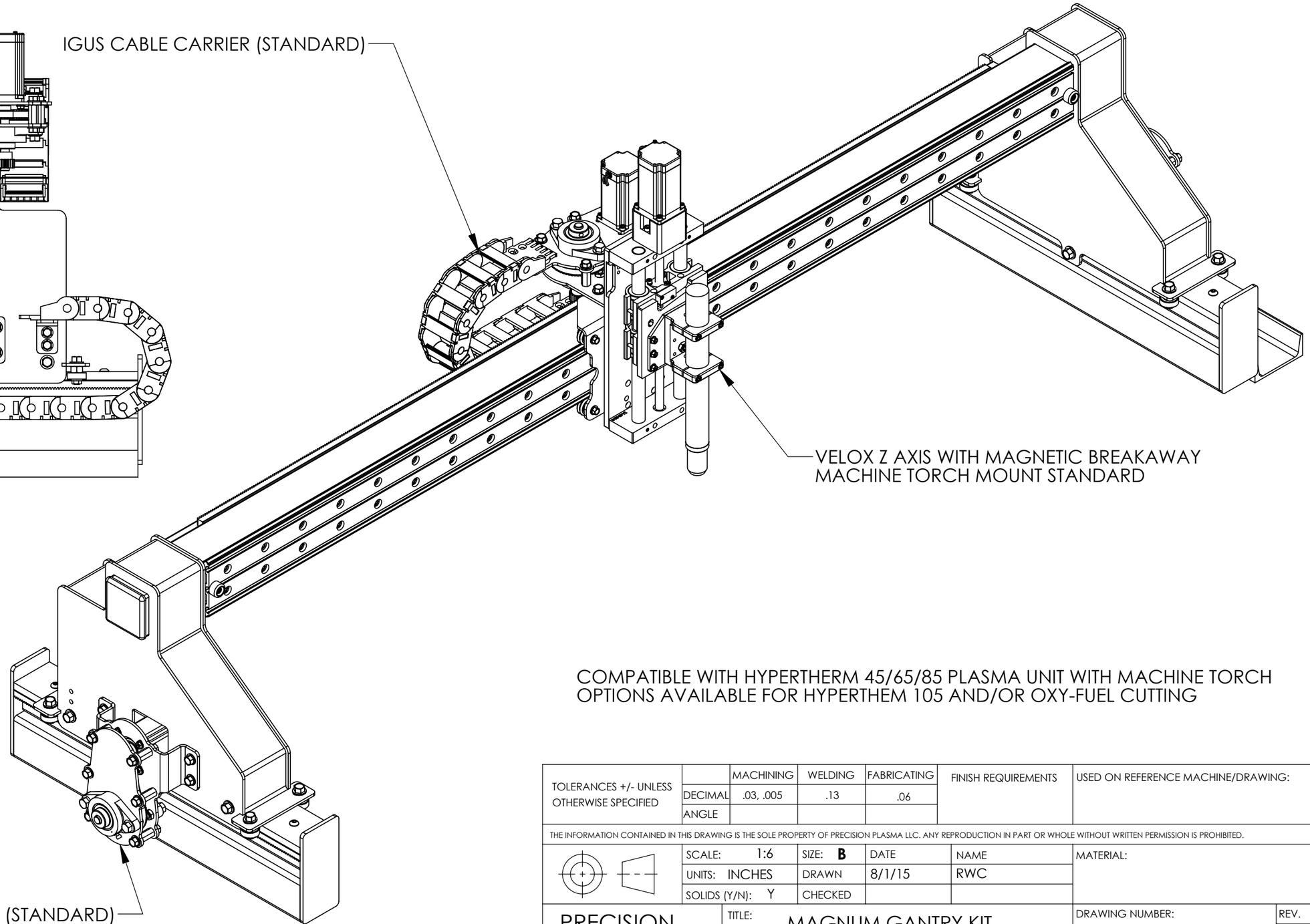

COMPATIBLE WITH HYPERTHERM 45/65/85 PLASMA UNIT WITH MACHINE TORCH
OPTIONS AVAILABLE FOR HYPERTHEM 105 AND/OR OXY-FUEL CUTTING

TOLERANCES +/- UNLESS OTHERWISE SPECIFIED		MACHINING	WELDING	FABRICATING	FINISH REQUIREMENTS	USED ON REFERENCE MACHINE/DRAWING:
	DECIMAL	.03, .005	.13	.06		
	ANGLE					

THE INFORMATION CONTAINED IN THIS DRAWING IS THE SOLE PROPERTY OF PRECISION PLASMA LLC. ANY REPRODUCTION IN PART OR WHOLE WITHOUT WRITTEN PERMISSION IS PROHIBITED.

SCALE: 1:6	SIZE: B	DATE	NAME	MATERIAL:	
UNITS: INCHES	DRAWN	8/1/15	RWC		
SOLIDS (Y/N): Y	CHECKED				

PRECISION PLASMA LLC.	TITLE: MAGNUM GANTRY KIT	DRAWING NUMBER: **MAGNUM II**	REV.
			SHEET 1 OF 1