A03 Team 3

Breeze Buddy

Hanna[1], Xintao[2], Vega[3], Alyssa[3]

[1]Mechanical Engineering, [2]Computer Engineering, [3]Civil Engineering

Introduction

- With increasing climate change temperatures keep rising each year
- For construction workers this is especially problematic, about 34-36% of all occupational heat related deaths in the US are construction workers [1]
- With an estimated 33,890 work-related heat injuries and illnesses between 2011 and 2020, this problem will only continue to grow as each summer gets hotter. [2]

Solution

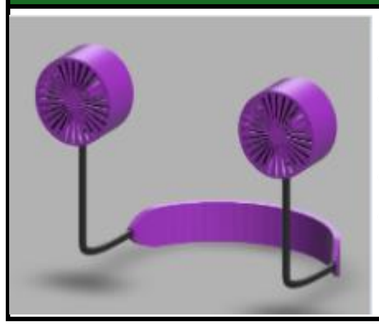

- Personal cooling fan
- Turns on based off body temperature
- Portable and lightweight
- Saves battery so it can last a full workday

Methods

•Designed a neckband model in CAD (Fusion 360) and 3D-printed it using PLA.

•Assembled a small DC fan, temperature sensor (TMP36), microcontroller, and battery pack.

- Programmed the microcontroller to turn the fan on once the sensor detected a preset body-temperature threshold.

References

[1] X. S. Dong, G. H. West, A. Holloway-Beth, X. Wang, and R. K. Sokas, "Heat-related deaths among construction workers in the United States," *American journal of industrial medicine*, vol. 62, no. 12, pp. 1047–1057, Dec. 2019, doi: 10.1002/ajim.23024.

[2] webfx-new, "OSHA's Heat Injury & Illness Prevention Rules for Employers," Poster Compliance Center. Accessed: Nov. 30, 2025. [Online]. Available: https://www.postercompliance.com/blog/what-is-oshas-position-on-heat-injury-and-illness-prevention/

Circuit Diagram

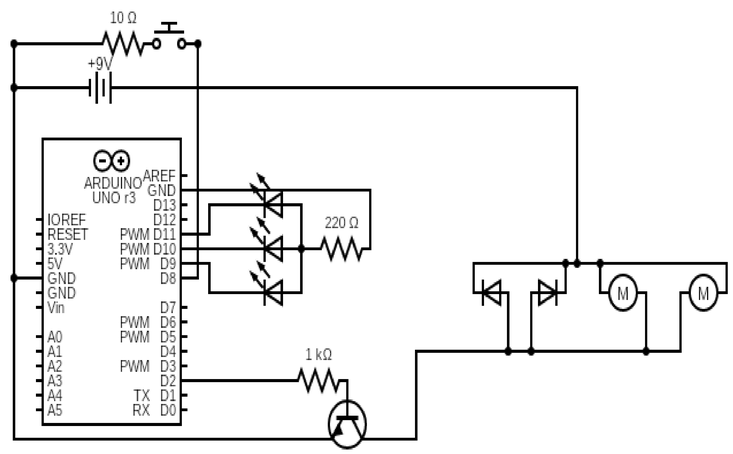

Logic Flow Diagram

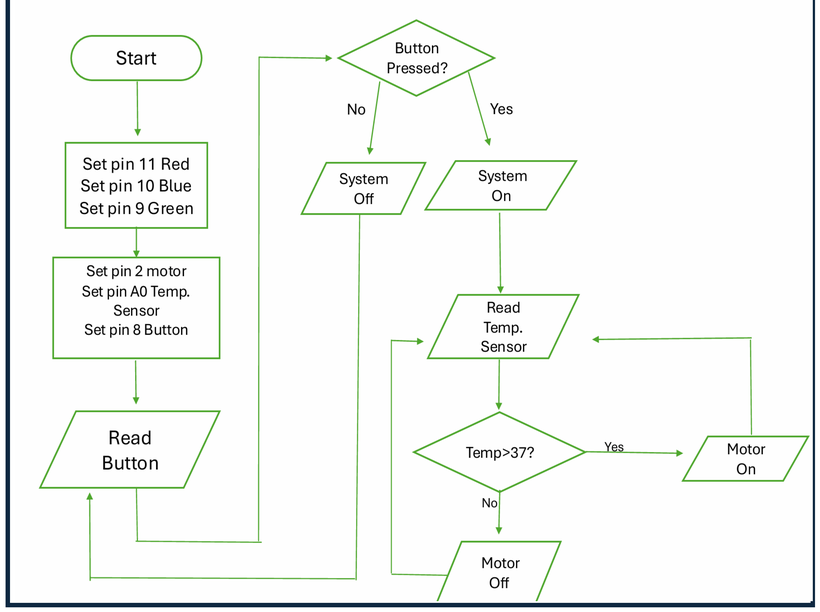

Test Results

•Temp sensor showed noise + readings slightly higher than room temp.

•Using one 9V battery caused voltage drops when the motor turned on.

•Neckband was noted as slightly heavy and

•uncomfortable for long wear.

Discussion of Test Results

•Averaging + offset improved temperature accuracy.

•Using two separate 9V batteries made the system stable.

•The stiff neckband reduced comfort, indicating the need for alternative materials.

Conclusion and Future Work

The model is still a work in progress and could be improved with:

- A better working body temperature sensor
- The neck band would be replaced by a breathable and bendable foam material
- Integrating the electrical components in a more discrete way
- An app where the user can personally set the threshold temperature

Acknowledgements

We want to thank the TA's Momchil Gavrilov and Yuankai Zhu for their support and ideas when iterating and developing our design.