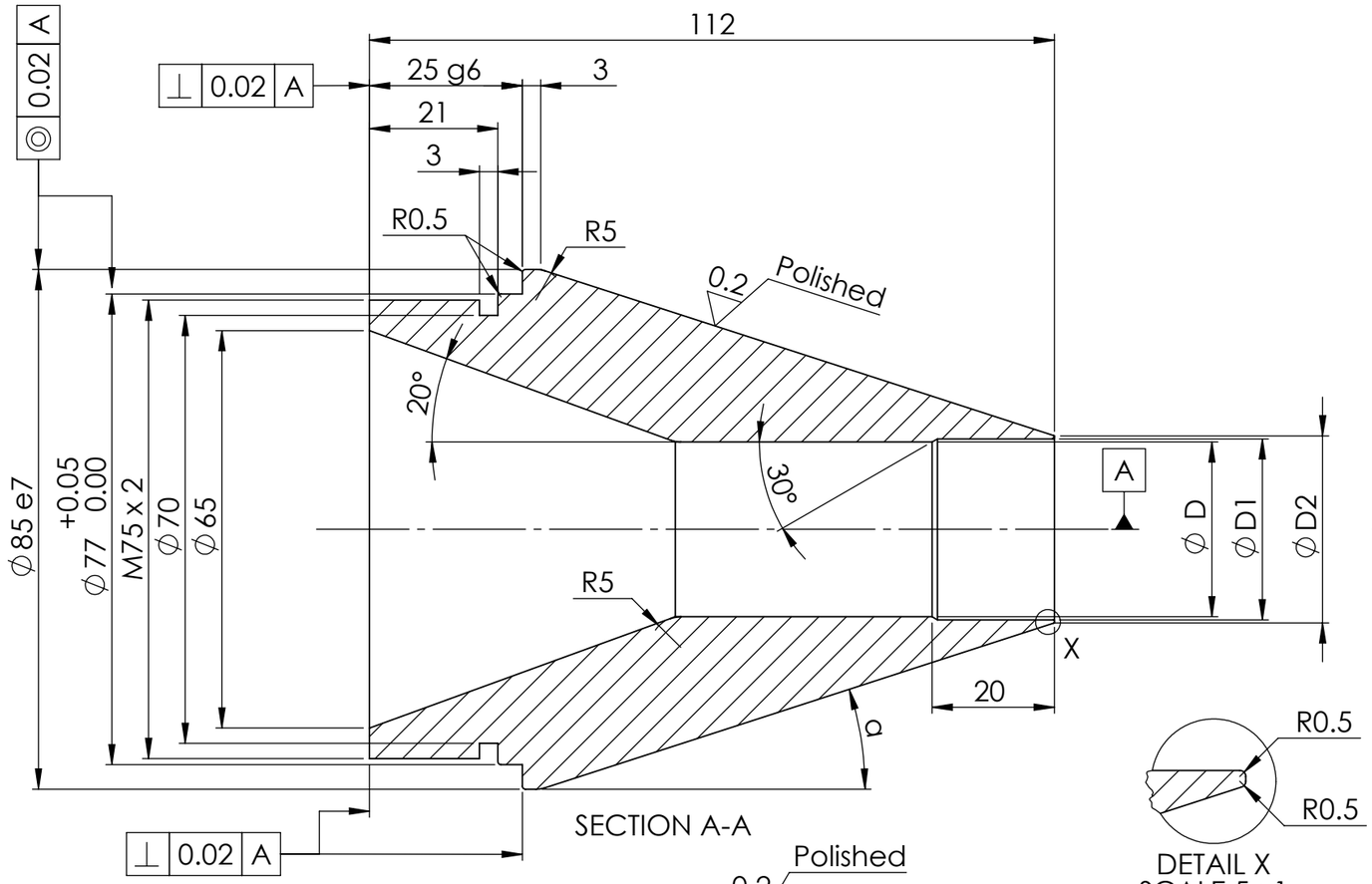

SECTION A-A

DETAIL X
SCALE 5 : 1

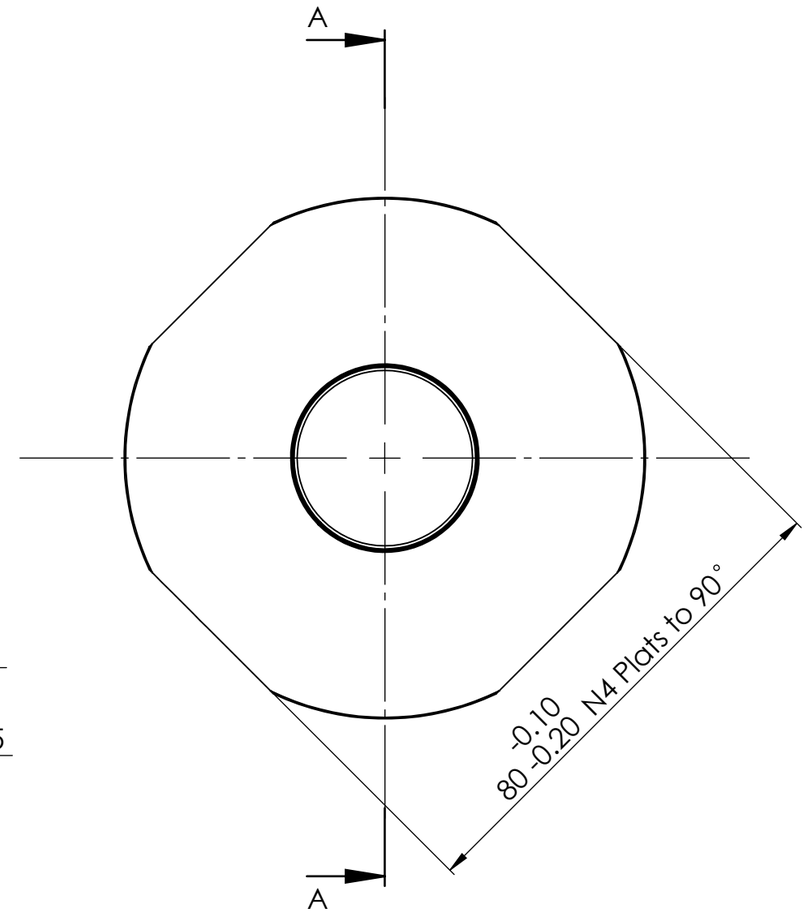

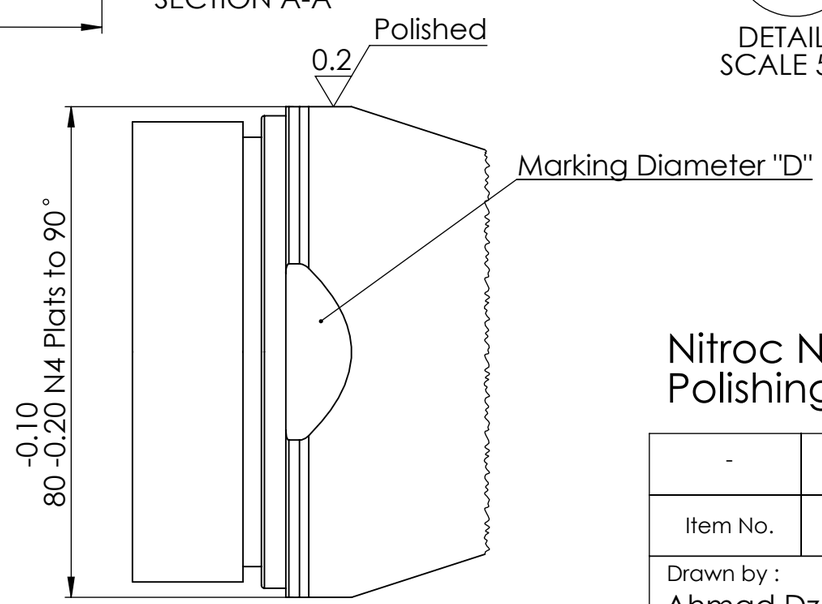

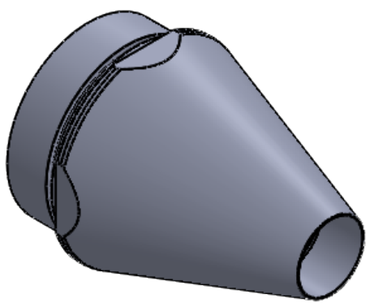

Nitroc Nitrided 4 Hours
Polishing After Nitrided

-	-	SKD61	-	-
Item No.	Description	Material	Quantity	Date

Drawn by : Ahmad Dzakwan	Title Core Die Semi-Tubing 60/70			
Checked by : Warliatna	Page -	Effective Date -	Machine Code No. -	Dimension -
Approved by : Salahuddin	Section / Owner -	Projection		
QC Acknowledge : -	Dimension mm	Scale None		

prysmian

No	Cable Desc	ØD	ØD1	ØD2	a	QYT

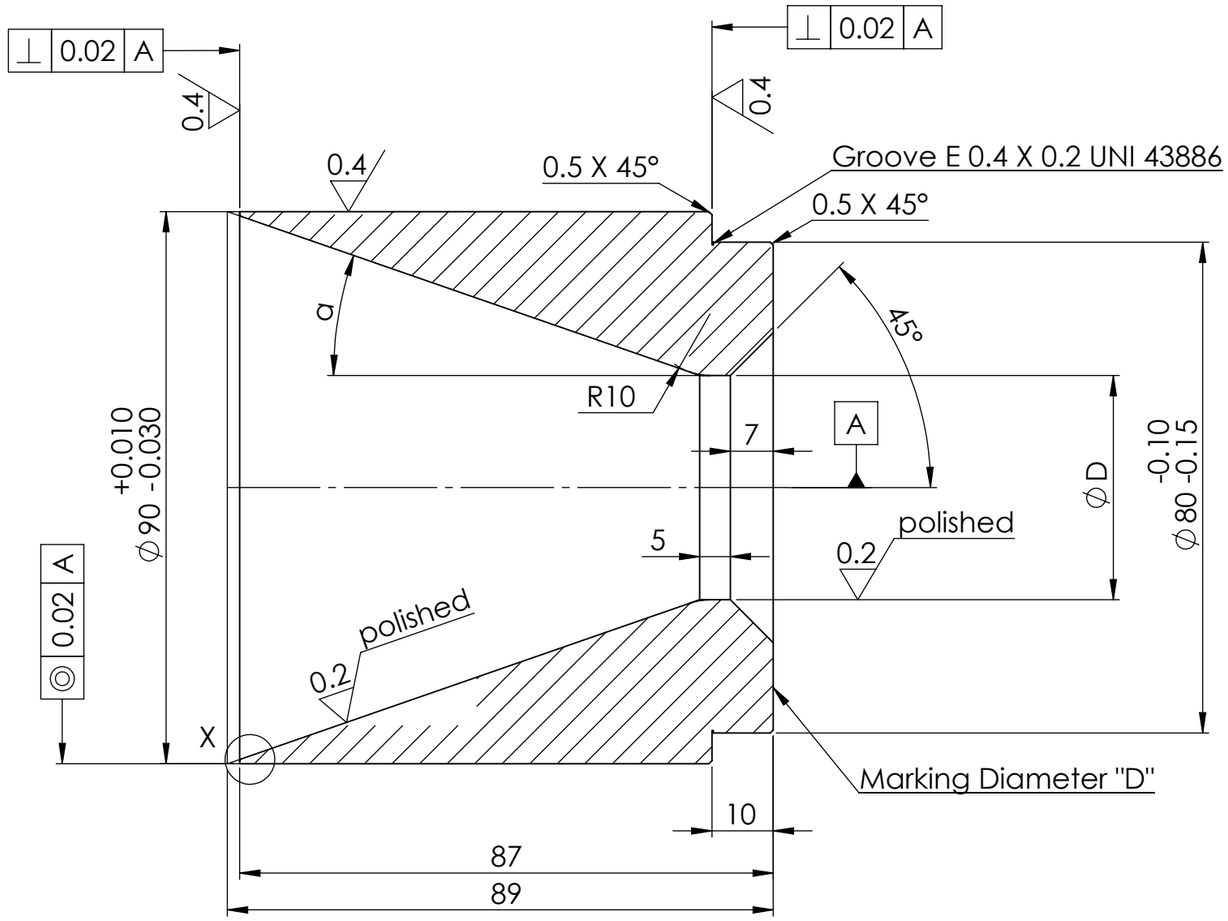

SECTION A-A

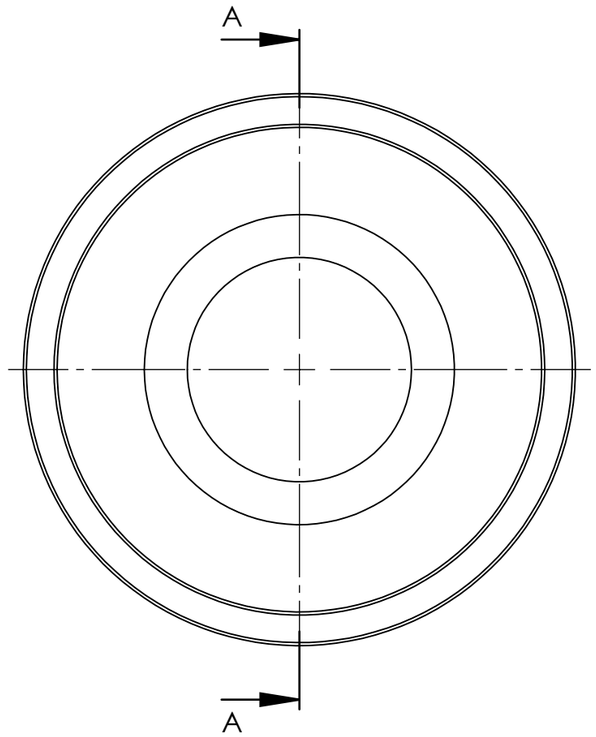

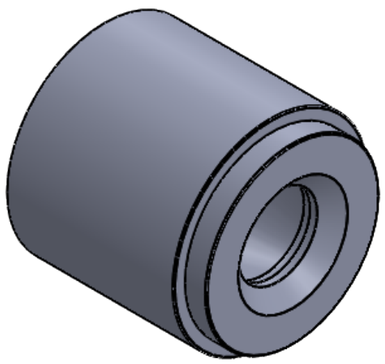

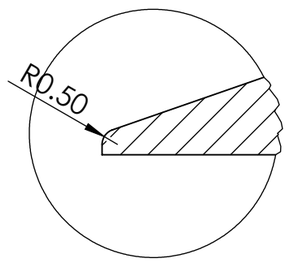

DETAIL X
SCALE 5 : 1

Nitroc Nitrided 4 Hours
Polishing After Nitrided

Item No.	Description	Material	Quantity	Date
-	-	SKD61	-	-

No	Cable Desc	ØD1	ØD2	ØD3	ØD4	a	QYT

Drawn by : Ahmad Dzakwan	Title Ring Die Semi Tubing 60/70			
Checked by : Warliatna	Page -	Effective Date -	Machine Code No. -	Dimension -
Approved by : Salahuddin	Section / Owner -	Projection		
QC Acknowledge : -	Dimension mm	Scale None		

prysmian