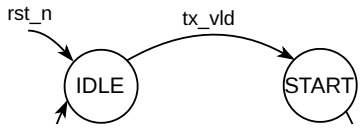
rst_n
tx_vld
IDLE
START

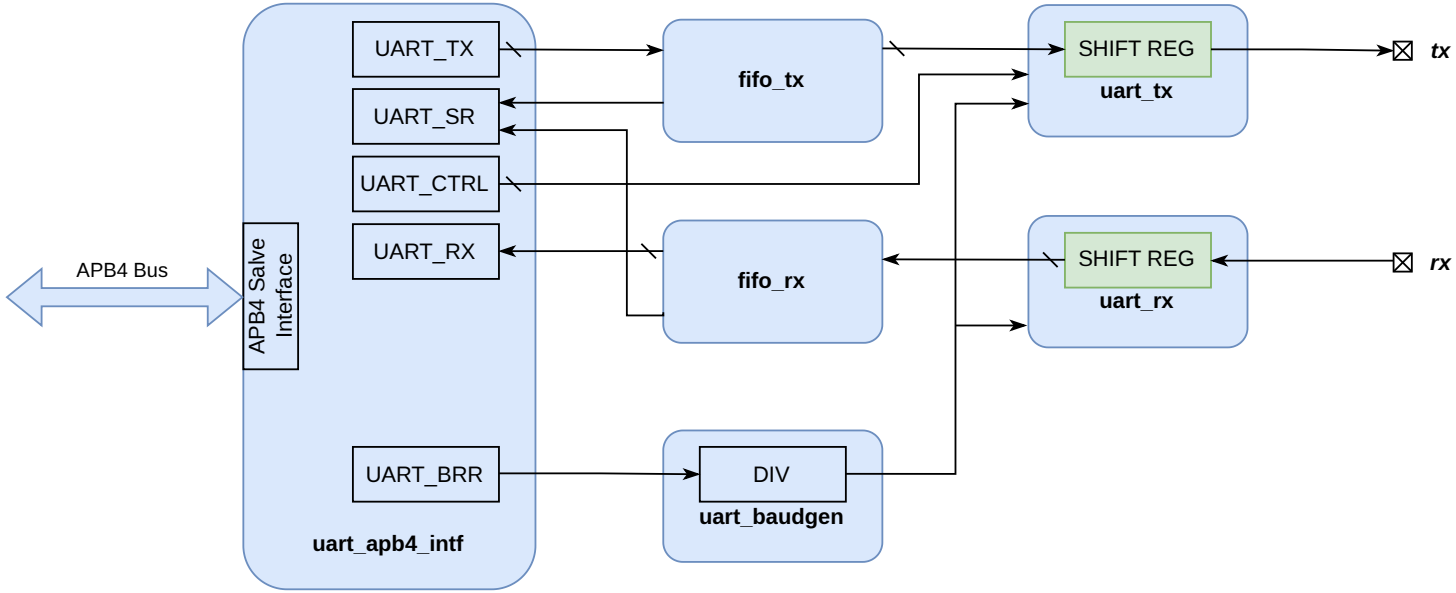
APB4 Bus
APB4 Salve Interface
UART_TX
UART_SR
UART_CTRL
UART_RX
UART_BRR
uart_apb4_intf
fifo_tx
fifo_rx
DIV
uart_baudgen
SHIFT REG
uart_tx
SHIFT REG
uart_rx
tx
rx

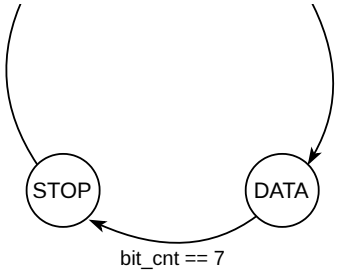
STOP
DATA
bit_cnt == 7

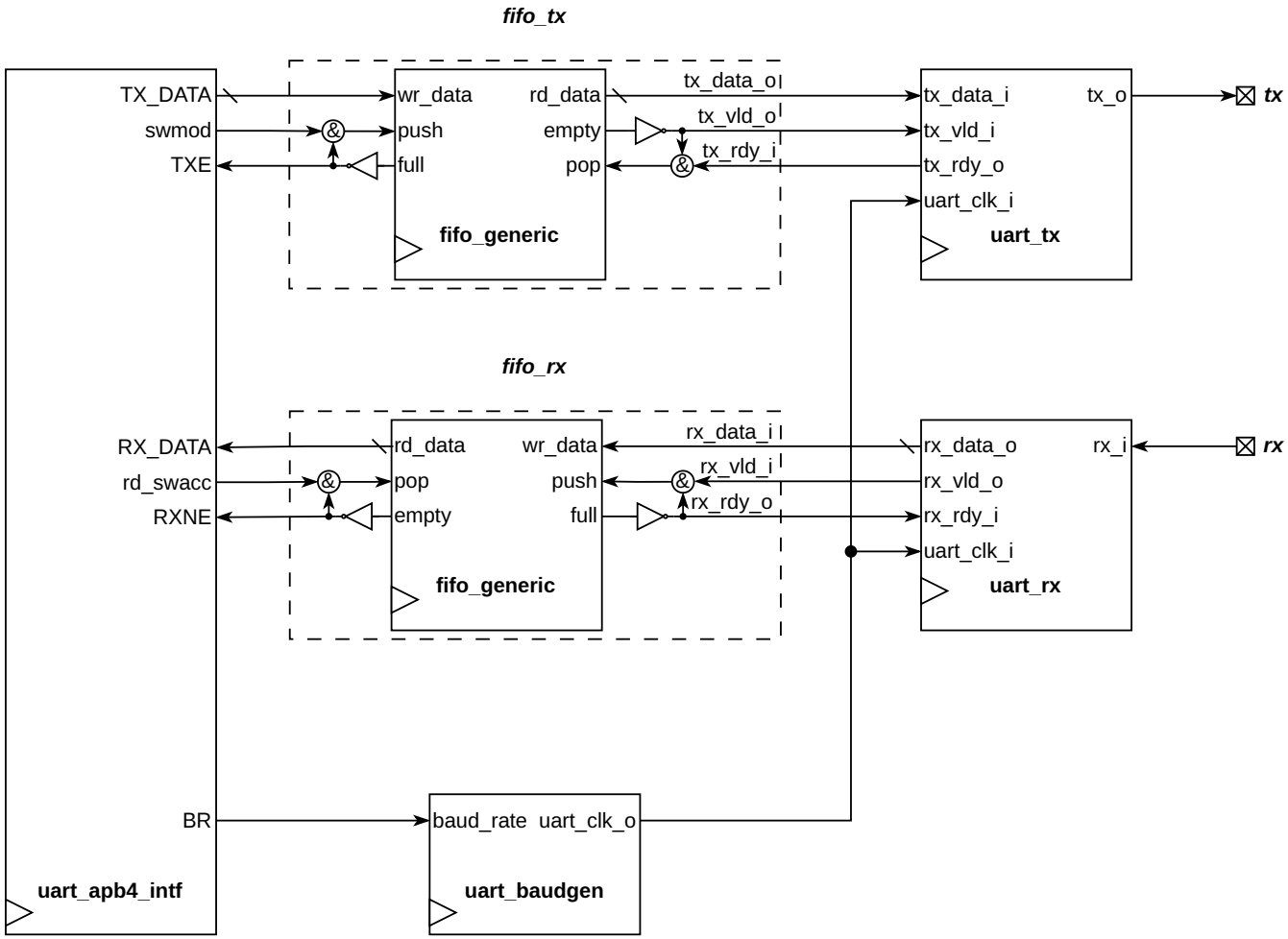
fifo_tx
TX_DATA
swmod
TXE
wr_data
push
full
rd_data
empty
pop
fifo_generic
tx_data_o
tx_vld_o
tx_rdy_i
tx_data_i
tx_vld_i
tx_rdy_o
uart_clk_i
tx_o
uart_tx
tx
fifo_rx
RX_DATA
rd_swacc
RXNE
rd_data
pop
empty
wr_data
push
full
fifo_generic
rx_data_i
rx_vld_i
rx_rdy_o
rx_data_o
rx_vld_o
rx_rdy_i
uart_clk_i
rx_i
uart_rx
rx
BR
baud_rate
uart_clk_o
uart_baudgen
uart_apb4_intf

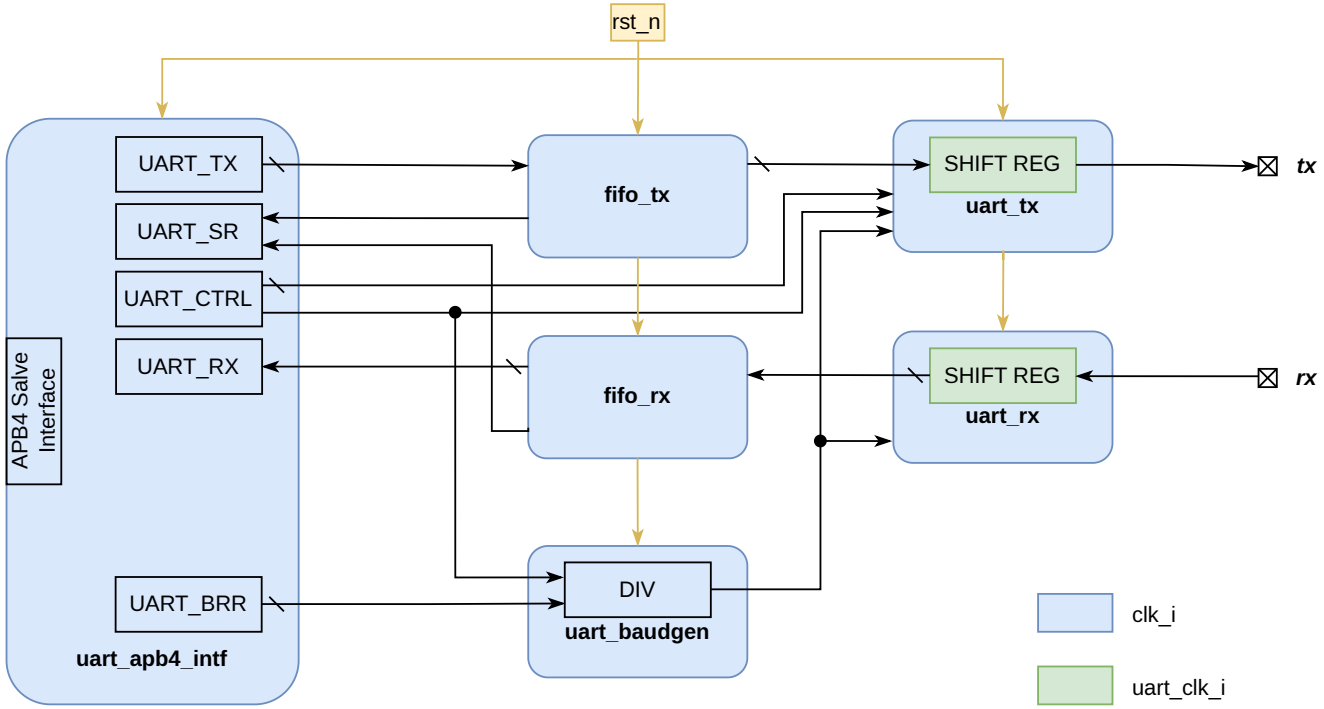
rst_n
UART_TX
UART_SR
UART_CTRL
UART_RX
UART_BRR
APB4 Salve Interface
uart_apb4_intf
fifo_tx
fifo_rx
DIV
uart_baudgen
SHIFT REG
uart_tx
SHIFT REG
uart_rx
tx
rx
clk_i
uart_clk_i

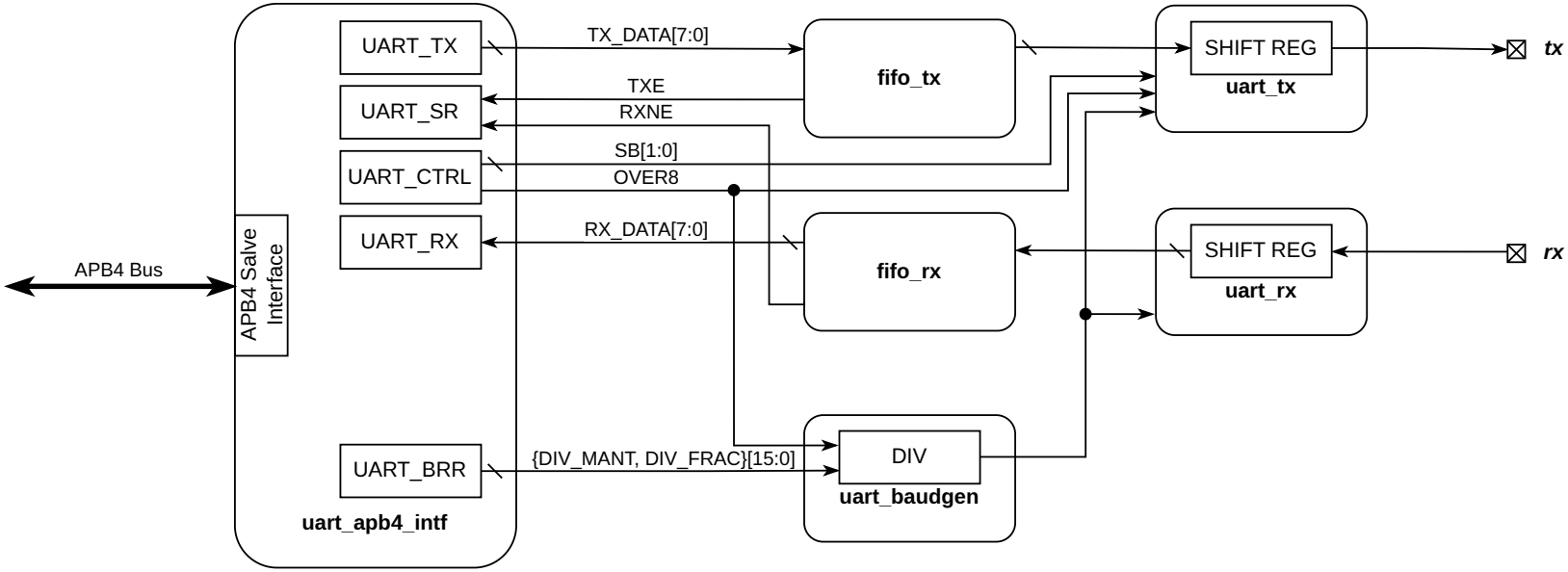
APB4 Bus
APB4 Salve Interface
UART_TX
UART_SR
UART_CTRL
UART_RX
UART_BRR
uart_apb4_intf
TX_DATA[7:0]
TXE
RXNE
SB[1:0]
OVER8
RX_DATA[7:0]
{DIV_MANT, DIV_FRAC}[15:0]
fifo_tx
fifo_rx
DIV
uart_baudgen
SHIFT REG
uart_tx
SHIFT REG
uart_rx
tx
rx