42163 Alternate - Tank

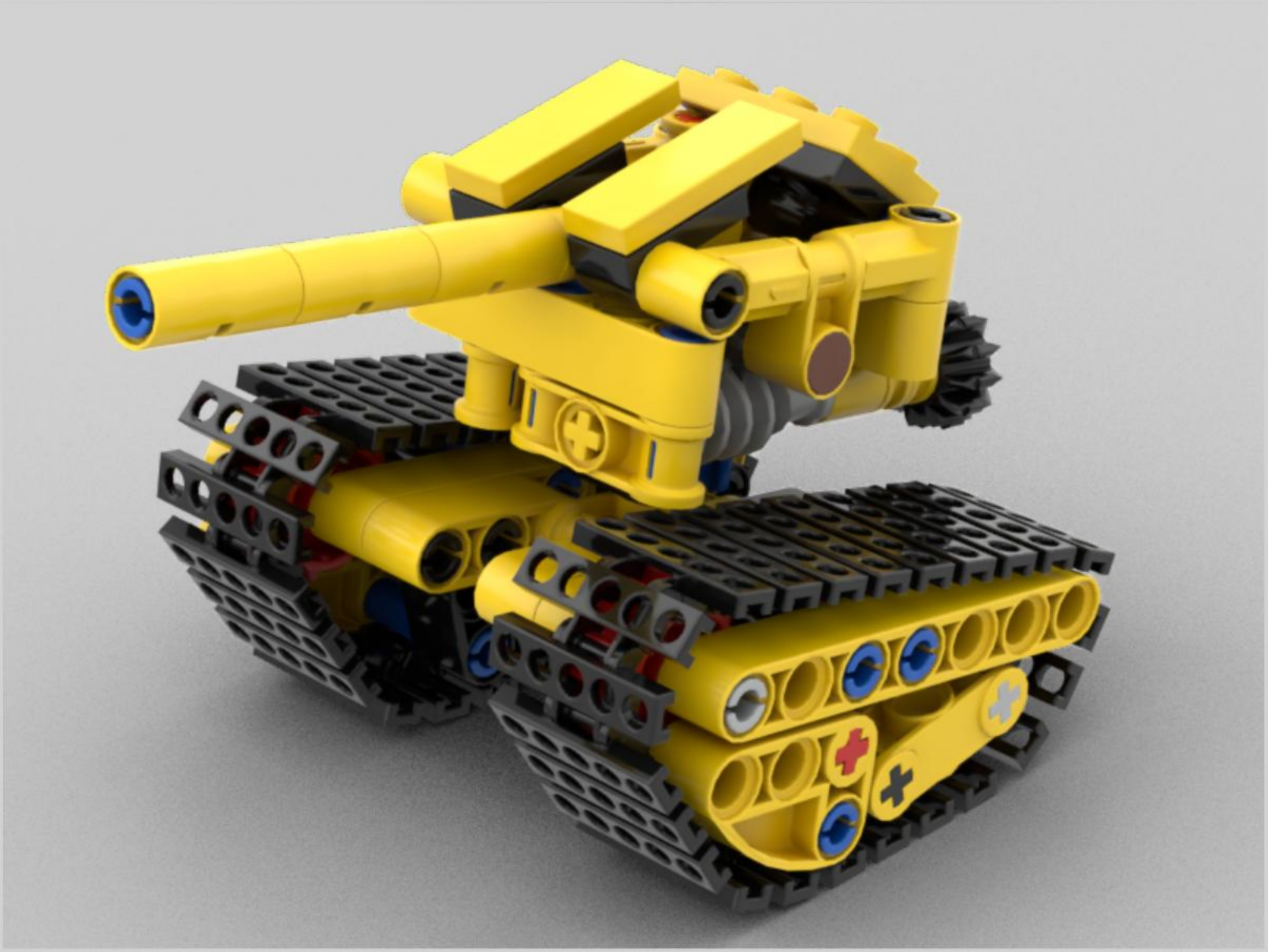

Model and instructions created by artemisovsky aka 0raD

1

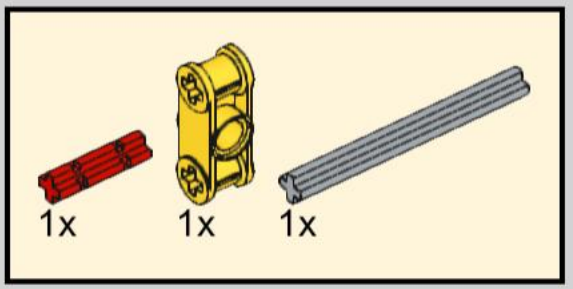

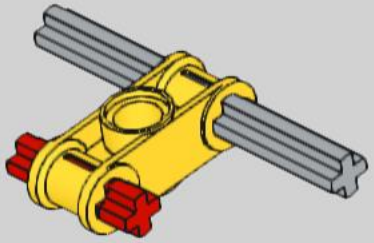

2

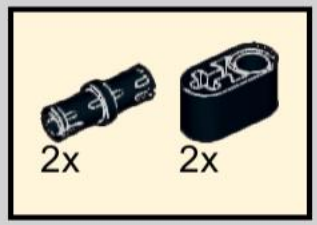

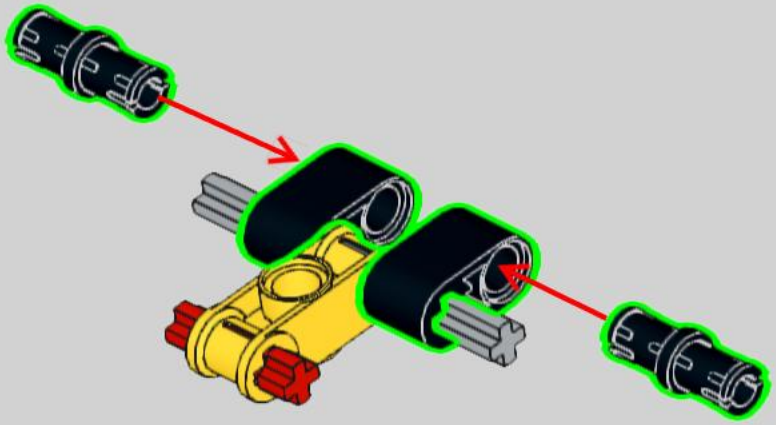

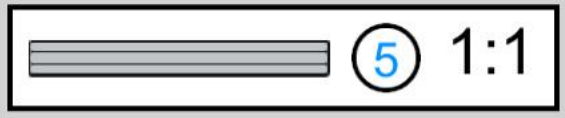

© Free instructions available at rebrickable.com. Instructions not for sale.

3

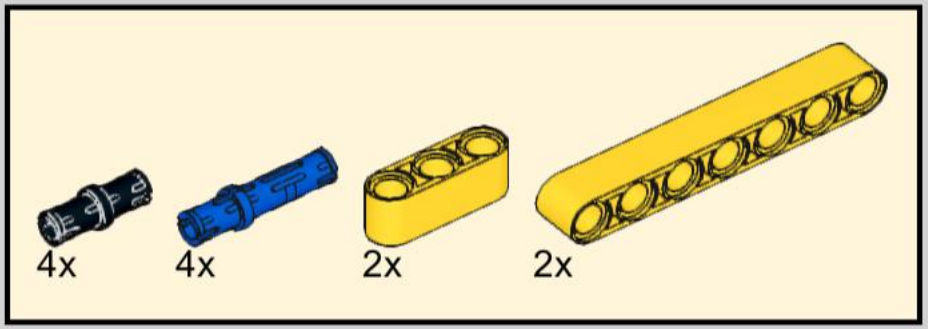

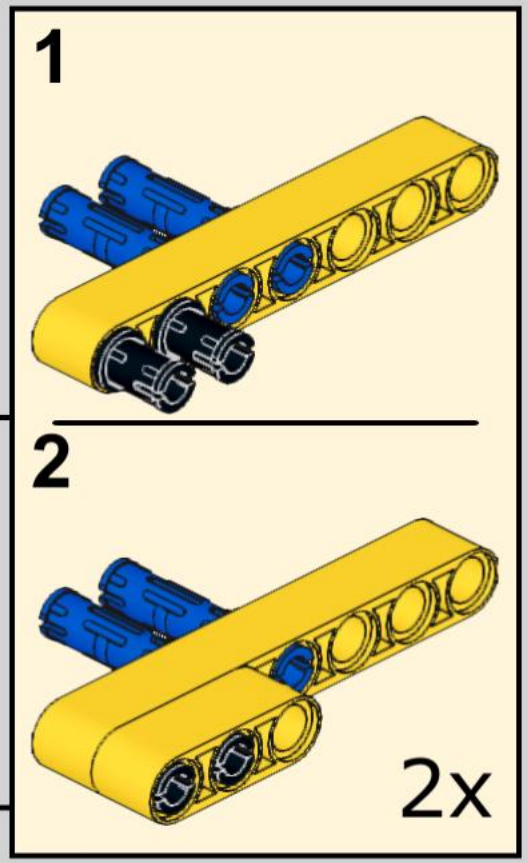

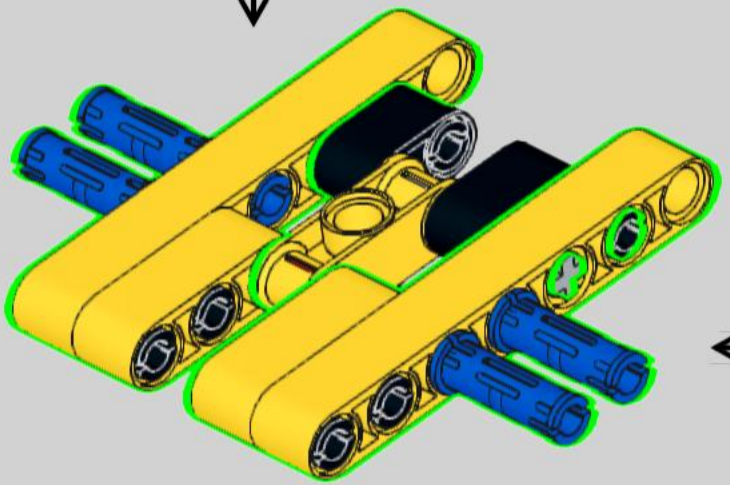

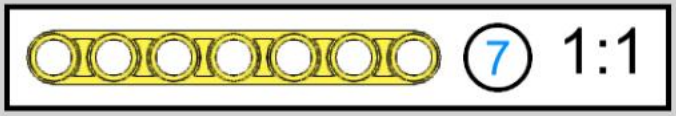

4

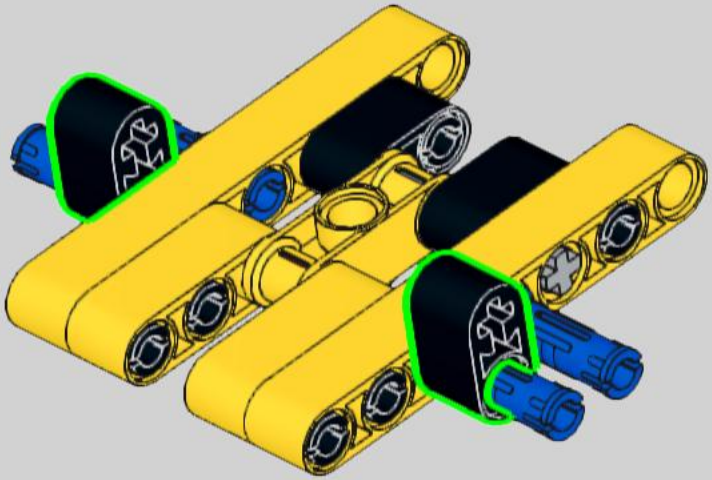

5

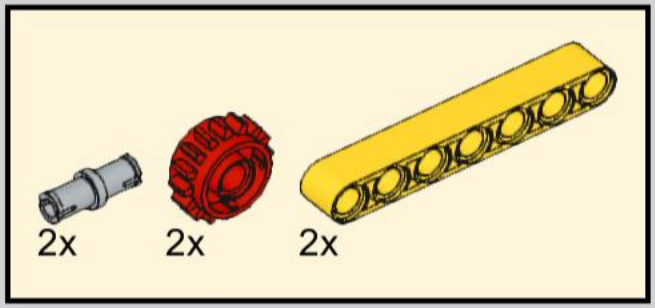

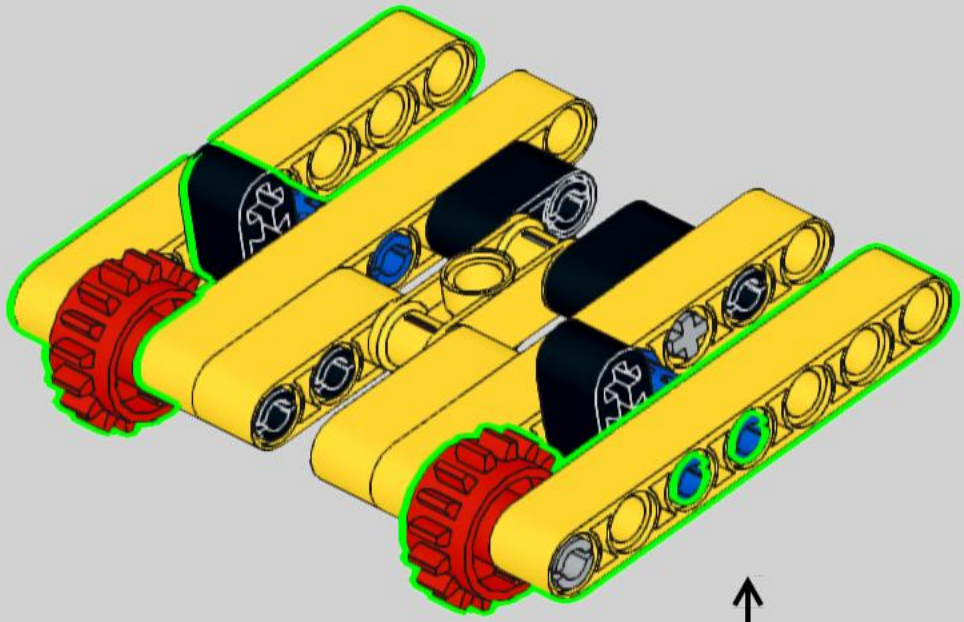

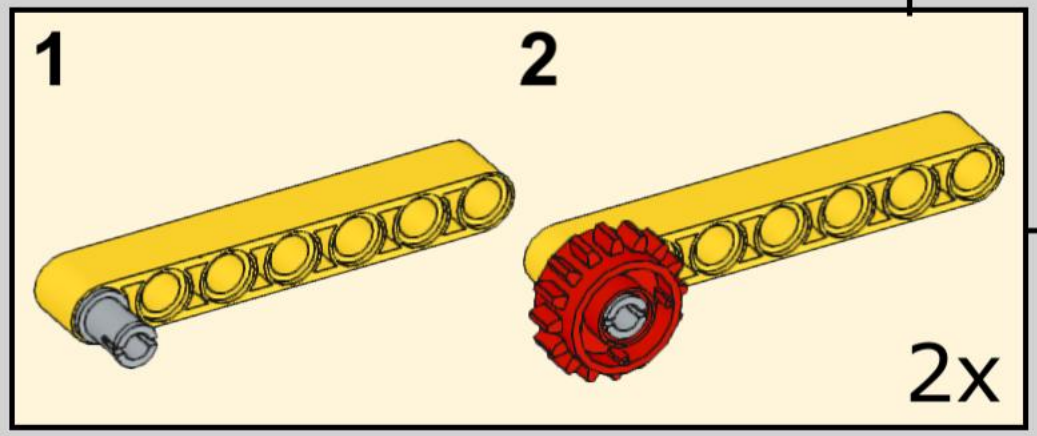

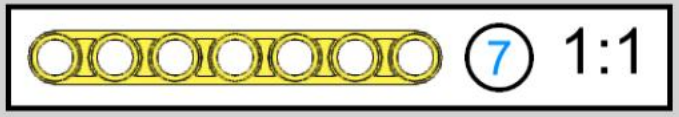

6

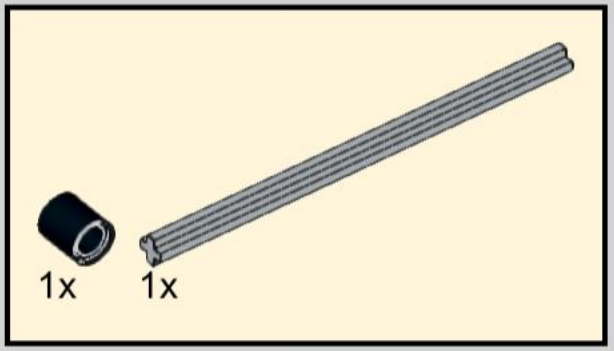

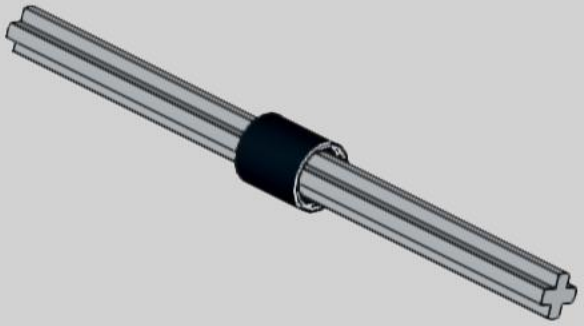

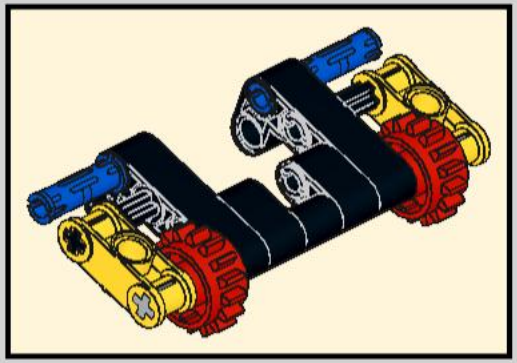

7

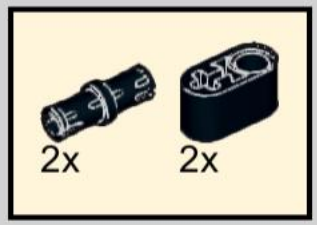

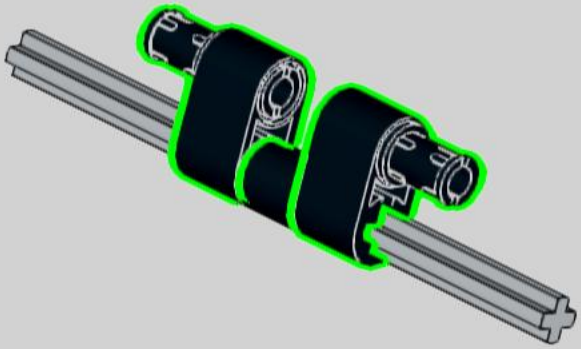

8

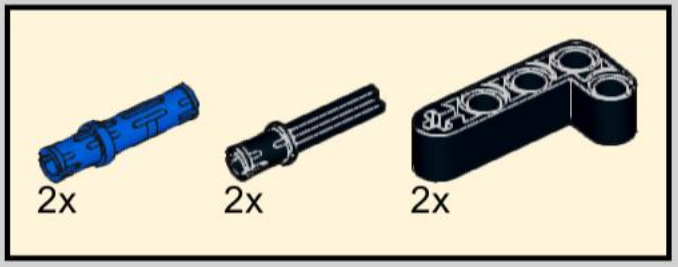

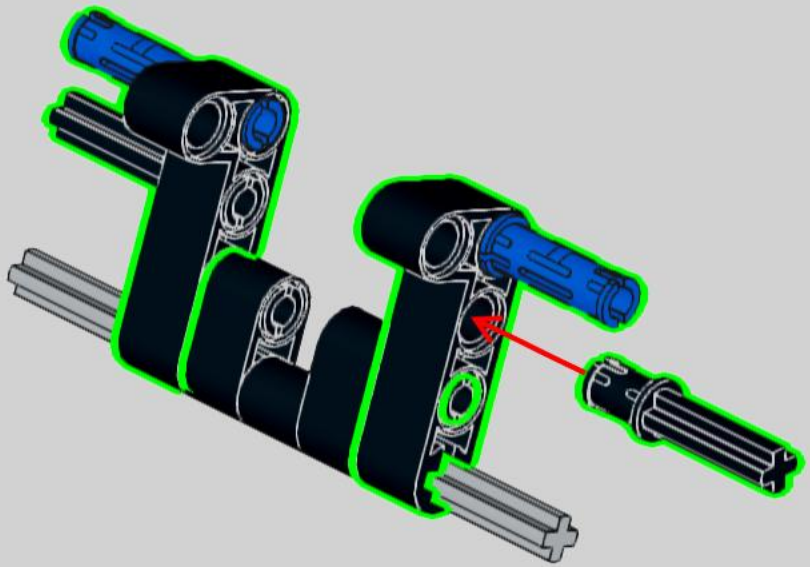

9

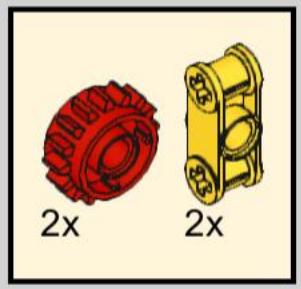

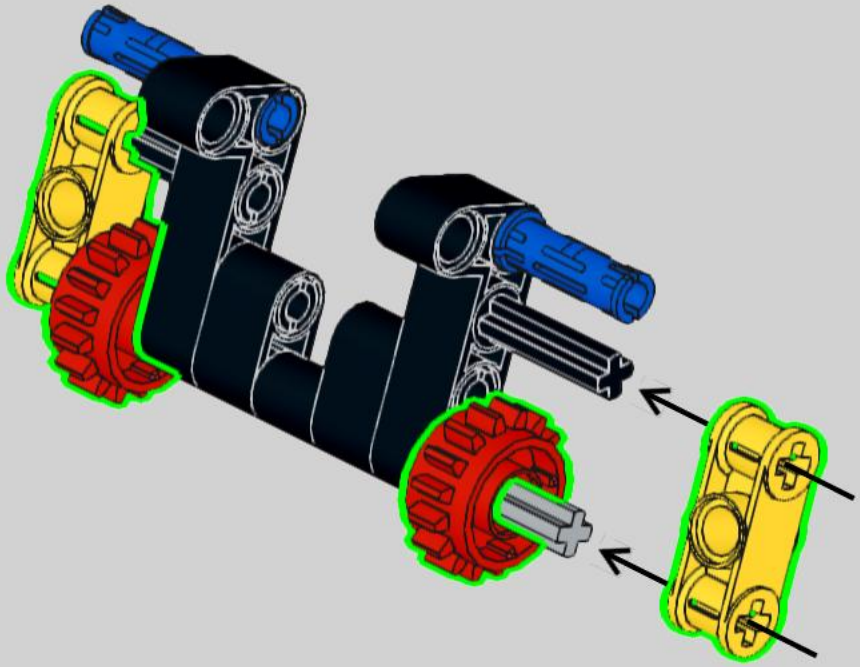

10

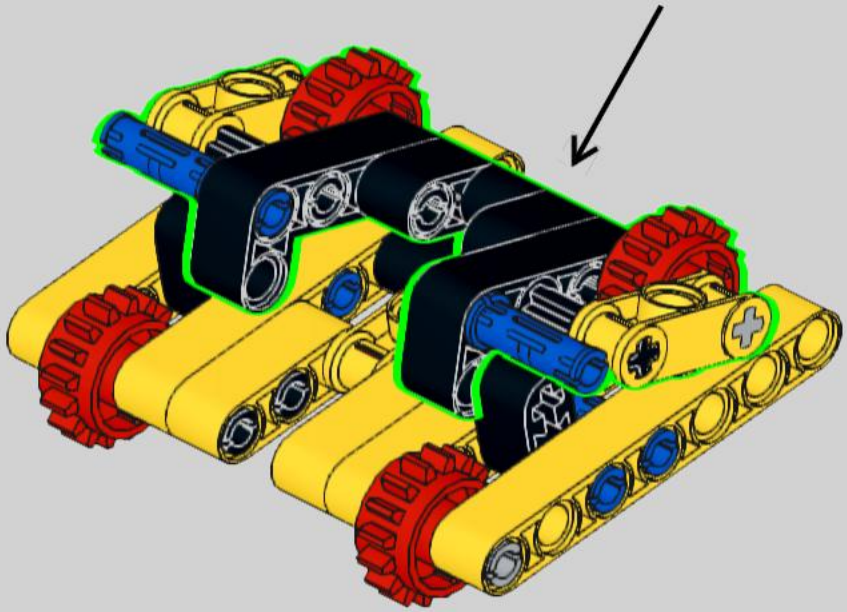

11

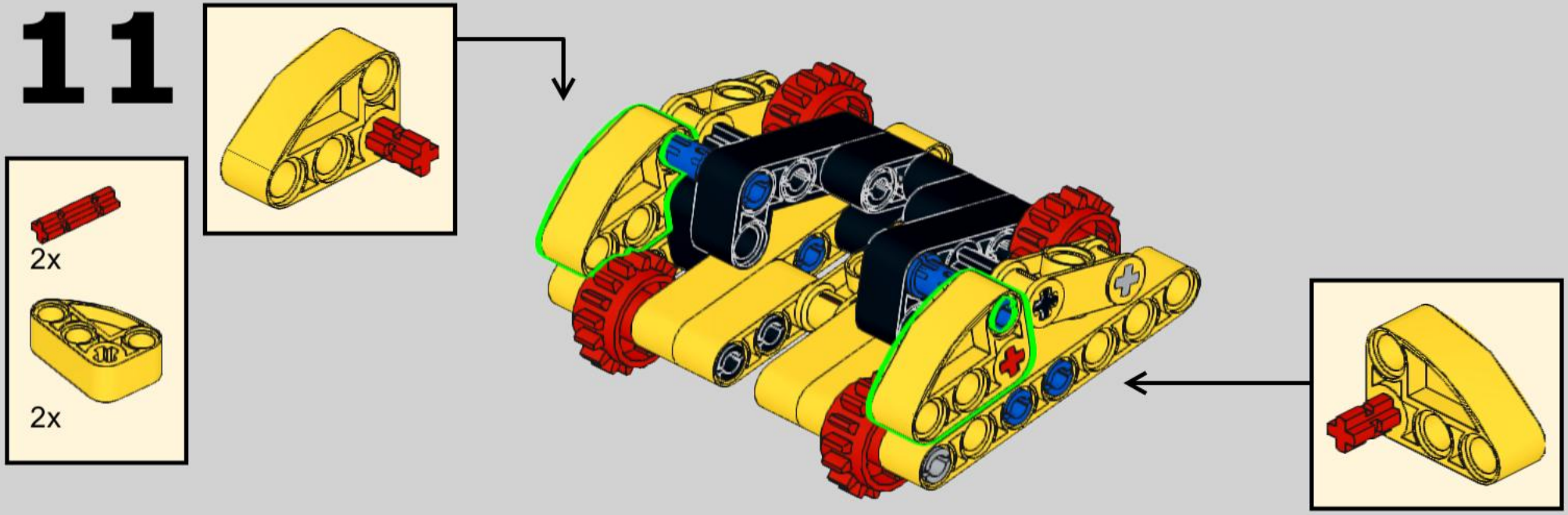

12

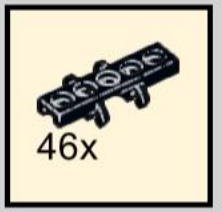

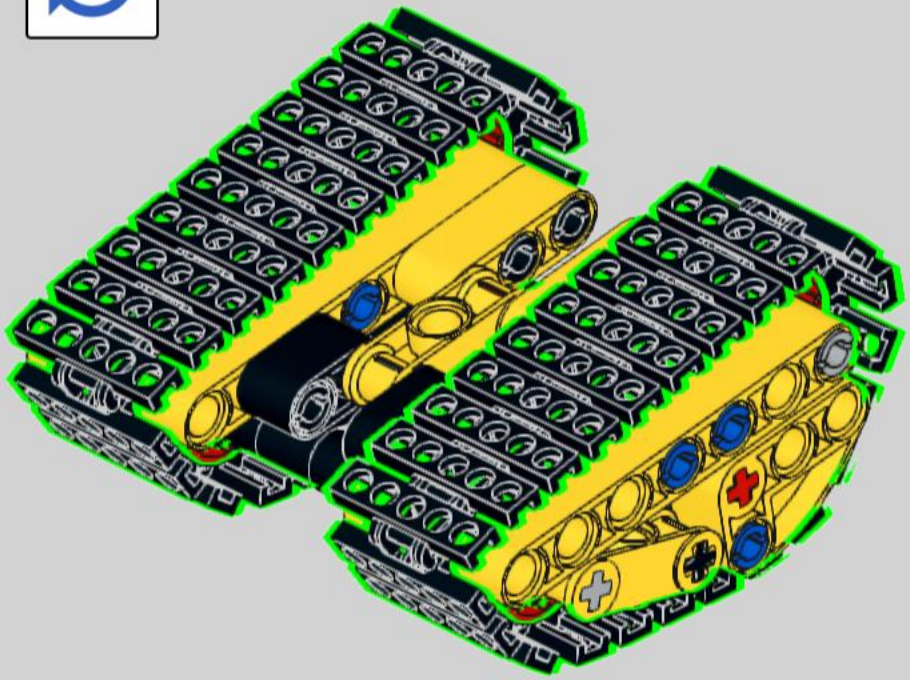

© Free instructions available at rebrickable.com. Instructions not for sale.

13

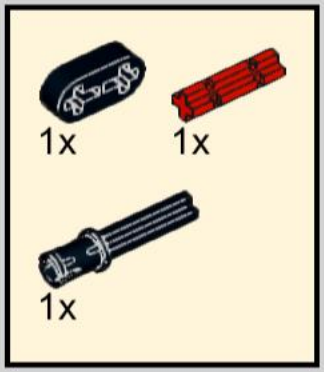

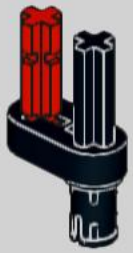

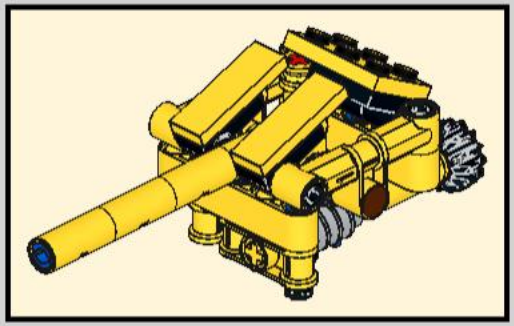

14

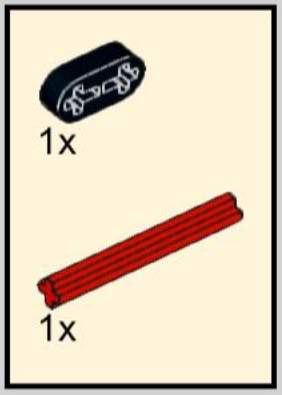

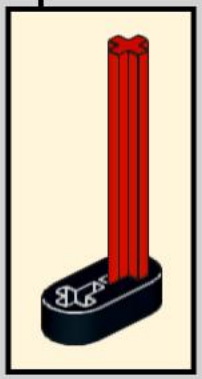

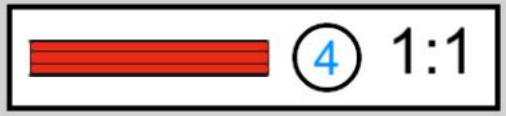

15

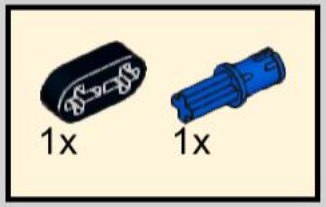

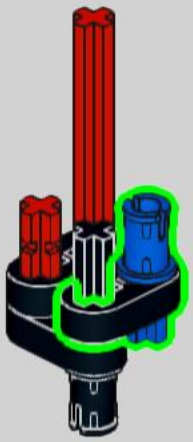

16

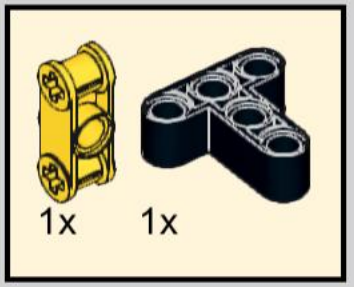

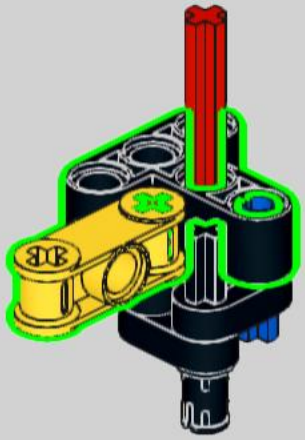

17

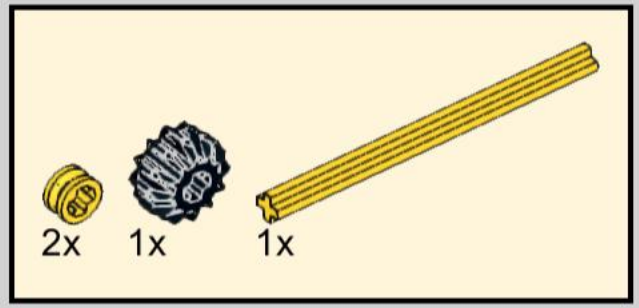

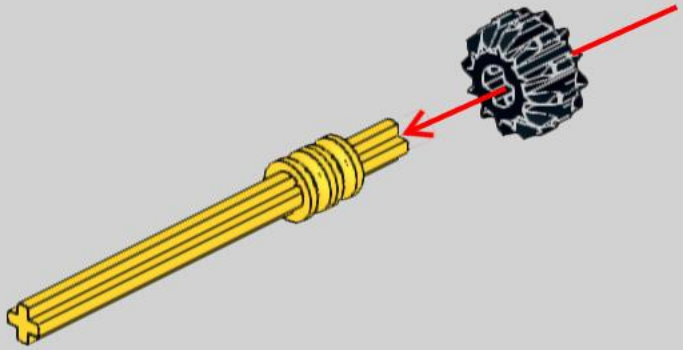

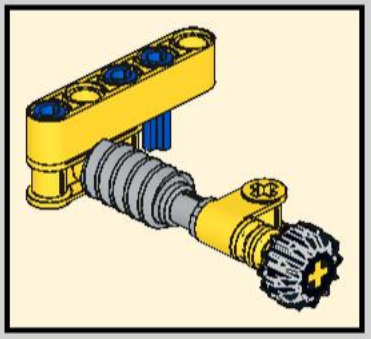

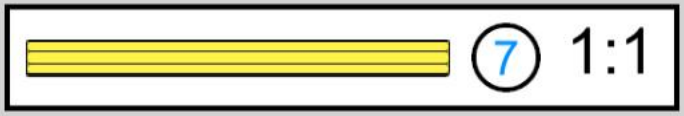

18

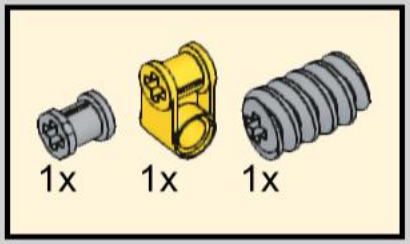

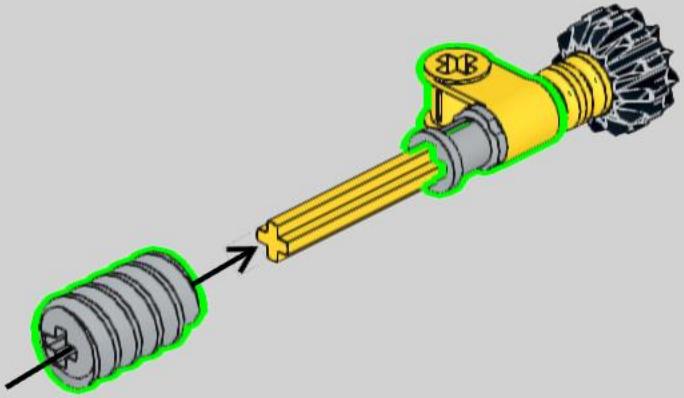

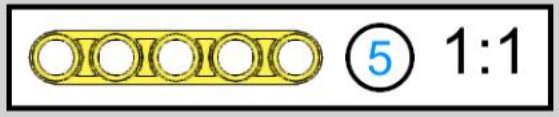

19

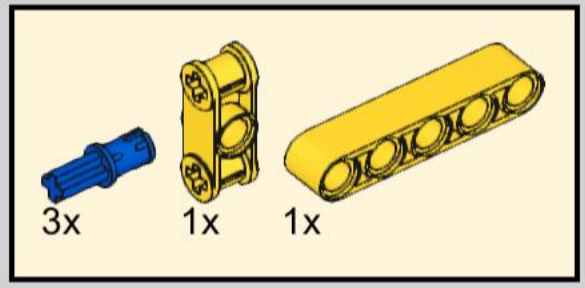

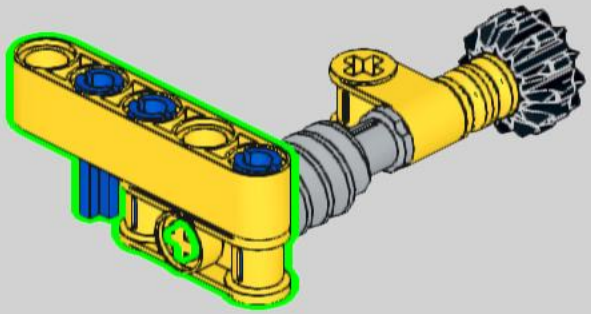

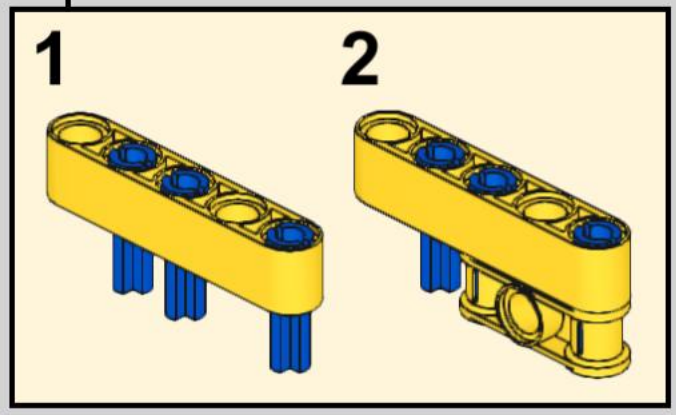

20

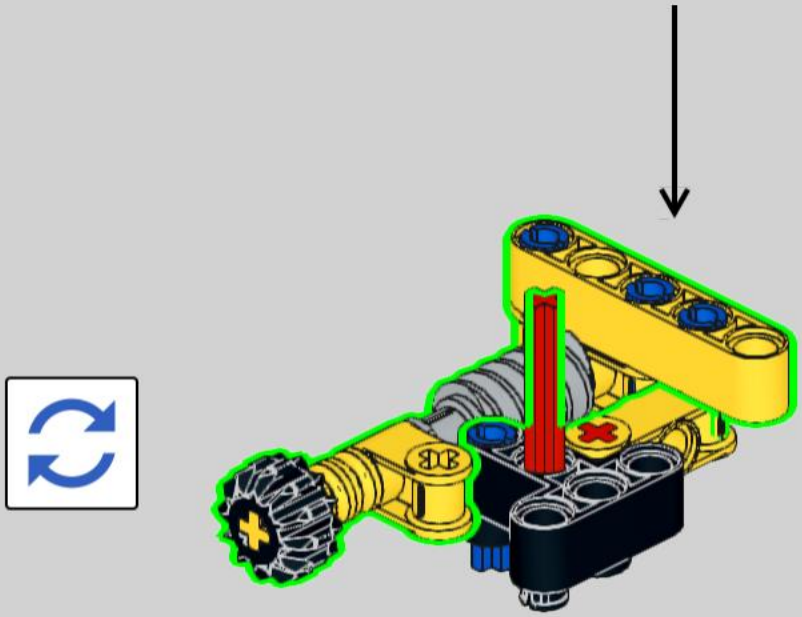

21

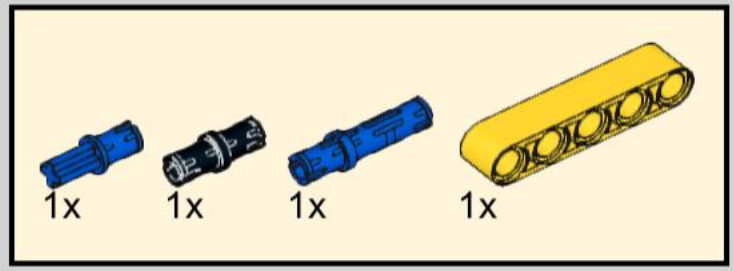

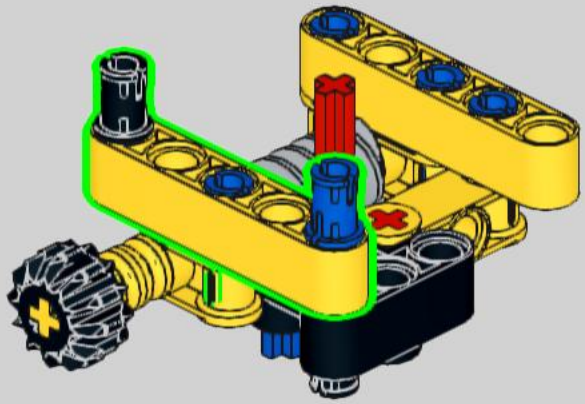

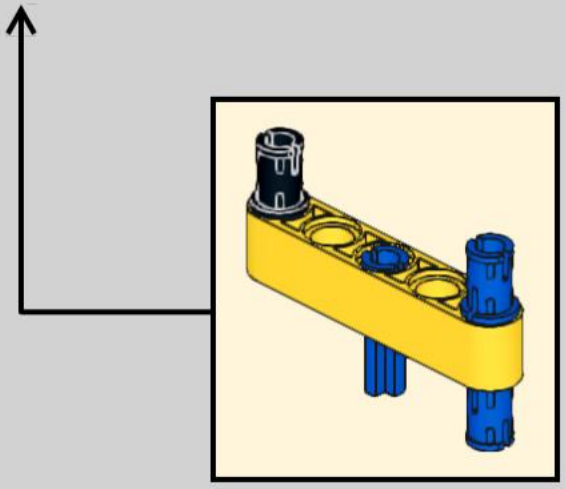

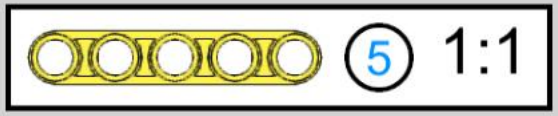

22

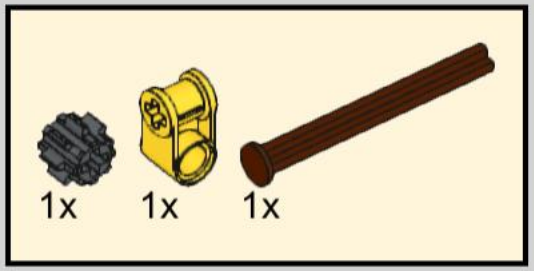

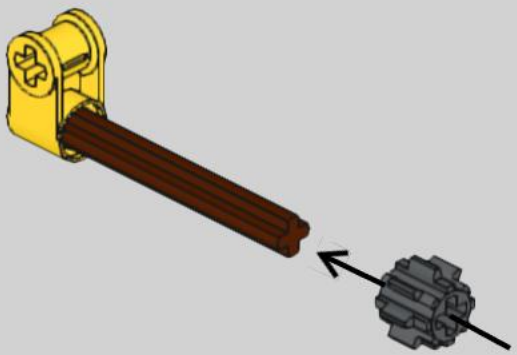

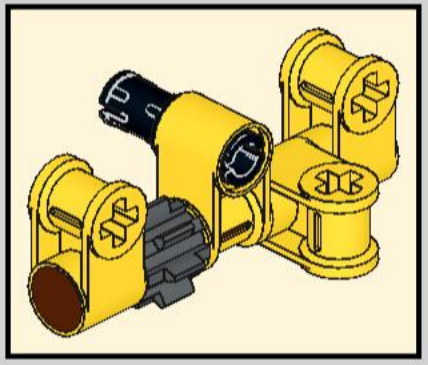

23

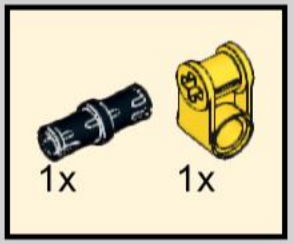

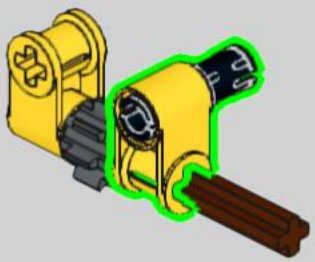

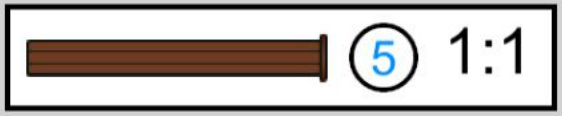

24

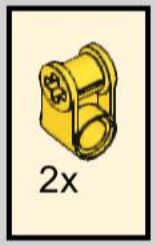

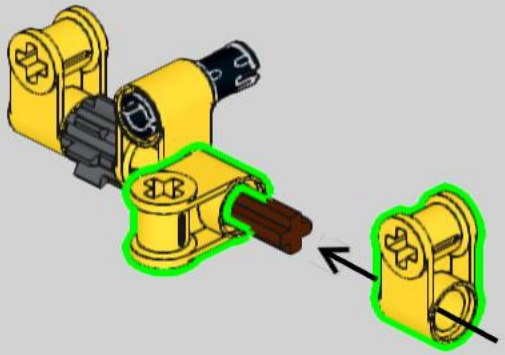

25

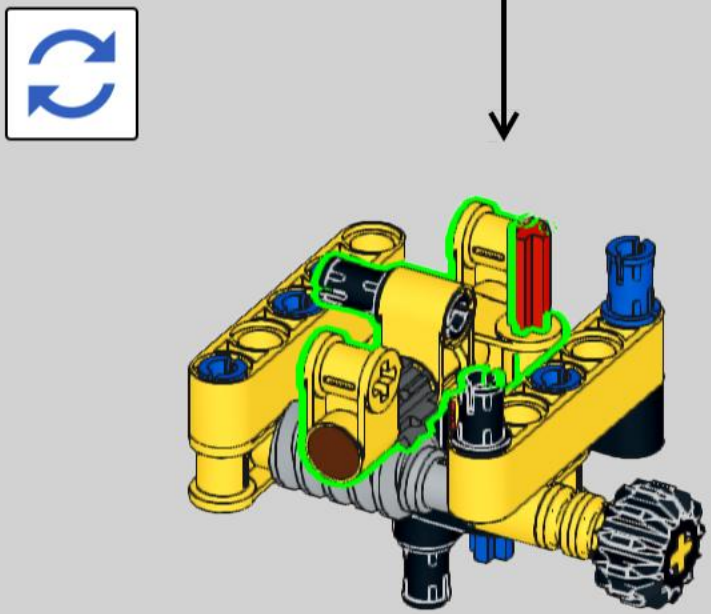

26

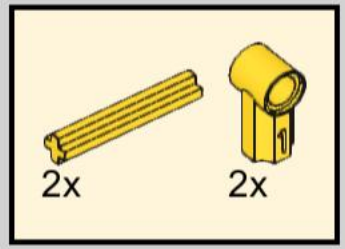

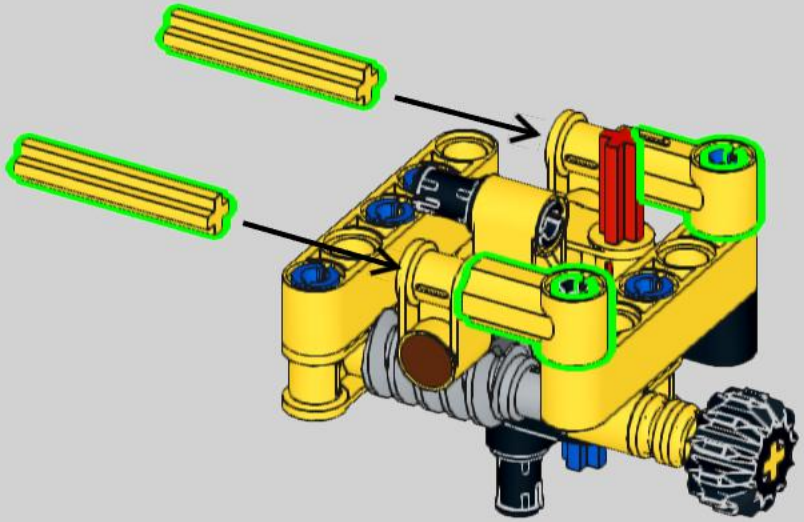

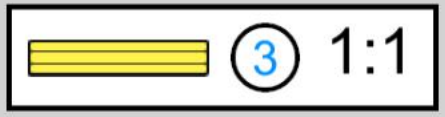

27

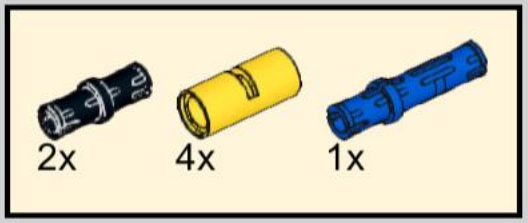

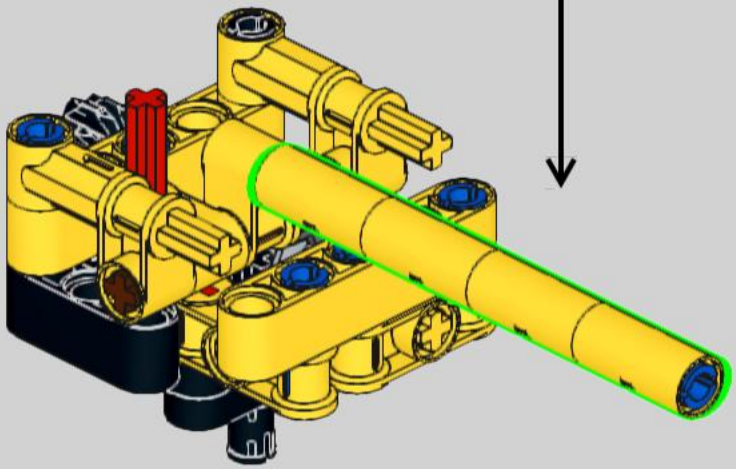

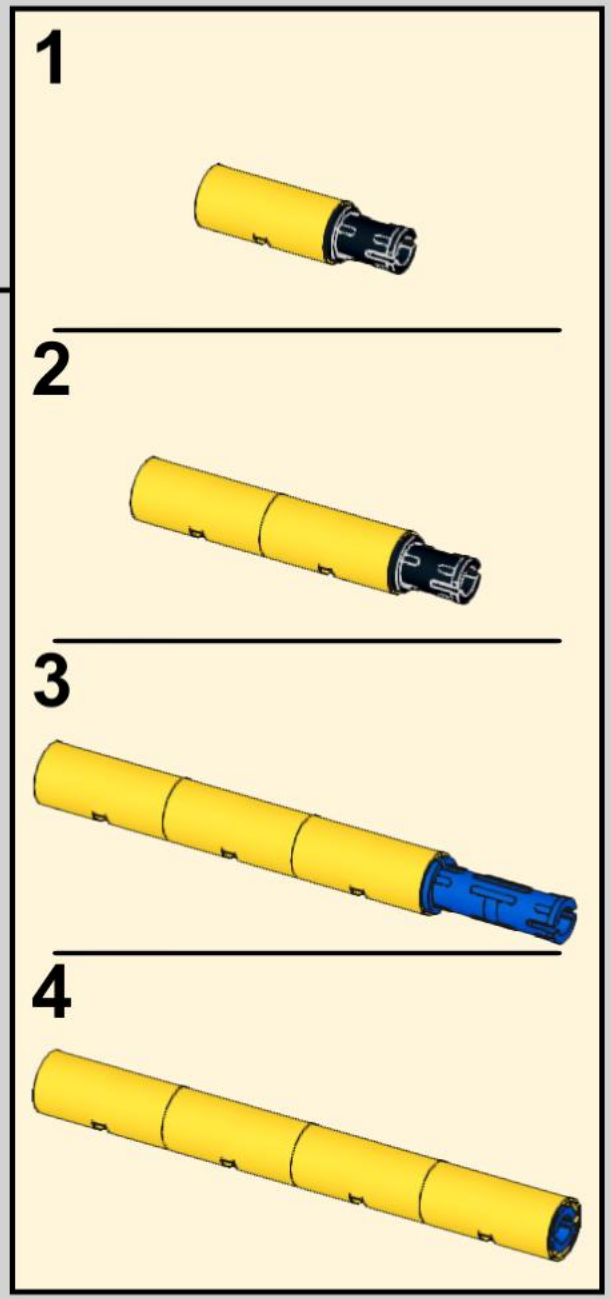

28

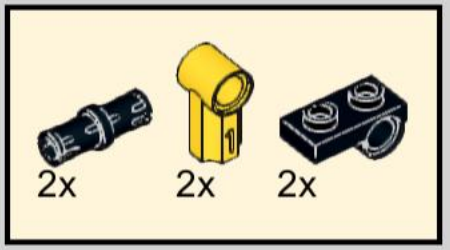

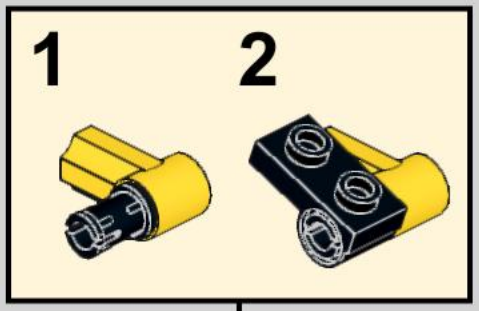

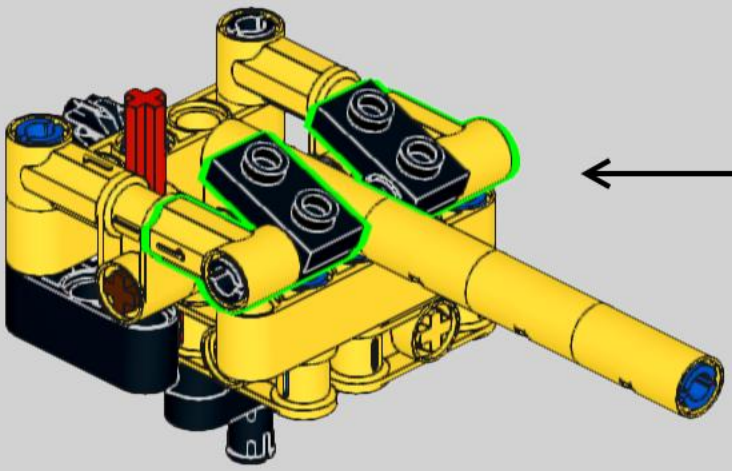

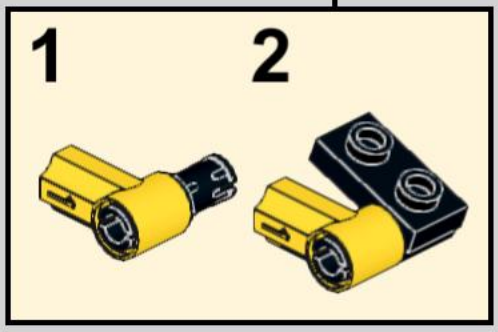

29

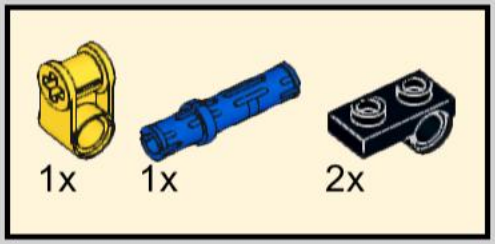

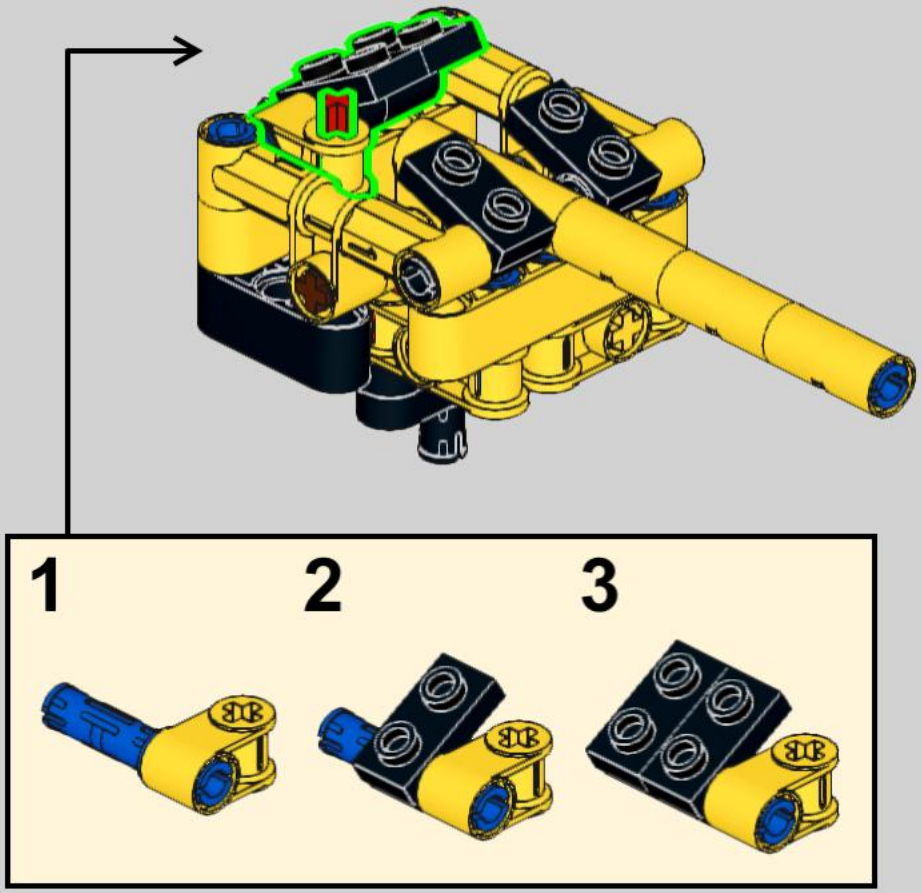

30

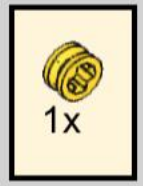

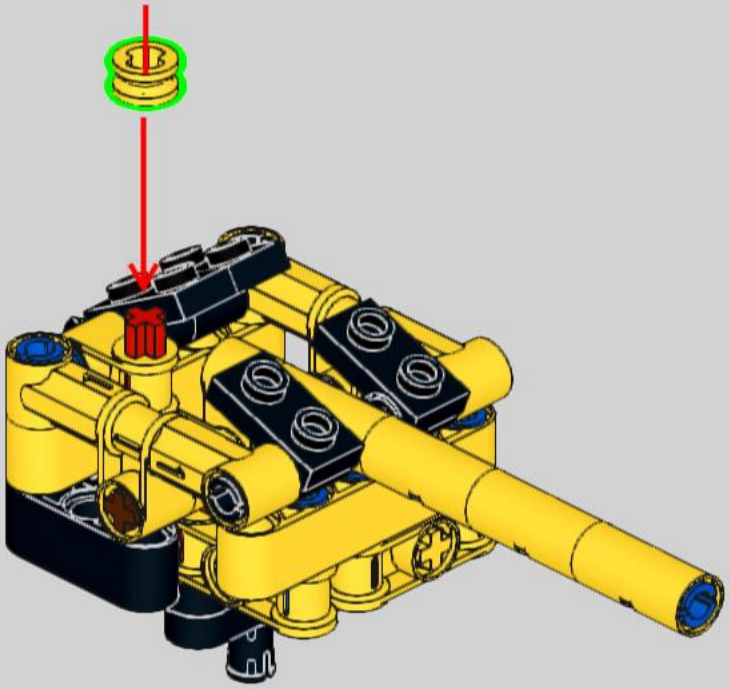

31

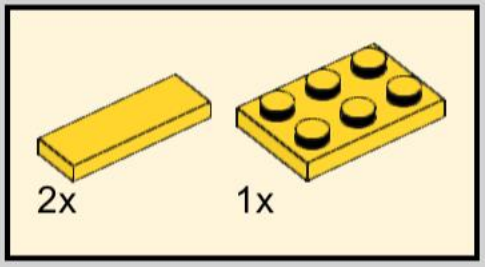

32

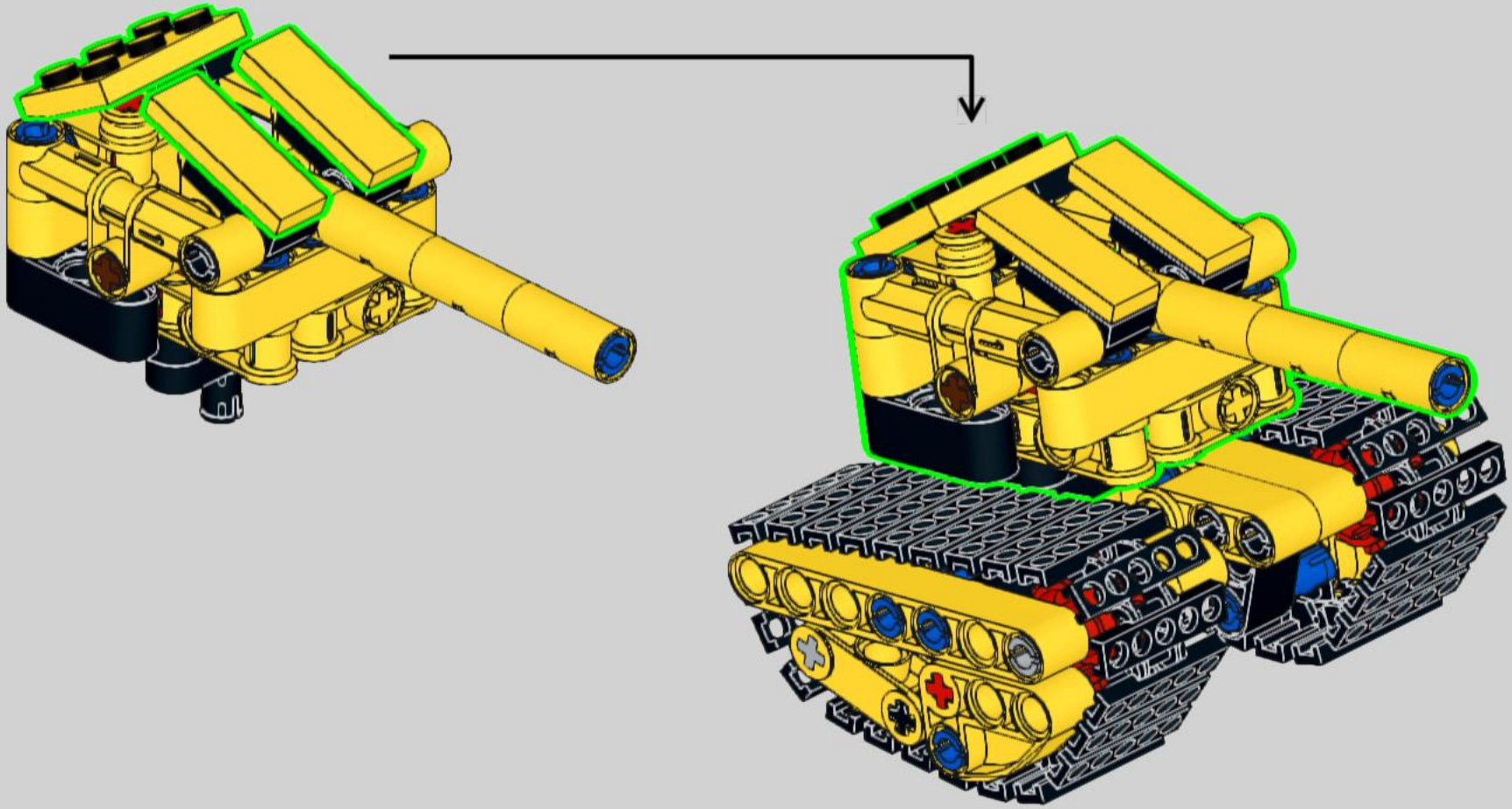

© Free instructions available at rebrickable.com. Instructions not for sale.

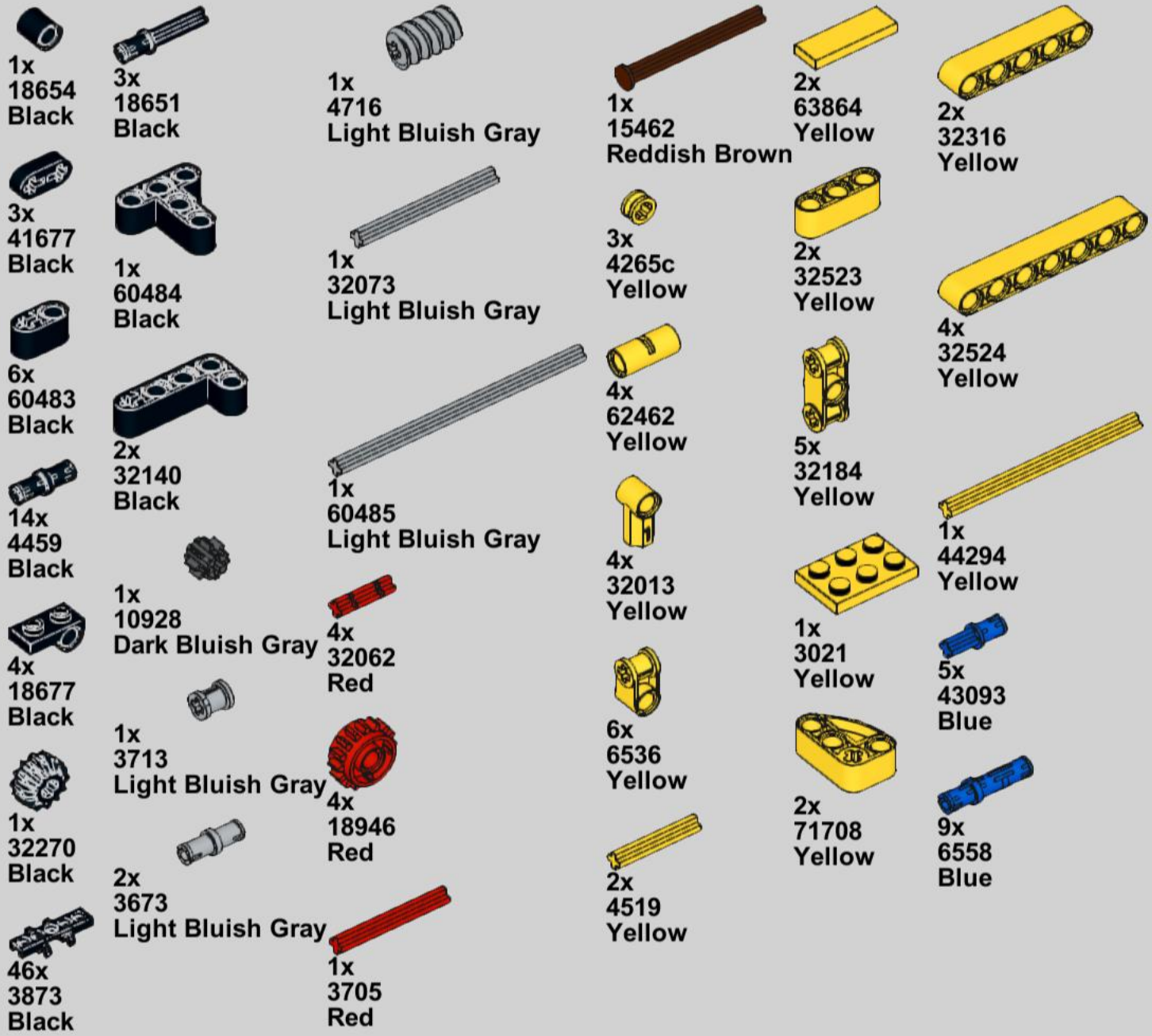
1x 18654 Black
3x 41677 Black
6x 60483 Black
14x 4459 Black
4x 18677 Black
1x 32270 Black
46x 3873 Black
3x 18651 Black
1x 60484 Black
2x 32140 Black
1x 10928 Dark Bluish Gray
1x 3713 Light Bluish Gray
2x 3673 Light Bluish Gray
1x 4716 Light Bluish Gray
1x 32073 Light Bluish Gray
1x 60485 Light Bluish Gray
4x 32062 Red
4x 18946 Red
1x 3705 Red
1x 15462 Reddish Brown
3x 4265c Yellow
4x 62462 Yellow
4x 32013 Yellow
6x 6536 Yellow
2x 4519 Yellow
2x 63864 Yellow
2x 32523 Yellow
5x 32184 Yellow
1x 3021 Yellow
2x 71708 Yellow
2x 32316 Yellow
4x 32524 Yellow
1x 44294 Yellow
5x 43093 Blue
9x 6558 Blue